z/OS

JES3 Initialization and Tuning Reference

SA22-7550-02

z/OS

JES3 Initialization and Tuning Reference

SA22-7550-02

Note
Before using this information and the product it supports, be sure to read the general information under "Notices" on page 225.

Third Edition, September 2002

This is a major revision of SA22-7550-01.

This edition applies to Version 1 Release 4 of z/OS (5694-A01), z/OS.e Version 1 Release 4 of z/OS.e (5655-G52), and to all subsequent releases and modifications until otherwise indicated in new editions.

Order documents through your IBM® representative or the IBM branch office serving your locality. Documents are not stocked at the address below.

IBM welcomes your comments. A form for readers' comments may be provided at the back of this document, or you may address your comments to the following address:

International Business Machines Corporation
Department 55JA, Mail Station P384
2455 South Road
Poughkeepsie, NY 12601-5400
United States of America

FAX (United States & Canada): 1+845+432-9405
FAX (Other Countries):
Your International Access Code +1+845+432-9405

IBMLink™ (United States customers only): IBMUSM10(MHVRCFS)
Internet e-mail: mhvrcfs@us.ibm.com
World Wide Web: http://www.ibm.com/servers/eserver/zseries/zos/webqs.html

If you would like a reply, be sure to include your name, address, telephone number, or FAX number.

Make sure to include the following in your comment or note:
- Title and order number of this document
- Page number or topic related to your comment

When you send information to IBM, you grant IBM a nonexclusive right to use or distribute the information in any way it believes appropriate without incurring any obligation to you.

© Copyright International Business Machines Corporation 1988, 2002. All rights reserved.
US Government Users Restricted Rights – Use, duplication or disclosure restricted by GSA ADP Schedule Contract with IBM Corp.

Contents

Figures vii

Tables ix

About This Document xi
Who Should Use This Document xi
How to Use This Document xi
Where to Find More Information xi
Accessing z/OS™ licensed documents on the Internet xi
Using LookAt to look up message explanations xii
Additional Information xiii

Summary of changes xv

Chapter 1. Initialization Statement Reference Summary 1
Coding Rules for Initialization Statements 1
Notation for Initialization Statement Format Descriptions 2
Summary of JES3 Initialization Statements 3
Correcting an Incorrect Parameter Value 17

Chapter 2. Initialization Statements . . 21
General Syntax 21
How to Read a Syntax Diagram 21
ACCOUNT (Job Accounting) 23
Statement Summary 24
Syntax 24
Parameters 24
Examples 25
BADTRACK (Bypass Defective Tracks) 25
Statement Summary 25
Syntax 26
Parameters 26
Example 26
BUFFER (JES3 Spool Work Buffers) 26
Statement Summary 27
Syntax 27
Parameters 28
Example 31
CIPARM (Converter/Interpreter Parameters) . . . 31
Statement Summary 31
Syntax 31
Parameters 32
Example 34
CLASS (JES3 Job Class Definition) 34
Statement Summary 35
Syntax 36
Parameters 37
Example 44
COMMDEFN (Communication SSI Definition Records) 44
Statement Summary 44
Syntax 44
Parameters 44
COMMENT (*) 45
Statement Summary 45
Syntax 45
Parameters 45
Examples 46
COMPACT (Compaction Table Definition) 46
Statement Summary 46
Syntax 47
Parameters 47
Example 48
CONSOLE for RJP Operator Consoles 49
Statement Summary 49
Syntax 49
Parameters 49
Examples 51
CONSTD (Console Service Standards) 52
Statement Summary 52
Syntax 52
Parameters 53
DEADLINE (Deadline Type Definition) 55
Statement Summary 55
Syntax 56
Parameters 56
Example 57
DESTDEF (Define Destinations for Inbound SYSOUT) 57
Statement Summary 57
Syntax 58
Parameters 58
Example 58
DEVICE (Define Processor Status) 58
Statement Summary 58
Syntax 59
Parameters 59
Example 59
DEVICE (Define a Network BSC line or CTC Connection) 61
Statement Summary 61
Syntax 61
Parameters 61
Example 63
DEVICE (Define I/O Devices) 63
Statement Summary 63
Syntax 67
Syntax, DEVICE, More Parameters (1) 69
Syntax, DEVICE, More Parameters (2) 71
Parameters 72
Examples 95
DYNALDSN (Dynamically Allocated Data Set Integrity) 97
Statement Summary 97
Syntax 97
Parameters 98
Examples 98

© Copyright IBM Corp. 1988, 2002

DYNALLOC (Dynamically Allocate Data Sets and Devices) . . . 98
Statement Summary . . . 99
Syntax . . . 100
Parameters . . . 100
Examples . . . 101
ENDINISH (End of Initialization Stream) . . . 101
Statement Summary . . . 101
Syntax . . . 101
Parameters . . . 102
ENDJSAM (End of JES3 I/O Statements) . . . 102
Statement Summary . . . 102
Syntax . . . 102
Parameters . . . 102
FORMAT (Format Spool Data Set) . . . 102
Statement Summary . . . 103
Syntax . . . 103
Parameters . . . 103
Example . . . 104
FSSDEF (Functional Subsystem Definition) . . . 105
Statement Summary . . . 105
Syntax . . . 106
Parameters . . . 107
Examples . . . 109
GROUP (Job-Class Group Definition) . . . 111
Statement Summary . . . 111
Syntax . . . 112
Parameters . . . 113
Examples . . . 118
HWSNAME (High Watermark Setup Names) . . . 119
Statement Summary . . . 119
Syntax . . . 120
Parameters . . . 120
INCLUDE (Include Initialization Stream Member) 124
Statement Summary . . . 124
Syntax . . . 125
Parameters . . . 125
Example . . . 125
INTDEBUG (Initialization Debugging Facility) . . . 126
Statement Summary . . . 126
Syntax . . . 126
Parameters . . . 127
Examples . . . 127
MAINPROC (Define a JES3 Main) . . . 127
Statement Summary . . . 127
Syntax . . . 129
Parameters . . . 129
MSGROUTE (MVS Message Route Table) . . . 132
Statement Summary . . . 132
Syntax . . . 133
Parameters . . . 133
NJECONS, (Console for NJE) . . . 135
Statement Summary . . . 135
Syntax . . . 135
Parameters . . . 135
NJERMT (JES3 Network Node Definition) . . . 136
Statement Summary . . . 136
Syntax . . . 138
Parameters . . . 139
Examples . . . 144
OPTIONS (JES3 Options) . . . 144
Statement Summary . . . 145
Syntax . . . 146
Parameters . . . 147
Example . . . 151
OUTSERV (Output Service Defaults and Standards) 151
Statement Summary . . . 151
Syntax . . . 152
Parameters . . . 153
Example . . . 157
RESCTLBK (Resident Control Block) . . . 157
Statement Summary . . . 157
Syntax . . . 157
Parameters . . . 157
Example . . . 158
RESDSN (Resident Data Set Names) . . . 158
Statement Summary . . . 158
Syntax . . . 158
Parameters . . . 159
Example . . . 159
RJPLINE (BSC Remote Job Processing Line) . . . 159
Statement Summary . . . 159
Syntax . . . 159
Parameters . . . 160
Examples . . . 161
RJPTERM (BSC Remote Job Processing Terminal) 161
Statement Summary . . . 162
Syntax . . . 162
Parameters . . . 163
3741 Restrictions and Limitations . . . 168
Examples . . . 168
RJPWS (SNA Work Station Characteristics) . . . 169
Statement Summary . . . 169
Syntax . . . 170
Parameters . . . 171
Example . . . 173
SELECT (Job Selection Mode) . . . 173
Statement Summary . . . 173
Syntax . . . 174
Parameters . . . 175
Example . . . 178
SETACC (Accessibility to Direct-Access Volumes) 179
Statement Summary . . . 179
Syntax . . . 180
Parameters . . . 180
Example . . . 180
SETNAME (Set JES3 Device Names) . . . 180
Statement Summary . . . 181
Syntax . . . 181
Parameters . . . 182
Examples . . . 183
SETPARAM (Set MDS Parameters) . . . 184
Statement Summary . . . 184
Syntax . . . 184
Parameters . . . 185
Example . . . 189
SETRES (Mount Direct-Access Volumes) . . . 189
Statement Summary . . . 189
Syntax . . . 190
Parameters . . . 190
Example . . . 190
SPART (Spool Partition Definition) . . . 190

Statement Summary 190
Syntax. 191
Parameters 191
Examples. 194
STANDARDS (Installation Defaults and Standards) 194
Statement Summary 194
Syntax. 195
Parameters 197
Example 206
SYSID (Define the Default MVS/BDT Node) . . . 206
Statement Summary 206
Syntax. 207
Parameters 207
SYSOUT (SYSOUT Class Characteristics) 207
Statement Summary 207
Syntax. 208
Parameters 209
TRACK (Preformatted Spool Data Set) 215
Statement Summary 215
Syntax. 216
Parameters 216
Example 217

Appendix A. Work Selection for JES3 219
JES3 Work Selection Processing Summary 219

Appendix B. Accessibility 223
Using assistive technologies 223
Keyboard navigation of the user interface 223

Notices 225
Programming Interface Information 226
Trademarks 226

Glossary 229

Index 239

Figures

1. DEVICE Statement Defaults and Associated Parameters 163

© Copyright IBM Corp. 1988, 2002

Tables

1. Initialization Statement Notation 2
2. Functional Summary of JES3 Initialization Statements 3
3. Initialization Statement Summary A thru L 4
4. Initialization Statement Summary M thru Z 9
5. Summary of Initialization Statements/Parameters Summary - No Longer Supported 16
6. Defaults Taken When Parameters Values Are Not Valid 18
7. ACCOUNT Summary 24
8. BADTRACK Summary 25
9. BUFFER Summary 27
10. CIPARM Summary 31
11. CLASS Summary 35
12. COMMDEFN Summary 44
13. Comment (*) Summary. 45
14. COMPACT Summary 46
15. CONSOLE (RJP) Summary 49
16. Valid Destination Classes and Their Corresponding Routing Codes 50
17. CONSTD Summary 52
18. DEADLINE Summary 55
19. DESTDEF Summary 57
20. DEVICE (Processor Status) Summary 58
21. DEVICE (Network BSC line) 61
22. DEVICE (Define I/O Device) Summary 63
23. DEVICE (Define I/O Device) Summary - cont. 66
24. Valid Parameters by Device for the DEVICE Initialization Statement. 72
25. I/O Generic Device Type Names Supported in a JES3 Complex 74
26. Changing the FSSNAME Parameter during a Hot Start with Refresh 79
27. Changing the FSSNAME Parameter during a Hot Start with Refresh 83
28. DYNALDSN Summary. 97
29. DYNALLOC Summary. 99
30. ENDINISH Summary 101
31. ENDJSAM Summary 102
32. FORMAT Summary 103
33. FSSDEF Summary 105
34. GROUP Summary 111
35. HWSNAME Summary 119
36. Tape Drive Device Types Eligible for Allocation. 120
37. HWSNAME Statements for 3400-Series Tape Drive Configurations 122
38. INCLUDE Summary 124
39. INTDEBUG Summary 126
40. MAINPROC Summary 127
41. MSGROUTE Summary 132
42. MSGROUTE Summary - Message from the Local 134
43. MSGROUTE Summary - Message from the Global 134
44. NJECONS Summary 135
45. NJERMT Summary 136
46. OPTIONS Summary 145
47. OUTSERV Summary 151
48. RESCTLBK Summary 157
49. RESDSN Summary. 158
50. RJPLINE Summary 159
51. RJPTERM Summary 162
52. CONSOLE Statement Parameters Associated with RJPTERM 164
53. RJPWS Summary 169
54. SELECT Summary 173
55. JOBMIX Default Values 177
56. SETACC Summary. 179
57. SETNAME Summary 181
58. SETPARAM Summary 184
59. SETRES Summary 189
60. SPART Summary 190
61. STANDARDS Summary 194
62. SYSID Summary 206
63. SYSOUT Summary. 207
64. TRACK Summary 215
65. JES3 Work Selection Processing Summary 219

© Copyright IBM Corp. 1988, 2002

About This Document

This document supports z/OS (5694–A01) and z/OS.e (5655–G52).

This document provides reference information about JES3 initialization statements used to initialize, manage, and tune JES3.

Who Should Use This Document

JES3 system programmers or anyone who is responsible for initializing or tuning JES3 should use this document.

How to Use This Document

This document describes initialization statements and parameters that you can use to configure your JES3 complex. These statements and parameters enable you to define to JES3 your installation's job management policies and the resources that JES3 can use.

Initialization statements appear in alphabetical order with the statement name appearing at the top of each page. This arrangement allows you to quickly find a statement description without going to the index.

Many statement parameters influence or change the values of other initialization parameters. For example, a particular parameter coded on one statement may override a parameter coded on another statement. Table 3 and Table 4, in Chapter 1, "Initialization Statement Reference Summary", identify interrelated statements and parameters. This table also lists the default values for parameters that you omit from your initialization stream.

If you specify an invalid subparameter on certain JES3 initialization statements, JES3 substitutes the subparameters default value and continues to run. To find out which initialization statements and subparameters select defaults, see Table 6.

Where to Find More Information

The following table lists documents that contain information related to the information provided in this document.

When this document references information in other documents, the shortened version of the document title is used. The following table shows the shortened titles, complete titles, and order numbers of the documents that are not listed in *z/OS Information Roadmap*. Refer to that document for all z/OS documents.

Short Title	Title	Order Number
Print Services Facility/MVS System Programmer's Guide	*Print Services Facility/MVS System's Programmer Guide*	SH35-0091

Accessing z/OS™ licensed documents on the Internet

z/OS licensed documentation is available on the Internet in PDF format at the IBM Resource Link™ Web site at:

© Copyright IBM Corp. 1988, 2002

http://www.ibm.com/servers/resourcelink

Licensed documents are available only to customers with a z/OS license. Access to these documents requires an IBM Resource Link user ID and password, and a key code. With your z/OS order you received a Memo to Licensees, (GI10-0671), that includes this key code. [1]

To obtain your IBM Resource Link user ID and password, log on to:
http://www.ibm.com/servers/resourcelink

To register for access to the z/OS licensed documents:

1. Sign in to Resource Link using your Resource Link user ID and password.
2. Select **User Profiles** located on the left-hand navigation bar.

Note: You cannot access the z/OS licensed documents unless you have registered for access to them and received an e-mail confirmation informing you that your request has been processed.

Printed licensed documents are not available from IBM.

You can use the PDF format on either **z/OS Licensed Product Library CD-ROM** or IBM Resource Link to print licensed documents.

Using LookAt to look up message explanations

LookAt is an online facility that allows you to look up explanations for most messages you encounter, as well as for some system abends and codes. Using LookAt to find information is faster than a conventional search because in most cases LookAt goes directly to the message explanation.

You can access LookAt from the Internet at:
http://www.ibm.com/eserver/zseries/zos/bkserv/lookat/

or from anywhere in z/OS where you can access a TSO/E command line (for example, TSO/E prompt, ISPF, z/OS UNIX System Services running OMVS). You can also download code from the *z/OS Collection* (SK3T-4269) and the LookAt Web site that will allow you to access LookAt from a handheld computer (Palm Pilot VIIx suggested).

To use LookAt as a TSO/E command, you must have LookAt installed on your host system. You can obtain the LookAt code for TSO/E from a disk on your *z/OS Collection* (SK3T-4269) or from the **News** section on the LookAt Web site.

Some messages have information in more than one document. For those messages, LookAt displays a list of documents in which the message appears.

1. z/OS.e™ customers received a Memo to Licensees, (GI10-0684) that includes this key code.

Additional Information

Additional information about z/OS elements can be found in the following documents.

Title	Order Number	Description
z/OS Introduction and Release Guide	GA22-7502	Describes the contents and benefits of z/OS as well as the planned packaging and delivery of this new product.
z/OS and z/OS.e Planning for Installation	GA22-7504	Contains information that lets users: • Understand the content of z/OS • Plan to get z/OS up and running • Install the code • Take the appropriate migration actions • Test the z/OS system
z/OS Information Roadmap	SA22-7500	Describes the information associated with z/OS including z/OS documents and documents for the participating elements.
z/OS Summary of Message Changes	SA22-7505	Describes the changes to messages for individual elements of z/OS. **Note:** This document is provided in softcopy only on the message bookshelf of the z/OS collection kit.

Summary of changes

Summary of changes
for SA22-7550-02
z/OS Version 1 Release 4

This document contains information previously presented in *z/OS JES3 Initialization and Tuning Reference*, SA22-7550-01, which supports z/OS Version 1 Release 2.

New information:

- An appendix with z/OS product accessibility information has been added.
- Information is added to indicate that this document supports z/OS.e.

Changed information:

- Added rule to Coding Rules for Initialization Statements. See Chapter 1, "Initialization Statement Reference Summary" on page 1.
- Added notes to TERM and START parameters for FSSDEF statement. See "FSSDEF (Functional Subsystem Definition)" on page 105.
- Added SPART, DEFCLASS and XNAMEREQ parameters to NJERMT statement. See "NJERMT (JES3 Network Node Definition)" on page 136.
- Changes to WANTDUMP parameter for OPTIONS statement. See "OPTIONS (JES3 Options)" on page 144.
- Changes to MAINPROC statement. See "MAINPROC (Define a JES3 Main)" on page 127.
- Changes to MSGROUTE statement. See Table 41 on page 132.
- Changes to OUTSERV statement. See Table 47 on page 151.
- Added the new JCL SYSIN DD limit parameter and description of FAILURE parameter to STANDARDS statement. See "STANDARDS (Installation Defaults and Standards)" on page 194.

This document contains terminology, maintenance, and editorial changes. Technical changes or additions to the text and illustrations are indicated by a vertical line to the left of the change.

Starting with z/OS V1R2, you may notice changes in the style and structure of some content in this document—for example, headings that use uppercase for the first letter of initial words only, and procedures that have a different look and format. The changes are ongoing improvements to the consistency and retrievability of information in our documents.

Summary of changes
for SA22-7550-01
z/OS Version 1 Release 2

This document contains information previously presented in *z/OS JES3 Initialization and Tuning Reference*, SA22-7550-00, which supports z/OS Version 1 Release 1.

New and changed information:

- BUFFER Initialization Statement

© Copyright IBM Corp. 1988, 2002

The FD= keyword parameter has been removed. JES3 now manages FD entries dynamically.

- CLASS Initialization Statement

  A new optional keyword (JESMSG=) is added to the CLASS initialization statement so that the installation allow or suppress the writing of execution messages to a job's JESMSGLG data set.

  A new optional keyword (SPIN=) is added to the CLASS initialization statement so that the installation can spin off or suppress the JESlog data sets, JESMSGLG and JESYSMSG, while a job executes. This ability to spin off JESlog output during a job's execution allows installations to monitor long running jobs.

- OPTIONS Initialization Statement
  - The maximum number of job ids in a JES3 system is increased to 999,999 by using the JOBNO= keyword.
  - New keyword parameter is added, DUPJOBNM= to support multiple batch jobs.
  - Clarifications added on processing active jobs with respect to your installation.

- STANDARDS Initialization Statement

  New keyword parameter, ALTJCL= is added to indicate how JES3 is to process JES3 job control statements.

- Use of Advance Function Presentation (AFP) Terminology

  AFP was first introduced in 1984 to support the IBM 3800 Model 3 high-speed printer. AFP now supports new printing technology and new functions. Within JES3 initialization, the IBM 3800 Model 3 is not a unique AFP printer. JES3 provides output data to other AFP printers as well. All references to unique model of IBM AFP printers have been replaced with just the term, AFP printer, where appropriate.

- General Service and Editorial Changes

  This document includes terminology, maintenance, and editorial changes. Technical changes or addtions to the text and illustrations are indicated by a vertical line to the left of the change.

Chapter 1. Initialization Statement Reference Summary

This section describes the rules for coding JES3 initialization statements and explains the notation used in the format descriptions for each statement. It also provides quick reference charts that summarize each initialization statement. For information on creating or modifying an initialization stream, organizing the initialization stream, and testing the initialization stream, see *z/OS JES3 Initialization and Tuning Guide*.

Coding Rules for Initialization Statements

You must observe the following rules when coding initialization statements:

- Code the statement name and parameters in columns 1-71. Column 72 must be blank if the statement is complete; column 72 may be blank or non-blank if the statement is continued. JES3 ignores columns 73-80.
- Use commas to separate the statement name from the first parameter and to separate one parameter from another.
- If you code a keyword parameter more than once, JES3 usually uses the last value coded. In some cases, however, JES3 treats a duplicate keyword as a continuation of a previously coded keyword of the same name. In other cases, when JES3 encounters a duplicate keyword, it issues a diagnostic message.
- If you wish to continue an initialization statement (individual statement descriptions specify whether a statement can be continued):
  - The last item you code in columns 1-71 must be a complete parameter (a parameter and all of its subparameters) followed by a comma or a subparameter followed by a comma.
  - If one or more blanks follows a comma, that statement is considered continued, and any data beyond the blank(s) is treated as a comment. If a comma appears in column 71 following a statement parameter, that statement is considered continued.
  - Column 72 optionally may contain any non-blank character if the statement is being continued. Use of a non-blank character in a statement that is *not* to be continued results in an error and message IAT3253 is issued.
  - On the continuation statement you may start coding in any column. The statement can complete on this line or be continued.
- You can place any number of comment statements (indicated by an asterisk in column 1) anywhere in the initialization stream. Comment statements cannot be continued; however, multiple comment statements can be included consecutively.
- Initialization statements can contain embedded comments provided that at least one blank separates the last parameter and the comment. For initialization statements that are continued, at least one blank must follow the continuation comma (with the exception of a comma in column 71).
- JES3 does not evaluate symbols in initialization statements. Symbol names, including ampersands and periods, are handled literally. In limited cases (such as the DSN= parameter on the DYNALLOC statement) where the use of symbols in the parameter does not cause the parameter to exceed its maximum length, symbols will be passed to another system component to perform the evaluation, provided that system component supports a symbol for the parameter in question, but in general the use of symbols is not supported by

© Copyright IBM Corp. 1988, 2002

JES3. Error messages may or may not be issued, depending on whether the statement in question can tolerate the use of ampersands and/or periods within its parameters. In cases where errors are not issued and the value is defined literally, the resulting definition may not be usable by JES3.

- You should not rely on parameter default values to be sufficient for your environment. Test each default value used, and be alert to performance problems that may arise as your environment changes.

Examples: The following are examples of valid initialization statement continuation:

```
CLASS,NAME=ABC,DEF=YES,
MDEPTH=(SY1,10)
CLASS,NAME=ABC,GROUP=TESTGP,SYSTEM=(SY1,SY2)

CLASS,NAME=ABC,GROUP=TESTGP,SYSTEM=(SY1,SY2),
DEF=YES

CLASS,NAME=ABC,DEF=YES,    This is a comment
      MDEPTH=(SY1,10)

CLASS,NAME=ABC,DEF=YES,    This is a comment
*This is a comment line
      MDEPTH=(SY1,         This is a comment
*This is a comment line
                 10)
```

Notation for Initialization Statement Format Descriptions

Table 1. Initialization Statement Notation

Character	Meaning
comma**,** equal sign**=** numbers**123** parentheses**( )** period**.** plus sign**+** question mark**?** uppercase**XYZ**	Code uppercase letter or words exactly as they appear in the syntax figures. Characters shown to the left must be coded exactly as they appear.
Braces**{ }**	Braces group related items. You must code only one of the items grouped within the braces. Do not code the braces.
Variables**dev**	Lowercase letters and words represent variables for which you must substitute a value.
Brackets **[ ]**	Brackets group optional items. You can code none, one, some, or all of the items grouped within brackets. Do not code the brackets.
Ellipsis **...**	An ellipsis (three consecutive periods) indicates that you can code the preceding item more than once. If the ellipsis follows a group of items that are enclosed in parentheses or brackets, you can code the entire group more than once.

Table 1. Initialization Statement Notation (continued)

Character	Meaning
Underline **10**	An underlined subparameter is the default value. If you do not specify a value for a subparameter, JES3 will use the default.

Summary of JES3 Initialization Statements

Table 2. Functional Summary of JES3 Initialization Statements

Statement	Function
ACCOUNT	Specifies default DSP accounting information.
BADTRACK	Identifies a defective track on spool and prevents its use for subsequent allocations.
BUFFER[3]	Establishes the JES3 buffer pool and the size of JES3 DASD records.
CIPARM	Specifies variable converter/interpreter parameter default values.
CLASS	Specifies the characteristics of the JES3 job class.
COMMDEFN	Identifies the VTAM/JES3 interface.
COMMENT	Provides the facility for comments in the initialization stream.
COMPACT	Identifies a compaction table.
CONSOLE	Specifies the characteristics of a RJP workstation console and assigns message classes to it.
CONSTD	Defines standards for console configuration.
DEADLINE	Establishes deadline scheduling algorithms.
DESTDEF	Specifies how inbound SYSOUT data sets from other NJE nodes are to be processed.
DEVICE	Specifies the characteristics of each device defined to JES3.
DYNALDSN	Identifies protection requirements for dynamically allocated data sets or permanently-resident devices.
DYNALLOC	Dynamically allocates a data set or a device.
ENDINISH[1]	Identifies the end of the initialization stream.
ENDJSAM[1]	Identifies the end of the JES3 I/O statements which precede the bulk of the initialization stream.
FORMAT[2]	Requests formatting for the JES3 spool data set.
FSSDEF	Defines the characteristics of a functional subsystem.
GROUP	Specifies the characteristics of JES3 job class groups.
HWSNAME	Identifies groups of I/O units for high watermark setup.
INCLUDE	Selects and includes segments of an initialization stream into the primary initialization stream.
INTDEBUG	Provides the facility to generate a dump associated with an initialization stream error message.
MAINPROC[1,4]	Identifies and specifies the characteristics of each main in the JES3 complex.
MSGROUTE	Assigns MVS message routing codes for each main.
NJECONS	Defines the message class to which JES3 Networking is to send network messages.
NJERMT	Defines a node in a network of nodes.
OPTIONS[3]	Specifies certain options for the JES3 system.
OUTSERV	Specifies output service defaults and standards.
RESCTLBK	Specifies that main storage be preallocated for the high-usage function control table (FCT).
RESDSN	Specifies the names of frequently used permanently resident data sets.
RJPLINE	Specifies the characteristics of a single BSC line that the JES3 global will use for RJP.
RJPTERM	Specifies the characteristics of a remote terminal for BSC remote job processing.
RJPWS	Specifies the characteristics of a remote work station for SNA RJP.
SELECT	Specifies the scheduling parameters for job selection modes.
SETACC	Defines nonshared permanently resident direct access volumes prior to main initialization.
SETNAME	Specifies groups of devices within device types.
SETPARAM	Specifies main device scheduler (MDS) parameters for allocating I/O devices.
SETRES	Specifies which direct access volumes are to be made JES3 mounted at main initialization.
SPART	Defines and names a spool partition.

Table 2. Functional Summary of JES3 Initialization Statements (continued)

Statement	Function
STANDARDS	Specifies standard default values and job options for the JES3 complex.
SYSID	Defines the default MVS/Bulk Data Transfer (MVS/BDT) node for the JES3 complex.
SYSOUT	Specifies the characteristics of a SYSOUT class.
TRACK[2]	Identifies a formatted volume that is allocated for the spool data set.

Notes:

1. Required.
2. Unformatted spool data sets need a FORMAT statement; formatted spool data sets need either a FORMAT or TRACK statement.
3. Certain parameters can only be changed during a cold start. See the statement summary for details.
4. Cannot change the order of MAINPROC statements across a warm start.

Table 3. Initialization Statement Summary A thru L

Initialization Statement	Req or Opt	Parameter	Parameter Defaults	Related Statement (Parameter)	Start Type to Modify	Page
ACCOUNT	Opt	account information	(0,0,0,0)		W, C, HR	24
BADTRACK	Opt	DDNAME		FORMAT(DDNAME); TRACK(DDNAME); DYNALLOC(DDN)	W, C	26
		CYL			W, C	26
		TRK			W, C	26
BUFFER	Opt	BUFSIZE	4084	DEVICE(RECORDS); FORMAT(DDNAME); OPTIONS(SE) (JOBNO)	C	28
		PAGES	1024,128,512		W, C	28
		GRPSZ	30	SPART(GRPSZ); SYSOUT(TRKGRPS)	W, C	29
		MINBUF	16		W, C, HR	29
		SPLIM	10,25	SPART(SPLIM)	W, C	29
		TRUNC	YES	SYSOUT(TRUNC)	W, C, HR	30
CIPARM	Opt	PARM	00000300025631 E00011A	STANDARDS(PRTY); SYSOUT(CLASS)	W, C, HR	32
		PARMID	01	STANDARDS(TSOPMID, STCPMID, INTPMID)	W, C, HR	34
		REGION	256K		W, C, HR	34
		COMMAND	IGNORE		W, C, HR	34
		AUTH	ALL		W, C, HR	34

Table 3. Initialization Statement Summary A thru L (continued)

Initialization Statement	Req or Opt	Parameter	Parameter Defaults	Related Statement (Parameter)	Start Type to Modify	Page
CLASS	Opt	CIBATCH	ANY	STANDARDS (CIBATCH)	W, C, HR	37
		CIDEMAND	ANY	STANDARDS (CIDEMAND)	W, C, HR	38
		NAME	JS3BATCH (see statement)	CLASS parameter on //*MAIN	W, C, HR	37
		DEF			W, C, HR	38
		FAILURE		STANDARDS (FAILURE)	W, C, HR	38
CLASS	Opt	GROUP	JS3BATCH	GROUP(NAME) (DEF)	W, C, HR	39
		IORATE	MED	SELECT(JOBMIX) (CHOICE)	W, C, HR	39
		JESMSG	STANDARDS (JESMSG) setting	STANDARDS (JESMSG)	W, C, HR	39
		JOURNAL	NO	JOURNAL parameter on //*MAIN	W, C, HR	39
		MDEPTH		MAINPROC(NAME)	W, C, HR	40
		MLIMIT		MAINPROC(NAME)	W, C, HR	40
		PRTY	PRTY on STANDARDS	STANDARDS(PRTY)	W, C, HR	41
CLASS	Opt	SDEPTH			W, C, HR	41
		SPART	default spool partition	SPART(NAME)	W, C, HR	41
		SPIN	NO	Job JCL JESLOG= keyword value	W, C, HR	41
		SYSTEM	ANY	MAINPROC(NAME)	W, C, HR	42
		TDEPTH			W, C, HR	43
		TLIMIT			W, C, HR	43
		TRKGRPS	1,2		W, C, HR	43
COMMDEFN	Opt	APPLID	JES3		W, C, HR	44
		P	Null character string		W, C, HR	44
		LU	255		W, C, HR	45
* (Comment)	Opt	None			W, C, HR	45
COMPACT	Opt	NAME		COMPACT on RJPWS	W, C, HR	47
		MCCT			W, C, HR	48
		CHAR			W, C, HR	48
		DEFAULT	N		W, C, HR	48

Table 3. Initialization Statement Summary A thru L (continued)

Initialization Statement	Req or Opt	Parameter	Parameter Defaults	Related Statement (Parameter)	Start Type to Modify	Page
CONSOLE (RJP)	Opt	JNAME		N= on RJPWS; N= on RJPTERM	W, C, HR	49
		TYPE			W, C, HR	50
		DEST			W, C, HR	50
		LL	120		W, C, HR	51
		LEVEL	0		W, C, HR	51
		SAVEMSG	YES		W, C, HR	51
CONSTD	Opt	EDIT	(",#,,)		W, C	53
		GLOBMPF	NO		W, C	53
		CIFSS	FSSDEF		W, C	54
		SYN	8		W, C	54
		PLEXSYN	*		W, C	54
		DLOG	ON		W, C	55
DEADLINE	Opt	type		//*MAIN	W, C, HR	56
DESTDEF	Opt	USERID		NJERMT (NETHOLD)	W, C, HR	58
		DEVICE		NJERMT (NETHOLD)	W, C, HR	58
DEVICE (processor status)	Opt	DTYPE				59
		JNAME		MAINPROC(NAME)	W, C, HR	59
		JUNIT	main2,,,ON	MAINPROC(NAME)	W, C, HR	59
DEVICE (Network)	Opt	DTYPE			W, C, HR	61
		JNAME		NJERMT(LINE)	W, C, HR	61
		JUNIT	TP,ON	MAINPROC(NAME)	W, C, HR	62
		NUMDEV			W, C, HR	62
DEVICE (I/O)	Req	ALTPM			W, C, HR	76
		BURST	YES		W, C, HR	77
		CARRIAGE	YES,STANDARD	OUTSERV (CARRIAGE)	W, C, HR	77
		CB	N		W, C, HR	78
		CHARS	YES,STANDARD	OUTSERV(CHARS)	W, C, HR	78
		CHNSIZE	DS		W, C, HR	78
		CKPNT	200,10000,2000,1000		W, C, HR	79
		CKPNTPG	200		W, C, HR	79
		CKPNTSEC	200		W, C, HR	79

Table 3. Initialization Statement Summary A thru L (continued)

Initialization Statement	Req or Opt	Parameter	Parameter Defaults	Related Statement (Parameter)	Start Type to Modify	Page
DEVICE (I/O)	Req	COPYMARK	C		W, C, HR	80
		DGROUP	LOCAL	SYSOUT(DEST)	W, C, HR	80
		DGRPONLY	NO		W, C, HR	80
		DTYPE		NJERMT(LINE)	W, C, HR	81
		DYNAMIC	NO (NON FSS=YES)		W, C, HR	81
		FEATURES			W, C, HR	82
		FLASH	YES,STANDARD	OUTSERV(FLASH)	W, C, HR	82
		FORMS	YES,STANDARD	OUTSERV(FORMS) (CDSTOCK); SYSOUT(FORMS)	W, C, HR	82
		FSSNAME	JNAME specification	FSSDEF(FSSNAME)	W, C, HR	83
DEVICE (I/O)	Req	HEADER	YES	SYSOUT(DEST)	W, C, HR	83
		JNAME		NJERMT(LINE); SYSOUT(DEST)	W, C, HR	83
		JUNIT	destclass,ON	CONSOLE(DEST); MAINPROC(NAME)	W, C, HR	84
		LDENS	NO		W, C, HR	85
		LINELIM		OUTSERV(WS=L)	W, C, HR	85
		MODE	COMP (FSS with FSSNAME)		W, C, HR	86
		MODIFY	YES,STANDARD	OUTSERV(MODIFY)	W, C, HR	86
		NPRO	STANDARD		W, C, HR	86
		NUMDEV			W, C, HR	87
DEVICE (I/O)	Req	OPACTLOG	YES		W, C, HR	88
		PAGELIM	0		W, C, HR	88
		PDIR	BDS		W, C, HR	89
		PM	FSS: (LINE,PAGE); COMP: LINE		W, C, HR	89
		RDFEAT	Y		W, C, HR	89
		RECORDS	1 (2 for 3211)	BUFFER(BUFSIZE)	W, C, HR	90
		SELECT	EDS=NO		W, C, HR	90
		SETUPMSG	YES with FSS		W, C, HR	91
		STACKER	YES,STANDARD	OUTSERV(STACKER)	W, C, HR	91

Table 3. Initialization Statement Summary A thru L (continued)

Initialization Statement	Req or Opt	Parameter	Parameter Defaults	Related Statement (Parameter)	Start Type to Modify	Page
DEVICE (I/O)	Req	SVF			W, C, HR	91
		TRAIN	YES,STANDARD	OUTSERV(TRAIN); SYSOUT(TRAIN)	W, C, HR	92
		WC	STANDARD		W, C, HR	92
		WS	STANDARD		W, C, HR	92
		XLATE	YES (NO for IBM 3211, IBM 4245, and IBM 4248 devices)		W, C, HR	93
		XTYPE	TA,RM	SETNAME(XTYPE); SETACC(VOL)	W, C, HR	93
		XUNIT	destclass,ON	MAINPROC(NAME); SETPARAM(MDSLOG)	W, C, HR	94
DYNALDSN	Opt	PROTECT	(*)		W, C, HR	98
		BYPASS			W, C, HR	98
DYNALLOC	Opt	DDN		FORMAT(DDNAME); TRACK(DDNAME); (BADTRACK)DDNAME	W, C, HR	100
		DSN			W, C, HR	100
		UNIT			W, C, HR	100
		VOLSER			W, C, HR	101
ENDINISH	Req				W, C, HR	102
ENDJSAM	Req				W, C, HR	102
FORMAT	Req	DDNAME		BUFFER(BUFSIZE); DYNALLOC(DDN); BADTRACK(DDNAME)	W, C	103
		SPART		SPART(NAME)	W, C	103
		STT	Allocates center 2 tracks to STT		Cold Only	103
		STTL	Allocates center 2 tracks to STT		Cold Only	104
FSSDEF	Opt	DSPCNT	2,1		W, C, HR	109
		FSSNAME		DEVICE(FSSNAME)	W, C, HR	107
		MAXASST	0		W, C, HR	109
		MSGDEST	42(JES)		W, C, HR	107
		PNAME	For CI FSS: JES3CI	STANDARDS (STCPROC)	W, C, HR	108
		START	YES		W, C, HR	109
		SYSTEM	For CI FSS: name of global	MAINPROC(NAME)	W, C, HR	108
		TERM	NO		W, C, HR	108
		TYPE			W, C, HR	107

Table 3. Initialization Statement Summary A thru L (continued)

Initialization Statement	Req or Opt	Parameter	Parameter Defaults	Related Statement (Parameter)	Start Type to Modify	Page
GROUP	Opt	NAME		CLASS,SELECT (GROUP)	W, C, HR	113
		MODE	JES		W, C, HR	113
		EXRESC	alopt/unalopt: DEMAND	MAINPROC(NAME); SETNAME (POOLNAMS); SETNAME (NAMES)	W, C, HR	113
		BAR	16		W, C, HR	116
		DEF	JS3BATCH (see statement)	CLASS(GROUP)	W, C, HR	116
		DEVPOOL		SETNAME (POOLNAMS); SETNAME(NAMES);	W, C, HR	117
		JSPAN	ALL		W, C, HR	117
HWSNAME	Opt	TYPE		SETNAME(NAMES); STANDARDS(SETUP);	W, C, HR	120
INCLUDE	Opt	MEMBER			W, C, HR	125
INTDEBUG	Opt				W, C, HR	127

W - warm start
C - cold start
HR - hot start with refresh

Table 4. Initialization Statement Summary M thru Z

Initialization Statement	Req or Opt	Parameter	Parameter Defaults	Related Statement (Parameter)	Start Type to Modify	Page
MAINPROC	Req	FIXPAGE	5		W, C, HR	129
		ID	R		W, C, HR	130
		JESMSGLMT	0,10		W, C, HR	130
		MDEST	65(M1)	CONSOLE(DEST)	W, C, HR	130
		NAME		CLASS(MDEPTH) (MLIMIT) (SYSTEM); DEVICE(XUNIT) (JUNIT); GROUP(EXRESC); FSSDEF(SYSTEM); MSGROUTE(MAIN); SETACC(VOL)	W, C, HR	129
		PRTPAGE	smaller of 512 or (16 x no. of spool data sets)		W, C	130
		SELECT	JS3BATCH	SELECT(NAME)	W, C 131	131

Table 4. Initialization Statement Summary M thru Z (continued)

Initialization Statement	Req or Opt	Parameter	Parameter Defaults	Related Statement (Parameter)	Start Type to Modify	Page
MAINPROC	Req	SPART	default spool partition	SPART(NAME)	W, C	131
		SYSTEM			W, C	129
		TRKGRPS	1,2		W, C	131
		USRPAGE	4		W, C	132
MSGROUTE	Opt	MAIN		MAINPROC(NAME)	W, C, HR	133
		routecode		CONSOLE(DEST)	W, C, HR	133
		J			W, C, HR	134
NJECONS	Opt	CLASS	108(S12)	CONSOLE(DEST)	W, C, HR	135
NJERMT	Opt	NAME			W, C, HR	139
		NAME		OPTIONS(XCFGRPNM)	W, C	139
		ALIAS			W, C, HR	139
		AUTO	NO		W, C, HR	140
		BDTID		SYSID(NJENAME) as defined in the MVS/BDT initialization stream	W, C, HR	140
		BFSIZ	400	BUFFER(BUFSIZE)	W, C, HR	140
		CTC	NO		W, C, HR	140
		EXPWD			W, C, HR	141
		EXSIG			W, C, HR	141
NJERMT	Opt	HOME	NO	OPTIONS(XCFGRPNM)	W, C, HR	141
		LINE		DEVICE(DTYPE) (JNAME)	W, C, HR	141
		MAXLINE	1		W, C, HR	141
		NETHOLD	NO		W, C, HR	141
		NJEPR	3		W, C, HR	142
		NJEPU	3		W, C, HR	142
		PATH			W, C, HR	142
		PWCNTL	SENDCLR		W, C, HR	143
		PRTDEF	Print class A	SYSOUT(CLASS)	W, C, HR	142
NJERMT	Opt	PRTTSO	print class A		W, C, HR	142
		PRTXWTR	print class A		W, C, HR	142
		PUNDEF	Print class B		W, C, HR	142
		PWD			W, C, HR	142
		RETRYCT	20		W, C, HR	143
		SIG			W, C, HR	143
		STREAM	1		W, C, HR	143
		TYPE	BSC		W, C, HR	143
		RDLY	5		W, C, HR	140

Table 4. Initialization Statement Summary M thru Z (continued)

Initialization Statement	Req or Opt	Parameter	Parameter Defaults	Related Statement (Parameter)	Start Type to Modify	Page
NJERMT	Opt	SPART			W, C, HR	143
		XNAMEREQ			W, C, HR	144
		DEFCLASS			W, C, HR	140
OPTIONS	Opt	DUMP	JES		W, C, HR	147
		DUPJOBNM	NO		W, C, HR	148
		DUMPLINS	24576		W, C, HR	149
		WANTDUMP	YES		W, C, HR	149
		INTRDR	20		W, C, HR	149
		JOBNO	1,9999,9999	BUFFER(BUFSIZE)	W, C, HR	149
		MT	OFF		W, C, HR	150
		SE	10	BUFFER(BUFSIZE)	**Cold Only**	150
		XCFGRPNM	nodename on home node or 'N1' if no home node	NJERMT(NAME)	W, C	151
OUTSERV	Opt	CARRIAGE	6	SYSOUT(CHARS); DEVICE(CARRIAGE)	W, C, HR	153
		CB	N		W, C, HR	153
		CDSTOCK	5081	DEVICE(FORMS)	W, C, HR	153
		CHARS	GS10	DEVICE(CHARS)	W, C, HR	153
		FLASH	NONE,255	DEVICE(FLASH)	W, C, HR	153
		FORMS	1PRT	DEVICE(FORMS); SYSOUT(FORMS)	W, C, HR	154
		MODIFY	NONE,0	DEVICE(MODIFY)	W, C, HR	154
		OUTLIM	16777215		W, C, HR	154
		OUTSVFCT	1		W, C, HR	154
OUTSERV	Opt	SNAGROUP	NO	SYSOUT(DSISO)	W, C, HR	154
		STACKER	C	DEVICE(STACKER)	W, C, HR	155
		TRAIN	PN	DEVICE(TRAIN); SYSOUT(TRAIN)	W, C, HR	155
		THRESHLD	-1	SYSOUT(THRESHLD)	W, C, HR	155
		WC	Null list, all data sets selected		W, C, HR	156
		WS	D,T,F,C,U,FL,CM, SS,PM	DEVICE(LINELIM)	W, C, HR	156
		NPRO	90		W, C, HR	156
RESCTLBK	Opt	FCT	0		W, C, HR	157
RESDSN	Opt	DSN			W, C, HR	159

Table 4. Initialization Statement Summary M thru Z (continued)

Initialization Statement	Req or Opt	Parameter	Parameter Defaults	Related Statement (Parameter)	Start Type to Modify	Page
RJPLINE	Opt	N			W, C, HR	160
		A			W, C, HR	160
		F	Transparency feature assumed		W, C, HR	160
		G	Eight blanks (no group name)		W, C, HR	160
		I=B/A	I=A		W, C, HR	160
		I=Y/N	I=Y		W, C, HR	160
		O	*START command required		W, C, HR	161
		P	Eight blanks (no PW protection)		W, C, HR	161
		S	2400		W, C, HR	161
RJPLINE	Opt	T		RJPTERM(N); CONSOLE(JNAME)	W, C, HR	161
RJPTERM	Opt	N		RJPLINE(T)	W, C, HR	164
		T			W, C, HR	164
		B	400/512		W, C, HR	164
		C	R/S	DEVICE(JNAME)	W, C, HR	165
		F	Assumes terminal doesn't have feature		W, C, HR	166
		G	Terminal name on N parameter		W, C, HR	166
		O	DC3		W, C, HR	166
		PR	0		W, C, HR	166
		PRW	132		W, C, HR	167
RJPTERM	Opt	PU	0		W, C, HR	167
		PUW	80		W, C, HR	167
		RD	0		W, C, HR	167
		P			W, C, HR	167
		CS	Y		W, C, HR	167
		SET	N		W, C, HR	167
RJPWS	Opt	N			W, C, HR	171
		RD	1		W, C, HR	171
		PR	1		W, C, HR	171
		PU	0		W, C, HR	171
		C	R		W, C, HR	171
		G	Same name as on N parameter		W, C, HR	171
		COMPACT	NO	COMPACT(NAME)	W, C, HR	171
		P			W, C, HR	172
		PL	2		W, C, HR	172

Table 4. Initialization Statement Summary M thru Z (continued)

Initialization Statement	Req or Opt	Parameter	Parameter Defaults	Related Statement (Parameter)	Start Type to Modify	Page
RJPWS	Opt	AUTO	N		W, C, HR	172
		LU	LOGONs accepted from any LU		W, C, HR	172
		TRACE			W, C, HR	172
		SETUP	NO		W, C, HR	172
SELECT	Opt	NAME	JS3BATCH	MAINPROC(SELECT)	W, C, HR	175
		CHOICE	FFIT	CLASS(IORATE)	W, C, HR	175
		CLASS	All classes become eligible for scheduling	CLASS(NAME)	W, C, HR	176
		GROUP	All groups become eligible for scheduling	GROUP(NAME)	W, C, HR	176
		INCL	14		W, C, HR	176
		INCR	1		W, C, HR	177
		JOBMIX	Depends on # of initiators, see statement	CLASS(IORATE)	W, C, HR	177
		LSTOR	12000	CLASS (LSTRR)	W, C, HR	177
		MAGEL	14		W, C, HR	177
SELECT	Opt	MAGER	0		W, C, HR	177
		SAGEL	14		W, C, HR	178
		SAGER	0		W, C, HR	178
		SBAR	16		W, C, HR	178
		SDEPTH	255		W, C, HR	178
SETACC	Opt	VOL		MAINPROC(NAME); DEVICE(XTYPE)	W, C, HR	180
SETNAME	Opt	XTYPE		DEVICE(XTYPE)	W, C, HR	182
		NAMES		HWSNAME(TYPE); STANDARDS(SETUP); GROUP(EXRESC); GROUP(DEVPOOL)	W, C, HR	182
		POOLNAMS		GROUP(DEVPOOL); GROUP(EXRESC)	W, C, HR	182

Table 4. Initialization Statement Summary M thru Z (continued)

Initialization Statement	Req or Opt	Parameter	Parameter Defaults	Related Statement (Parameter)	Start Type to Modify	Page
SETPARAM	Opt	ADDRSORT	YES		W, C, HR	185
		ALLOCATE	AUTO		W, C, HR	185
		DAFETCH	97(S1)	CONSOLE(DEST)	W, C, HR	186
		DEFERCT	NO	CLASS(SDEPTH); SELECT(SDEPTH)	W, C, HR	186
		DSN	0		W, C, HR	186
		FETCH	YES		W, C, HR	186
		MDSLOG	97(S1)	CONSOLE(DEST); DEVICE(XUNIT)	W, C, HR	187
		PRJESMSG	NONE		W, C, HR	187
		REMOUNT	1		W, C, HR	188
SETPARAM	Opt	SMSSETUP			W, C	188
		TAFETCH	97,97(S1,S1)	CONSOLE(DEST)	W, C, HR	188
		ALWIO	10		W, C, HR	188
SETRES	Opt	VOL			W, C, HR	190
SPART	Opt	NAME		CLASS, FORMAT, MAINPROC, SYSOUT, TRACK(SPART)	W, C	191
		DEF	NO; YES for first partition		W, C	191
		INIT	NO		W, C	192
		SPLIM	(10,25)	BUFFER(SPLIM)	W, C	192
		OVRFL	YES		W, C	193
		GRPSZ	BUFFER(GRPSZ) value or 30	BUFFER(GRPSZ); SYSOUT(TRKGRPS)	W, C	193
STANDARDS	Opt	ALTJCL	ACCEPT		W, C, HR	197
		CARDS	2,W,50		W, C, HR	197
		CIBATCH	ANY		W, C, HR	197
		CICNT	2,1		W, C, HR	198
		CIDEMAND	ANY		W, C, HR	198
STANDARDS	Opt	PSTCNT	See parameter description for algorithm		W, C, HR	198
		DBGCLASS	A		W, C, HR	199
		FAILURE	RESTART	CLASS(FAILURE)	W, C, HR	199
		JESMSG	NOTSO		W, C, HR	200
		LINES	1,W,50		W, C, HR	200
		BYTES	1500,W,50		W, C, HR	205
		PAGES	500,W,50		W, C, HR	205

Table 4. Initialization Statement Summary M thru Z (continued)

Initialization Statement	Req or Opt	Parameter	Parameter Defaults	Related Statement (Parameter)	Start Type to Modify	Page
STANDARDS	Opt	MAXJOBST	0		W, C, HR	201
		MAXASST	0		W, C, HR	201
		MAXINDD	MAXJOBST		W, C, HR	201
		PRTY	0	CIPARM(PARM); CLASS(PRTY)	W, C, HR	202
		SETUP	JOB	HWSNAME(TYPE); SETNAME(NAMES); //*MAIN	W, C	202
		THWSSEP	IGNORE		W, C	203
		INTPMID	01	CIPARM(PARMID)	W, C, HR	204
		STCPMID	01	CIPARM(PARMID)	W, C, HR	204
		TSOPMID	01	CIPARM(PARMID)	W, C, HR	204
INTPROC	ST	//*MAIN	W, C, HR	204		
STANDARDS	Opt	STCPROC	ST	FSSDEF(PNAME)	W, C, HR	205
		TSOPROC	ST		W, C, HR	204
		SYSLINES	10.50		W, C, HR	203
SYSID	Opt	NAME		NJERMT(BDTID)	W, C, HR	207
		CLASS	108(S12)		W, C, HR	207
SYSOUT	Opt	CLASS		NJERMT(PRTDEF)	W, C, HR	209
		CARR			W, C, HR	210
		CHARS		OUTSERV(CARRIAGE)	W, C, HR	210
		CONTROL			W, C, HR	210
		COPIES			W, C, HR	210
		DEST	LOCAL	DEVICE(JNAME) (DGROUP) (HEADER)	W, C, HR	211
		FLASH			W, C, HR	211
		FORMS		OUTSERV(FORMS); DEVICE(FORMS)	W, C, HR	211
		HOLD			W, C, HR	211
SYSOUT	Opt	INT			W, C, HR	212
		MODIFY			W, C, HR	212
		OVFL			W, C, HR	212
		PRTY			W, C, HR	212
		SPART	default spool partition	SPART(NAME)	W, C, HR	212
		STACKER			W, C, HR	212
		TRAIN		OUTSERV(TRAIN); DEVICE(TRAIN)	W, C, HR	213
		THRESHLD	99999999	OUTSERV(THRESHLD)	W, C, HR	213
		TRKGRPS	1,2	BUFFER(GRPSZ); SPART(GRPSZ)	W, C, HR	213

Table 4. Initialization Statement Summary M thru Z (continued)

Initialization Statement	Req or Opt	Parameter	Parameter Defaults	Related Statement (Parameter)	Start Type to Modify	Page
SYSOUT	Opt	TRUNC	YES or TRUNC/BUFFER value	BUFFER(TRUNC)	W, C, HR	213
		TYPE	,,PRINT		W, C, HR	214
		COMPACT	Default compaction table used	COMPACT	W, C, HR	214
		CHNSIZE	DS		W, C, HR	214
TRACK	Req	DDNAME		BUFFER(BUFSIZE); BADTRACK(DDNAME)	W, C	216
		SPART		SPART(NAME)	W, C	216
		STT	Allocates center 2 tracks to STT		**Cold Only**	216
		STTL	Allocates center 2 tracks to STT		**Cold Only**	217

W - warm start
C - cold start
HR - hot start with refresh

Table 5. Summary of Initialization Statements/Parameters Summary - No Longer Supported

Initialization Statement	Parameter
BUFFER	FD
CONSOLE (BDT)	JNAME
	TYPE
CONSOLE (JES3)	JNAME
	TYPE
	DEST
	UNIT
	MAIN
	ALTCON
CONSOLE (JES3)	DEPTH
	LL
	TIME
	LEVEL
	PFK
CONSOLE (JES)	SP
	IOWAIT
	3290

Table 5. Summary of Initialization Statements/Parameters Summary - No Longer Supported (continued)

Initialization Statement	Parameter
CONSOLE (MCS)	JNAME
	TYPE
	UNIT
	LEVEL
CONSTD	FLAG
	CONSBUF
	HARDCOPY
	WTP
JES3LIB	DSN
	VOLSER
	UNIT
MAINPROC	CPUID
	STXTNT
	MODEL
RID	
SID	
NJECONS	SIZE=
PFK	N
	K
	E
	M

Correcting an Incorrect Parameter Value

If you restart JES3 using an initialization stream that has an incorrect value for any of the parameters listed in Table 6, JES3 uses the parameter's default (individual parameter descriptions in Chapter 2, "Initialization Statements" define valid parameter values.) By using the parameter's default, JES3 can continue to run. Thus, you have a running system that you can use to correct the initialization stream.

To warn you about an incorrect subparameter, JES3 issues message IAT3255. This message identifies the affected parameter, the incorrect subparameter, and the default value.

If you do not want JES3 to continue to run with the subparameter default, restart JES3 using the corrected initialization stream.

Table 6. Defaults Taken When Parameters Values Are Not Valid

Statement	Parameter	Default
BUFFER	BUFSIZE FD GRPSZ MINBUF PAGES SPLIM	4084 512 30 16 1024,128,512 10,25
CLASS	IORATE JESMSG JOURNAL SPART SPIN TRKGRPS	MED JESMSG setting on STANDARDS statement NO default spool partition NO 1,2
COMMDEFN	LU	255
COMPACT	DEFAULT	N
CONSOLE (RJP)	LEVEL SAVEMSG	0 YES
CONSTD	PLEXSYN	*
DEVICE (Define I/O device)	BURST CARRIAGE CB CHARS CKPNT CKPNTPG CKPNTSEC DYNAMIC FLASH FORMS FSSNAME HEADER MODE MODIFY NPRO PAGELIM PM STACKER TRAIN XLATE WC WS	YES YES,STANDARD N YES,STANDARD 200(punch),10000(3800),2000(3211),1000(others) 200 pages 200 pages FSS=NO, non-FSS=YES YES,STANDARD YES,STANDARD JNAME specification YES With the FSSNAME parameter: FSS Otherwise: COMP YES,STANDARD STANDARD 0+ With MODE=FSS: (LINE,PAGE) With MODE=COMP: LINE YES,STANDARD YES,STANDARD YES (NO for IBM 3211 and compatible devices) STANDARD STANDARD
FSSDEF	DSPCNT MAXASST MSGDEST START TERM	2,1 0 42(JES) YES NO
GROUP	BAR MODE	16 JES
MAINPROC	SPART TRKGRPS USRPAGE	default spool partition 1,2 4

Table 6. Defaults Taken When Parameters Values Are Not Valid (continued)

Statement	Parameter	Default
OPTIONS	DUMP DUPJOBNM INTRDR MT WANTDUMP XCFGRPNM	JES NO 20 OFF YES nodename on home node or 'N1' if no home node
OUTSERV	CB NPRO OUTLIM STACKER	N 90 16777215 C
RESCTLBK	FCT	0
RJPLINE	I (1-character line interface) I (mode of operation) S	A Y 2400
RJPTERM	O	DC3
RJPWS	C PL PR PU RD	R 2 1 0 1
SELECT	CHOICE MAGEL MAGER SAGEL SAGER SBAR SDEPTH	FFIT 14 0 14 0 16 255
SETPARAM	ADDRSORT ALLOCATE DSN FETCH REMOUNT SMSSETUP	YES AUTO 0 YES 1 YES
SPART	DEF GRPSZ INIT OVRFL SPLIM	NO 30 NO YES (10,25)
STANDARDS	ALTJCL BYTES CARDS CICNT JESMSG INTPMID INTPROC LINES MAXJOBST MAXASST PAGES PRTY SETUP	ACCEPT 1500,WARNING 2,WARNING (2,1) NOTSO 01 ST 1,WARNING 0 0 500,W,50 0 JOB

Table 6. Defaults Taken When Parameters Values Are Not Valid (continued)

Statement	Parameter	Default
SYSOUT	SPART TRKGRPS	default spool partition 1,2

Chapter 2. Initialization Statements

This chapter describes each of the JES3 initialization statements. Each JES3 initialization statement description consists of the following sections:

Statement Summary
This section consists of a table with the following standard parts.

- Required/Optional Statement

  Indicating whether this statement must be in the JES3 initialization stream or can be omitted.
- Statement Default

  An identification of any defaults that will be set if this statement is specified with ″no″ parameters.
- Placement in initialization stream

  This specifies whether this initialization statement must be position in the initialization stream in any particular way.
- Coding Considerations

  A description of any special ways the statement should be specified. Also, an indication (if any) those other initialization statements that this statement is dependent on.
- Security Usage

  Documents any information about authorization characteristics that relate to the initialization statement
- Performance Considerations

  A description of any special performance considerations that relate to the initialization statement.
- Initialization Statement Overrides

  A description of how or when the original settings of the initialization statement can be overwritten.
- Restart or Command Modification

  A description of the various ways the settings on the initialization statement can be modified.

Syntax and Parameters
A syntax diagram and description of parameters for specifying the initialization statement.

Examples
Various examples of specifying the initialization parameters.

General Syntax

How to Read a Syntax Diagram

Syntax is described using the structure defined below.

- Read the syntax diagrams from left to right, from top to bottom, following the path of the line.

  The ►►── symbol indicates the beginning of a message syntax.

  The ──► symbol indicates that the message syntax is continued on the next line.

© Copyright IBM Corp. 1988, 2002

The ►── symbol indicates that the message syntax is continued from the previous line.

The ──►◄ indicates the end of the message syntax.

A lower-case word indicates a variable.

- Strings of fixed text, keywords (and their value), and positional items that always appear in the message are shown on the horizontal line (the main path).

```
►►──positional_item──,required_item──,KEYWORD=──required_value──────────────►◄
```

- Strings of fixed text, keywords (and their value), and positional items that might not appear in the message are shown below the main path.

```
►►──┬──────────────┬──┬──────────────────────────┬──────────────────────────►◄
    └optional_item─┘  └,KEYWORD=──optional_item──┘
```

- If one of several items might appear in a message, they appear vertically, in a stack. If some item always appears in the message, an item is shown on the main path.

```
►►──┬─positional_choice1─┬──,KEYWORD=──┬─required_choice1─┬──────────────────►◄
    └─positional_choice2─┘             └─required_choice2─┘
```

- If there is a possibility that none of the items will appear in the message, the entire stack is shown below the main path.

```
►►──positional_item──┬──────────────────────┬──────────────────────────────►◄
                     ├─,optional_choice1────┤
                     └─,optional_choice2────┘
```

- If one of the items has a default, it appears above the main line (for that item) and the overriding choices will be shown on and/or below the main line. For POSITIONAL items the syntax is as follows:

```
►►──┬──────────────────────────┬──────────────────────────────────────────►◄
    │                     (1)  │
    │┌─positional_default──────┐│
    └┤                         ├┘
    │└─positional_option1──────┘│
    │                     (2)  │
    └─positional_option2────────┘
```

Notes:

1 If a positional parameter is not specified, the positional default is used

2 If a positional parameter is coded, then any one of the 3 positional parameters can be specified.

Note: This does not apply to messages.

For KEYWORD items the syntax is as follows:

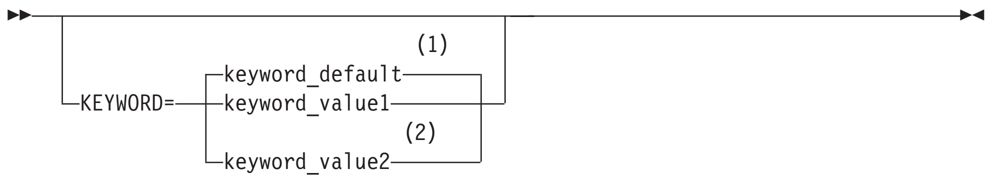

Notes:

1 If KEYWORD is not coded, the keyword_default is used.

2 If the KEYWORD is coded, then the keyword_default or the keyword value override MUST be coded.

Note: This does not apply to messages.

- An arrow returning to the left above the main line indicates an item that can be repeated indefinitiely.

- A repeat arrow with a syntax note indicates how many times this can be repeated.

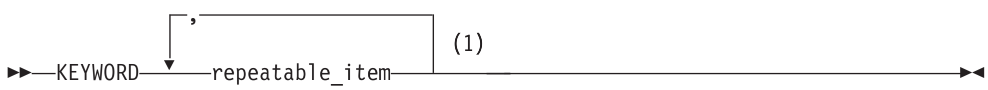

Notes:

1 (1) Specify the <repeatable_item> 1 to n times.

- Syntax is occasionally broken into fragments if the inclusion of the fragment would overly complicate the main syntax diagram.

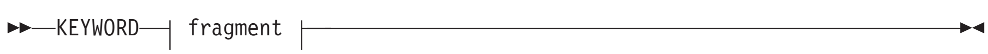

fragment:

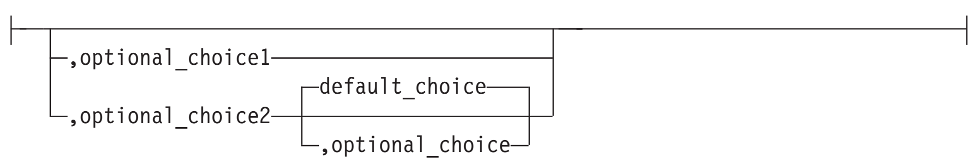

ACCOUNT (Job Accounting)

Use the ACCOUNT initialization statement to define default job accounting information. JES3 assigns this default if the operator omits the ACCT parameter on a JES3 *CALL command.

Statement Summary

Table 7. ACCOUNT Summary

Required/Optional Statement	Optional
Statement Default	(0,0,0,0)
Placement in Initialization Stream	This statement must follow the ENDJSAM statement.
Coding Considerations	The maximum length for accounting information is 42 characters including parentheses, commas, and apostrophes. All characters except blanks are valid. If the special character is an apostrophe, specify it as two consecutive apostrophes.
Security Usage	None
Performance Considerations	None
Initialization Stream Overrides	None. However, the ACCT parameter on JES3 *CALL commands overrides the accounting information that you specify on the ACCOUNT statement.
Restart or Command Modification	Cold start, warm start, or hot start with refresh for all parameters.

Syntax

```
►►──ACCOUNT──┬─┬─,─┬──acctno──┬─,─┬──────────────────────────────────┬──►◄
             │ │   │          │   │                                  │
             │ (───┬─────────┬──,──┬─┬─,─┬──acctinfo──┬─,─┬──────────)─┤
             │ │   └─acctno──┘     │ │   │            │   │            │
             │ │                   │ └───┴────────────┴───┘            │
             │ ,───┬─────────┬──,──┬──acctinfo──────────┬──────────,─┘
             │     └─acctno──┘     │                    └─,acctinfo──┘
             │                     └────────────────────────────────────┘
```

Parameters

acctno
Specifies an account number only. If this account number contains any special characters, enclose the entire account number in apostrophes.

acctno
Specifies that accounting information consists of either the account number, with one or more items of additional information, or only the additional accounting information. All parameters within the parentheses are considered separate fields. Enclose all special characters except hyphens in apostrophes. If acctno is not specified, a comma must follow the left parenthesis.

acctno,acctinfo
Specified if accounting information consists of either the account number, with one or more items of additional accounting information, or only the additional accounting information. All information within the apostrophes is to be considered one field.

Examples

Example 1: The following example specifies only the account number without special characters.

```
ACCOUNT,12A75
```

Example 2: The following example specifies only the account number with two special characters—a period (.) and an apostrophe (').

```
ACCOUNT,'12A.75'20'
```

Example 3: The following example specifies an account number and two items of additional accounting information. All three parameters are considered separate fields.

```
ACCOUNT,(12A75,DEPT-D58,706)
```

Example 4: The following example shows the same parameters as those specified above; however, all information between the apostrophes is considered to be one field.

```
ACCOUNT,'12A75,DEPT-D58,706'
```

Example 5: The following two examples show special characters in the account number parameter and in the first parameter of additional information.

```
ACCOUNT,('B.93','DEPT/99',BLDG002)    ACCOUNT,'B.93,DEPT/99,BLDG002'
```

Example 6: The following examples do not supply an account number however, the examples include other accounting information.

```
ACCOUNT,(,'H.J.WELLSCOMPANY',NYC,55-33,1,1,3)
ACCOUNT,',H.J.WELLSCOMPANY,NYC,55-33,1,1,3'
```

BADTRACK (Bypass Defective Tracks)

Use the BADTRACK statement to identify defective tracks on a spool volume. JES3 dynamically adds an entry to the BADTRACK table when a defective track is discovered and issues a message to the console operator that identifies the defective track. If possible, add a BADTRACK statement to your initialization stream at that time so that JES3 keeps a record of the defective track across a warm or cold start. If you cannot add a BADTRACK statement immediately, ensure that you add a BADTRACK statement before the next warm or cold start.

Statement Summary

Table 8. BADTRACK Summary

Required/Optional Statement	Optional
Statement Default	None. If the initialization stream contains neither BADTRACK nor FORMAT statements and defective tracks existed on a spool volume before the most recent warm or cold start, I/O errors will occur when JES3 attempts to use the track group containing those tracks.
Placement in Initialization Stream	This statement must appear before the ENDJSAM statement.

Table 8. BADTRACK Summary (continued)

Coding Considerations	1. Specify only one track on a statement. The maximum number of BADTRACK statements that you can specify is 32,767. 2. You cannot use a BADTRACK statement to identify defective tracks in the single track table (STT). 3. Do not substitute a FORMAT statement for a BADTRACK statement, although it also causes JES3 to identify defective tracks. 4. Dependent on the TRACK and FORMAT statements.
Security Usage	None
Performance Considerations	None
Initialization Stream Overrides	None
Restart or Command Modification	Cold start or warm start for all parameters. You can use the `*MODIFY,Q,DD=ddname,CYL=cyl,TRK=trk` command to add badtrack records.

Syntax

```
►►──BADTRACK──,DDNAME=ddname──,CYL=nnnn──,TRK=nnnn──────────────────────────►◄
```

Parameters

DDNAME=
Specifies the name of the DD statement or matches the ddname on the DYNALLOC statement that defines the spool volume with the defective track.

JES3JCT is not a valid ddname for this parameter.

CYL=
Specifies a 4-digit hexadecimal value that identifies the cylinder which contains the defective track.

TRK=
Specifies a 4-digit hexadecimal value that identifies the defective track.

Example

The following example assumes that tracks 1 and 13 are defective on cylinder 10 of SPOOL2. If you warm start or cold start JES3 and a FORMAT initialization statement is not in the initialization stream, BADTRACK statements must be in the stream to prevent JES3 from using these tracks. If you do not include these BADTRACK statements, tracks 1 and 13 are assigned for I/O activity and data on them may be lost.

```
BADTRACK,DDNAME=SPOOL2,CYL=000A,TRK=0001
BADTRACK,DDNAME=SPOOL2,CYL=000A,TRK=000D
```

BUFFER (JES3 Spool Work Buffers)

Use the BUFFER statement to define the size of the JES3 buffer pool and the length of JES3 buffers and spool data set records.

Statement Summary

Table 9. BUFFER Summary

Required/Optional Statement	Optional

Statement Default	`BUFFER,BUFSIZE=4084,PAGES=(1024,128,512),`
	`GRPSZ=30,MINBUF=16,SPLIM=(10,25),`
	`TRUNC=YES`

Placement in Initialization Stream	This statement must appear before the ENDJSAM statement.
Coding Considerations	If you change the BUFSIZE parameter and do not reformat the spool data sets before the next cold start, include FORMAT statements in the initialization stream during the next cold start.
Performance Considerations	1. In selecting the size of the buffer pool, make sure the size is large enough for all functions to be active at the same time. Also, it is recommended that you make the buffer pool larger than the value you calculate. The larger buffer pool will better accommodate bursts of I/O activity. 2. If virtual storage in the JES3 global address space is not constrained, the recommended buffer size is 4084. Buffers do not span page boundaries; therefore, specifying 2036 or less provides two buffers per page. Specifying a larger value provides one buffer per page. These recommended values optimize virtual storage usage but do not optimize spool usage.
Security Usage	None
Initialization Stream Overrides	The GRPSZ and SPLIM parameters on the SPART statement override the GRPSZ and SPLIM parameter on this statement. The TRUNC parameter on the SYSOUT statement overrides the TRUNC parameter on this statement for the specified SYSOUT class.
Restart or Command Modification	• Cold start to change the size of a buffer (BUFSIZE) • Warm start to replace a spool data set (WR) to modify the GRPSZ parameter. • Hot start with refresh to modify the FD, MINBUF, and TRUNC parameters. All other parameters are syntax checked only; the value from the last warm or cold start will be used.

Syntax

```
►►──BUFFER──┬──────────────────────────────────────────────────────────►
            │                   ┌─4084─┐
            └─,BUFSIZE=──────┬──┴─nnnn─┴──┘

►──┬──────────────────────────────────────────────────────────────────┬──────────────────────────────────────────────────────────────────┬──►
   │                   ┌─(1024,128,512)─┐                            │  │                   ┌─30─┐                                       │
   └─,PAGES=──────┬────┴────────────────┴──────────────────────────┘  └─,GRPSZ=──────┬──┴─nnn─┴──┘
                  └─(──global──,local──,cifss──)──┘
```

```
►──┬──────────────────┬──┬──────────────────────────────────────────────────►
   │          ┌─16─┐  │  │                ┌─10──,──25──┐                     │
   └─,MINBUF=─┴─nn──┘  │  └─,SPLIM=──(────┴─min──,──marg─┴──)──┘
►──┬──────────────────┬──────────────────────────────────────────────────────►◄
   │          ┌─YES─┐  │
   └─,TRUNC=──┴─NO──┘  │
```

Parameters

BUFSIZE=

Specifies the length, in bytes, of the data portion of each JES3 buffer and of each record in the spool data sets. The value must be a multiple of four in the range from 1952 to 4084. If virtual storage in the JES3 global address space is not constrained, the recommended value is 4084. Otherwise, the recommended value is 2036. Buffers do not span page boundaries; therefore, specifying 2036 or less provides two buffers per page. Specifying a larger value provides one buffer per page. These recommended values optimize virtual storage usage but do not optimize spool usage. For further guidelines in helping you define the BUFFER parameter, see *z/OS JES3 Initialization and Tuning Guide*.

The number of buffers is computed at initialization and is based on the number of pages and buffer size specified on the PAGES and BUFSIZE parameters of this statement.

If you change the BUFSIZE parameter, you must cold start JES3 and reformat all of the spool data sets. For a discussion about how to format the spool data sets, see "Formatting Spool Data Sets" in *z/OS JES3 Initialization and Tuning Guide* .

Note: The maximum record size that can be written to SYSOUT in LINE mode is 60 bytes less than the defined buffer size. JES3 used approximately 60 bytes for spool control information.

If you specify an invalid subparameter, JES3 uses the parameter default.

PAGES=

Specifies the size of the primary allocation of JES3 buffers in the JES3 global address space, all JES3 local address spaces, and all C/I functional subsystem (FSS) address spaces, respectively. The maximum number of pages that you can define is 16,383 or 32,767, depending on the buffer size that you specify on the BUFSIZE parameter.

The total number of pages that you can specify must be between 16 and 32,767 inclusive, depending on the number of buffers per page.

- If you specify a buffer size greater than 2036 bytes, the maximum number of pages that you can specify is 32,767.
- If you specify a buffer size of 2036 or less, the maximum number of pages that you can specify is 16,383.

You specify the size of buffers on the BUFSIZE parameter. For guidelines to help you select a value for this parameter, see "Determining the Size of the JES3 Buffer Pool" in *z/OS JES3 Initialization and Tuning Guide*.

JES3 automatically expands the size of the JSAM buffer pool when it detects a buffer shortage. For each expansion, JES3 increases the size of the buffer pool by one half of the value you specify on this parameter up to a maximum of

four times or 32,767, whichever occurs first. For additional information about determining the size of the JSAM buffer pool, see *z/OS JES3 Initialization and Tuning Guide*.

If you specify an invalid subparameter, JES3 uses the parameter default.

GRPSZ=
Specifies the number of spool records in each track group. (The BUFSIZE parameter determines the size of each spool record.) The number must not be greater than 999. JES3 rounds the specified value up to the nearest number of records in a whole physical track for the selected spool device type. For guidelines to help you select a value for this parameter, see "Determining the Size of a Track Group" in *z/OS JES3 Initialization and Tuning Guide*.

If you change the group size parameter, you must perform a warm start to replace a spool data set (WR) and reformat all of the spool data sets. For a discussion about how to format the spool data sets, see "Formatting Spool Data Sets" in *z/OS JES3 Initialization and Tuning Guide*.

If you specify an invalid subparameter, JES3 uses the parameter default.

MINBUF=
Specifies the value that JES3 uses to calculate the acceptable minimum number of free JSAM buffers. The value you specify can be any decimal integer between 8 and 64, inclusive.

To calculate the acceptable minimum number of free JSAM buffers, JES3 divides the specified value into the total number of JSAM buffers. The total number of buffers includes the primary allocation of buffers as defined on the PAGES parameter plus all secondary buffer allocations. The quotient defines the acceptable minimum number. JES3 ignores the remainder. All secondary allocations of buffers must be exhausted before a minimal buffer condition exists.

When the number of free JSAM buffers is equal to or less than the acceptable minimum number, JES3 issues an action message. If the operator does not take corrective action, stop some converter interpreters, for example, JES3 may go into the wait state.

If JES3 encounters a minimum buffer condition frequently, increase the number of JSAM buffers during the next warm start or cold start. To increase the number of buffers, increase the value of the PAGES parameter on the BUFFER statement.

If the minimum buffer condition occurs for a C/I FSS address space, JES3 issues a warning message.

If you specify an invalid subparameter, JES3 uses the parameter default.

SPLIM=
Specifies the minimum and marginal percentages of spool space still available in active spool partitions. An active spool partition is one containing at least one spool data set. If the minimal or marginal percentages of spool space are reached, indicating that a spool partition is nearly full, JES3 issues action messages to the operator.

min
Specifies the percentage of total spool space in an active spool partition which, when that percentage is all that is still available, defines a minimum spool space condition. For example, if you specify a value of 10,

a minimum spool space condition exists when 10% or less of the spool space in an active spool partition is still available.

The percentage of spool space defining this condition may be between 0 and 99. It must, however, be smaller than or equal to the percentage defining a marginal spool space condition (see the marg subparameter).

When a spool partition reaches a minimum spool space condition, JES3 issues a message stating that this condition has occurred. The message alerts the operator to inquire whether the spool partition automatically overflows into another partition. If the spool partition does overflow, no operator action is required. Otherwise, the operator can use JES3 commands to take appropriate actions. For information on actions to take, see "Balancing the Workload Across Partitions" in *z/OS JES3 Initialization and Tuning Guide*.

If a minimum spool space condition arises on the default spool partition, JES3 suspends all SYSOUT buffer processing. JES3 does not resume SYSOUT buffer processing until enough spool space is freed to reach a marginal spool space condition.

Always specify a minimum spool space percentage for the default spool partition so that enough spool space remains to perform a warm start. Otherwise, if JES3 requires a warm start and not enough spool space is available, you must perform a cold start.

marg
Specifies the percentage of total spool space in an active spool partition which, when that percentage is all that is still available, defines a marginal spool space condition. For example, if you specify a value of 20, a marginal spool space condition exists when 20% or less of the spool space in an active spool partition is still available. The percentage of spool space defining this condition may be between 0 and 99.

When a spool partition reaches a marginal spool space condition, JES3 issues a message stating that this condition has occurred. The message alerts the operator to inquire whether the spool partition automatically overflows into another partition. If the spool partition does overflow, the operator need not take any action. Otherwise, the operator can use JES3 commands to take appropriate actions. For information on actions to take, see "Balancing the Workload Across Partitions" in *z/OS JES3 Initialization and Tuning Guide*. When a marginal spool space condition arises, job selection is suspended.

If you specify an integer greater than the maximum allowable, JES3 uses the parameter default. If you specify a negative integer or a non-numeric character, JES3 issues a message and terminates initialization.

If you specify an invalid subparameter, JES3 uses the parameter default.

TRUNC=
Specifies whether or not you want JES3 to truncate trailing blanks from all SYSOUT data that is produced in the complex.

YES
Indicates that you want JES3 to truncate trailing blanks from all SYSOUT.

NO
Indicates that you do not want JES3 to truncate trailing blanks from all SYSOUT.

Example

In the following example, the BUFFER statement specifies that:

- A minimal spool space condition exists when only 3% of the total spool space in an active spool partition is still available
- A marginal spool space condition exists when only 5% of the total spool space in an active spool partition is still available
- The JES3 buffer pool size for the JES3 global processor is 52 pages
- The size of a track group is 12 spool records
- The size of a JES3 buffer and of a spool record is 1952 bytes

```
BUFFER,SPLIM=(3,5),PAGES=52,GRPSZ=12,BUFSIZE=1952
```

CIPARM (Converter/Interpreter Parameters)

Use the CIPARM statement to specify the options to be used by the MVS converter/interpreter (C/I). These options are used as system defaults applied to certain JCL statement parameters and other options for jobs scheduled on any main.

Statement Summary

Table 10. CIPARM Summary

Required/Optional Statement	Optional
Statement Default	`CIPARM,PARM=(00000300025631E00011A),PARMID=01 ,AUTH=ALL,COMMAND=IGNORE`
Placement in Initialization Stream	This statement must follow the ENDJSAM statement.
Coding Considerations	• Specify the PARMID parameter to distinguish option lists if you include more than one CIPARM statement in the initialization stream.
Security Usage	Use the PARM parameter to define a 21-character parameter string that the MVS Converter/Interpreter uses when processing jobs. The fourteenth character specifies whether or not to ignore the bypass label processing (BLP) JCL option.
Performance Considerations	None
Initialization Stream Overrides	The PRTY parameter on the STANDARDS statement overrides any value specified in columns two and three of the option list.
Restart or Command Modification	• Cold, warm, or hot start with refresh for all parameters. • If you add, change, or delete a CIPARM statement during a hot start with refresh, you should restart any C/I FSS's that are active to make sure that the changes are incorporated.

Syntax

```
►►──CIPARM──┬──────────────────────────────────────────────────────────┬──┬──────────────────────┬──►
            │                   ┌─00000300025631E00011A─┐              │  │                      │
            └─,PARM=──(──┬──────┴─optionlist────────────┴──)──┘          └─,PARMID=──┬─01─┬──┘
                         │                                                           └─id─┘
```

```
►──┬──────────────────┬──┬──────────────────────────────────────────────────────────────────►
   └─,REGION=nnnnx────┘  │                  ┌─ALL──────────────────────────────────────────┐
                         └─,AUTH=──┬─INFO─────────────────────────────────────────────────┤
                                   └─(──┬─────────┬──┬─────────┬──┬─────────┬──)──────────┘
                                        └─SYS─────┘  └─,IO─────┘  └─,CONS────┘

►──┬──────────────────────────────────────────────────────────────────────────────────────►◄
   │                  ┌─IGNORE──┐
   └─,COMMAND=────────┼─DISPLAY─┼──┘
                      ├─EXECUTE─┤
                      └─VERIFY──┘
```

Parameters

AUTH=
Specifies which commands will be accepted through COMMAND JCL statements in the job stream. The groups includes:

SYS
system commands

IO input/output commands

CONS
console commands

INFO
information commands (such as display)

ALL
all operator command types

For an explanation of operator command groups and the relationship of JES3 to MVS command groups, refer to *z/OS JES3 Commands* and *z/OS MVS System Commands*, respectively.

COMMAND=
Specifies the disposition of commands entered through COMMAND JCL statements in the job stream as follows.

DISPLAY
The command is displayed and scheduled for execution.

EXECUTE
The command is scheduled for execution.

IGNORE
The command is ignored (that is, interpreted as a “no operation”.). IGNORE is the default.

VERIFY
Specifies that the system displays the command, asks the operator whether the command should be executed, and if the operator replies “YES”, schedules the command for execution.

PARM=
Specifies an option list of 21 EBCDIC characters. The option list has 10 fields that you must code in the format shown. Two fields have a fixed value always set by JES3: positions 13 and 15-18. Six fields are set at initialization: positions 2-3, 4-9, 10-12, 19, 20, and 21. JES3 restricts one field (position 1) to certain

values. If you specify any value incorrectly, the default value *for that field* is used. You can substitute values only for the underscored items in the following format: bppmmmmssccc rlaaaaefh

b Specifies whether an account number and/or programmer name is required for this job, and whether the scheduler work area is to be located above 16-megabytes when the job executes. The following table lists the combination of options.

b	SWA Above 16 Mg	Acct. Num. Required	Prog. Name Required
0	No	No	No
1	No	No	Yes
2	No	Yes	No
3	No	Yes	Yes
4	Yes	No	No
5	Yes	No	Yes
6	Yes	Yes	No
7	Yes	Yes	Yes

No values other than 0 to 7 are valid. Default value is 0.

pp Specifies the default job priority. This field is ignored by JES3 because the default priority comes from the job specified by the PRTY parameter on the STANDARDS statement. The range of values is from 00 to 14; the default value is 00.

mmmmss
Specifies the maximum length of time each job step may execute. When a step exceeds this limit, the step is canceled. JES3 assigns the time limit defined in the initialization stream when a job's JOB or EXEC JCL statement does not specify a time limit.

The first 4 characters indicate minutes; the last 2 characters indicate seconds. The maximum time limit that can be specified on the CIPARM statement is 999959 (approximately 1 week); the default time limit is 30 minutes (003000). If you want to allow job steps to run for an unlimited duration, specify 144000.

Users can specify a time limit greater or less than the initialization stream default by explicitly coding a time limit on a job's JOB or EXEC JCL statement. The maximum time limit that can be specified in a job's JCL is 357912 minutes, 59 seconds (approximately 249 days).

ccc
Specifies the job-step region default. Specify 3 numeric characters as the number of 1024-byte blocks assigned to each job step. (Do not specify 000.) JES3 assigns this region size to a step when the JOB or EXEC statement does not specify the region size and does specify ADDRSPC=VIRT for the step. The default value is 256.

Notes:

1. You must specify this value and/or the REGION parameter if you are defining a C/I FSS. The default does not provide adequate region size.
2. This is ignored if the REGION parameter is specified.

l Specifies how the BLP parameter of the DD statements is to be processed:

- **0** Specifies that the BLP parameter is to be ignored; the LABEL parameter is processed as if NL was specified.
- **1** Specifies that the BLP parameter is to be processed as intended. The default is 1.

e Specifies the job MSGLEVEL default.

- **0** indicates that only the JOB statement is to be written as output.
- **1** indicates that all input JCL statements (including in-stream procedures) are to be recorded in the system message data set. The default is 1.
- **2** indicates that only input JCL statements are to be written.

f Specifies the allocation MSGLEVEL default.

- **0** indicates that no allocation/termination messages are recorded in the system message data set unless the job terminates abnormally.
- **1** indicates that all allocation/termination messages are recorded in the system message data set. The default is 1.

h Specifies the MSGCLASS default. The default class is A.

The option list must be 21 characters long in the fixed format described above. The installation may specify only those values defined by b, mmmmss, ccc, l, e, f, and h. JES3 values are assumed for the other fields.

PARMID=
Specifies a 2-byte identifier associated with this option list. This parameter provides the facility to have a variety of C/I option lists. The operator may select the option list to be used by specifying the identifier on the *CALL, CR, DR, or TR command.

REGION=
Specifies the job-step region default size.

nnnn
Specifies the 1- to 4-digit number of units used for the default region size for a job step. This value overrides the region size in the PARM option list, and is otherwise processed the same way. If you do not specify this parameter, JES3 obtains the region size from the PARM option list.

x Indicates the unit of measure as kilobytes (K) or megabytes (M)

- For nnnnK, the maximum allowable value is 9999K
- For nnnnM, the maximum allowable value is 2047K

Example

In the following example, a C/I parameter list identified as 10, specifies a default region size as 60K, a default label processing option which ignores the bypass label processing parameter, and a default message class of B.

```
CIPARM,PARM=(00000003006030E00011B),PARMID=10
```

CLASS (JES3 Job Class Definition)

Use the CLASS initialization statement to define the characteristics of JES3 job classes. A CLASS statement must define each class that can appear on the //*MAIN control statement.

Statement Summary

Table 11. CLASS Summary

Required/Optional Statement	Optional
Statement Default	None
Placement in Initialization Stream	This statement must follow the ENDJSAM statement.
Coding Considerations	1. You can define up to 255 classes. 2. This statement has dependencies on the SPART initialization statement. During a hot start with refresh, JES3 does not process the SPART statement but uses the SPART statement from the last warm or cold start. If you add a SPART statement during a hot start with refresh, JES3 ignores it and issues error messages if the CLASS statement you use references the SPART statement that you attempted to add during a hot start with refresh. 3. The IORATE= and LSTRR= keyword parameters are ignored for job classes that are associated with WLM-managed job class groups. 4. For started tasks, all CLASS initialization parameters are ignored except the following: • CI scheduling (CIDEMAND parameter on the CLASS initialization statement) • Job class group name (GROUP parameter on the CLASS initialization statement) • Device fencing (EXRESC and DEVPOOL patameters on the GROUP initialization statement associated with this CLASS initialization statement) • Spoolpartitioning (SPART parameter on the CLASS initialization statement) • Track group allocation (TRKGRPS parameter on the CLASS initialization statement)
Security Usage	None
Performance Considerations	None
Initialization Stream Overrides	1. The specification of the TRKGRPS parameter on the SYSOUT statement and //*MAIN statement overrides the specification on the CLASS statement. If you do not specify the TRKGRPS parameter on the CLASS statement or any of the statements that override the CLASS statement, JES3 uses the specification given (or defaulted to) on the MAINPROC statement. 2. For individual jobs, the //*MAIN JES3 control statement and the EXEC JCL statement can override certain parameters on the CLASS statement. See individual parameter descriptions.

Table 11. CLASS Summary (continued)

Restart or Command Modification	• Cold start, warm start, or hot start with refresh for all parameters. If you delete a CLASS initialization statement during a hot start with refresh and there are jobs referencing that job class, the job's will be placed in hold status. JES3 failures can occur if any of these jobs are in execution. • Use the `*MODIFY,G,main,CLASS` command to activate or deactivate a class. • Use the `*MODIFY,C=class,SP=spart` command to modify the spool partition. • Use the `*MODIFY,C=class,SDEPTH=` command to modify the setup depth (SDEPTH). • Use the `*MODIFY,C=class,TDEPTH=` command to modify the TDEPTH parameter. • Use the `*MODIFY,C=class,MDEPTH=` command to modify the MDEPTH parameter. • Use the `*MODIFY,C=class,TLIMIT=` command to modify the TLIMIT parameter. • Use the `*MODIFY,C=class,GROUP=` command to modify the group assigned to a class. • Use the `*MODIFY,C=class,JESMSG=` command to modify whether to create or suppress the JESMSGLG data set for jobs that run in this class. • Use the `*MODIFY,C=class,SPIN=` command to modify whether to spin off or not spin off the JESlog (JESMSGLG and JESYSMSG) data sets for jobs running in this class and whether the spin off is automatic or at a particular time.

Syntax

```
►►─CLASS──,NAME=classname──┬──────────────────────────┬──────────────────────►
                           └─,CIBATCH=──┬─CLASS─┬─┘
                                        ├─JOB───┤
                                        └─ANY───┘

►──┬──────────────────────┬──┬──────────┬──┬──────────────────────────┬──────►
   └─,CIDEMAND=──┬─CLASS─┬─┘  └─,DEF=YES─┘  └─,FAILURE=──┬─CANCEL──┬─┘
                 ├─JOB───┤                               ├─HOLD────┤
                 └─ANY───┘                               ├─PRINT───┤
                                                         └─RESTART─┘

►──┬──────────────────────┬──┬──────────────────────────┬──────────────────►
   │              ┌─JS3BATCH─┐│  │              (1)    ┌─MED──┐│
   └─,GROUP=──────┴─groupname─┘│  └─,IORATE=──────────┼─HIGH─┼┘
                               │                      └─LOW──┘
                               │

►──┬──────────────────────┬──┬──────────────────────────┬──────────────────►
   └─,JESMSG=──┬─LOG───┬─┘  │              ┌─NO───┐│  │              (1)    ┌─0──┐│
               └─NOLOG─┘    └─,JOURNAL=──┬─YES──┘│  └─,LSTRR=──────────┼─nn─┘│
                                         └──────┘
```

```
►─┬──────────────────────────────────────────────────────────┬──►
  └─,MDEPTH=──(──procname──,depth──┬────────────────────┬──)─┘
                                   └─,procname──,depth──┘

►─┬──────────────────────────────────┬─┬──────────┬─┬────────────┬──►
  └─,MLIMIT=──┤ Class and Limit ├────┘ └─,PRTY=nn─┘ └─SDEPTH=nnn─┘

►─┬──────────────────────┬─┬─────────────────────────────┬──►
  └─,SPART=partitionname─┘ └─,SPIN=──┬─NO───────────┬────┘
                                     ├─YES──────────┤
                                     ├─+hh:mm───────┤
                                     ├─hh:mm────────┤
                                     └─nnn/nnnK/nnnM┘

►─┬───────────────────────────────────────────────────┬──►
  └─,SYSTEM=──┬─ANY──────────────────────────────────┤
              ├─LOCAL────────────────────────────────┤
              ├─JES3─────────────────────────────────┤
              ├─GLOBAL───────────────────────────────┤
              ├─procname─────────────────────────────┤
              └─┬───┬──procname──┬─────────────┬─────┘
                └─/─┘            └─,procname───┘

►──,TDEPTH=nnn──┬──────────────────────────────────┬──►
                └─,TLIMIT=──┤ Class and Limit ├────┘

►─┬────────────────────────────────────────────────────────┬──►◄
  └─,TRKGRPS=──(──┬─1───────┬──┬─,2───────┬──)─────────────┘
                  └─prigrps─┘  └─,secgrps─┘
```

Class and Limit:

```
├──(──classname──,──limit──┬──────────────────────────┬──)──────────┤
                           └─,classname──,──limit─────┘
```

Notes:

1 The parameter is ignored for job classes that are associated with WLM-managed job class groups.

Parameters

NAME=
Specifies the 1- to 8-character name of the job class. This name corresponds to the CLASS parameter on the //*MAIN control statement. If you omit DEF=YES from all CLASS statements in the initialization stream, JES3 defines JS3BATCH as the default class.

CIBATCH=
indicates whether or not batch jobs of this class must have CI processing

limited to certain processors. If specified for a class, this will override the value specified on the CIBATCH parameter on the STANDARDS statement. If not specified, JES3 will use the value specified on or defaulted to on the STANDARDS statement.

- JOB - indicates CI processing must be performed on a system on which the job is eligible to run.

  Note: Only the JES3 //*MAIN SYSTEM= JECL statement (NOT the job's scheduling environment) is considered for CI scheduling purposes when determining where the job is eligible to run.
- CLASS - indicates CI processing must be performed on a system on which the job's JOB CLASS is enabled.
- ANY - indicates CI processing may be performed on any processor regardless of job or class eligibility.

CIDEMAND=
indicates whether or not demand select jobs of this class must have CI processing limited to certain processors. If specified for a class, this will override the value specified on the CIDEMAND parameter on the STANDARDS statement. If not specified, JES3 will use the value specified on or defaulted to on the STANDARDS statement.

- JOB - indicates CI processing must be performed on a system on which the job is eligible to run.
- CLASS - indicates CI processing must be performed on a system on which the job's JOB CLASS is enabled.
- ANY - indicates CI processing may be performed on any processor regardless of job or class eligibility.

DEF=
Identifies this class as the default job class. Specify DEF=YES on one CLASS statement only. If you specify DEF=YES on multiple statements, the last such statement in the initialization stream defines the default class. If you omit the CLASS parameter from a batch job's or started task's //*MAIN statement and you do not specify a job class on the //JOB statement, JES3 assigns the default job class to that job.

Note: A job class that is not defined to JES3 cannot be specified on the //*MAIN statement. If it is specified, JES3 cancels the job.

FAILURE=
Specifies the job recovery option that JES3 is to use when a system failure affects jobs in this class.

For information on what JES3 considers a "failure" from a job's point of view, and for detailed information on how JES3 treats a job in these failure situations, refer to the FAILURE= parameter on the STANDARDS statement.

Note: If a job has been registered as an element of automatic restart management, the FAILURE= keyword is ignored.

If automatic restart management decides to start the job, all non-spin sysout datasets created during the previous execution will be deleted.

CANCEL
Print any job output that is in a SYSOUT class that is specified as TYPE=PRINT. After printing the output, cancel the job.

Empty data sets destined for the INTRDR are automatically cancelled.

HOLD
Place the job into the hold queue.

PRINT
Print any job output that is in a SYSOUT class that is specified as TYPE=PRINT. Then place the job into the hold queue.

RESTART
Restart the job from the first step. The job will be restarted on the processor on which it was active.

GROUP=
Specifies the name of a job class group to which this job class is to be assigned. This parameter must match the NAME parameter on a GROUP statement. If the GROUP parameter is omitted, JES3 assigns this class to the default group (JS3BATCH).

IORATE=
Specifies the default I/O rate for the jobs in this class. JES3 attempts to balance the mixture of jobs in execution based on the values that you have specified for the JOBMIX and CHOICE parameters on the appropriate SELECT statements. This parameter can be overridden for individual jobs by the IORATE parameter on the //*MAIN statement. For more information about how the IORATE parameter relates to job selection, see the description of the SELECT statement and in "Job Selection and Scheduling" in *z/OS JES3 Initialization and Tuning Guide*.

If you specify an invalid subparameter, JES3 uses the parameter default.

This parameter is ignored for job classes that are associated with WLM-managed groups. See "GROUP (Job-Class Group Definition)" on page 111 for more information on defining a WLM-managed group.

JESMSG=
Specifies whether to allow (LOG) or suppress (NOLOG) writing WTOs and WTORs to the JESMSGLG data set for jobs in this job class.

Note: If this JESMSG= is not used, the JESMSG= keyword on the STANDARDS initialization statement is in effect. If JESMSG= is used, its use overrides the specification of the JESMSG= keyword on the STANDARDS initialization statement.

JOURNAL=
Specifies whether (YES) or not (NO) job-related information is to be saved in a job journal.

YES
Indicates that jobs in this class are to have a journal data set.

NO
Indicates that there is to be no journal data set. If a system failure occurs affecting a job in this class, JES3 takes the action specified in the FAILURE option on this statement.

This parameter may be overridden by individual jobs with the JOURNAL parameter on the //*MAIN JES3 control statement.

If you specify an invalid subparameter, JES3 uses the parameter

Note: To restart a job automatically through checkpoint/restart or step restart, information about the job must be recorded in the job journal. To restart a job using automatic restart management, the job journal is not needed (automatic restart managementdoes not use the job journal).

MDEPTH=
Determines the maximum number of jobs in this class that can be run on the indicated main at any one time. You may repeat the procname and depth subparameters in pairs as is necessary.

procname
Specifies the name of a processor. The main name must match the NAME parameter on a MAINPROC statement.

depth
Specifies a decimal number from 0 to 255. This parameter indicates the maximum number of jobs of this class that JES3 can schedule to run concurrently on the named main.

LSTRR
Specifies the logical storage reduction rate (0 to 99), if ajob's logical region size is not specified in the LREGION parameter on the //*MAIN control statement. JES3 uses this parameter as a percentage of the region size to determine the job's logical region. If the LSTRR parameter is specified as 0, logical storage processing is effectively disabled for jobs not specifying LREGION.

If specified, the LREGION parameter overrides logical storage processing. If LSTOR=0 is specified on the SELECT statement logical storage scheduling is disabled.

For more information about defining logical storage, see "Defining Logical Storage for MVS Processors" in *z/OS JES3 Initialization and Tuning Guide*.

LSTRR is ignored for job classes that are associated with WLM managed groups. See "GROUP (Job-Class Group Definition)" on page 111 for more information on defining a WLM-managed group.

MLIMIT=
Determines the maximum number of jobs of other job classes that can run on the indicated main and still let JES3 schedule jobs in this class. When any of the limits are exceeded, JES3 does not schedule any more jobs in the class defined by this CLASS statement on that main. JES3 only schedules jobs of this class when the number of jobs running from the other named classes is equal to or less than the assigned limit.

This parameter may be repeated to describe job class limitations on each main. The classname and limit parameters should be repeated, in pairs, to indicate the job limits of each class by main.

procname
Specifies the name of a processor as specified in the NAME parameter of a MAINPROC statement.

classname
Specifies the name of another job class. This must match the NAME parameter on another CLASS statement.

limit
Specifies a number from 0 to 255. This value indicates the number of jobs of the class.

PRTY=
Specifies the JES3 job priority (0 to 14) be assigned to each job in this class. The PRTY parameter may be overridden on a job basis by the PRTY parameter on the JOB statement. If you omit this parameter, the value is taken from the PRTY parameter on the STANDARDS statement.

SDEPTH=
Specifies the maximum number of jobs in this class requiring MDS operator mounts that can be set up at one time. The value of nnn is a number from 0 to 255.

When JES3 counts the number of jobs that are set up, JES3 considers a job to be set up from the time the job enters allocation until the time the job's devices are deallocated.

Note: When deferred mounting is either specified in the JCL for any device (for example, UNIT=(TAPE,,DEFER)) or implicitly requested by using tape library dataserver devices, JES3 bypasses pre-execution mount processing and does not include the job in its CLASS setup depth (SDEPTH) count unless DEFERCT=YES has been specified on the SETPARAM initialization statement or the *F S operator command.

SPART=
Specifies the spool partition that JES3 is to use for jobs in this job class. The partition name must match the partition name specified on one of the SPART statements. To accept the default spool partition, omit this parameter.

A partition name specified on a //*MAIN JES3 control statement or on a SYSOUT initialization statement can override this parameter. For a discussion of the order of overrides, see "Determining the Order of Spool Partition Overrides" and "How the User Can Request a Spool Partition" in *z/OS JES3 Initialization and Tuning Guide*.

If you specify a partition name that has not been defined on an SPART statement, JES3 uses the default partition.

If you specify an invalid subparameter, JES3 uses the parameter default.

SPIN=
Specifies whether the installation wants to allow or suppress spin off of JESlog data sets during job exectuion.

YES
Specifies that a job running in this class, unless otherwise specified on the JOB statement or the START command, can have its JESlog data sets spun off through the use of a JES3 command.

+hh:mm
Specifies that a job running in this class, unless otherwise specified on the JOB statement or the START command, will have its JESlog data sets spun off automatically each time the *hh:mm* time interval has elapsed.

Note: The JESlog can be spun off at any time by using a JES3 command. This *hh:mm* value must be between 00:10 and 99:59 and the seconds must be between 00 and 59. Hours and minutes must be two digits.

hh:mm
Specifies that a job running in this class, unless otherwise specified on the JOB statement or the START command, will have its JESlog data sets spun off automatically at the time of day specified by *hh.mm*.

Note: The log can be spun off at any time by using a JES3 command. The *hh:mm* value must be between 00:00 (midnight) and 23:59 and the seconds must be between 00 and 59. Hours and minutes must be two digits.

nnn/nnnK/nnnM
Specifies that a job running in this class, unless otherwise specified on the JOB statement or the START command, will have its JESlog data sets spun off automatically each time the number of lines specified as *nnn* or *nnnK* or *nnnM* has been generated. If the interval is specified as *nnnK*, JESlog is spun off every *nnn* thousand lines; if the interval is specified as *nnnM*, the log is spun off every *nnn* million lines.

Note: The JESlog data sets can be spun off at any time using a JES3 command. This value must be at least *nnn* lines. *nnn* must have a value of 500 to 999 when *K* and *M* are not used. *nnn* must have a value of 1 to 999 when *K* or *M* is used.

NO
Specifies that the JESlog data sets for a job running in this class, unless otherwise specified on the JOB statement or the START command, cannot be spun off. This is the default.

If the same CLASS initialization statement is defined with JESMSG=NOLOG and SPIN= is specified with a value other than NO, then JES3 issues a warning message and assumes SPIN=NO. Also, consider the following scenario:

- The CLASS initialization statement specifies SPIN=YES (or some similar form is specified).
- JESMSG= is omitted on the CLASS initialization statement.
- JESMSG=NOSTC is specified on the STANDARDS initialization statement.
- The job in execution is a started task.

Writing to the JESMSGLG data set is suppressed. However, when the SPIN= interval for the JESYSMSG data set is reached or if an operator command is issued to spin the JESlog datasets, the JESlog data sets are spun off.

Notes:

1. The automatic spinning off of the JESlog data sets does not occur until the current message buffer is filled; additional time can pass and additional lines can be generated before the JESlog data sets are spun off. For this reason, the values you specify for JESMSG= should be considered approximations.
2. When spin off of the JESlog datasets is in effect, the spin off of the first JESMSGLG dataset will not contain all messages written to it prior to the start of job execution. These "missing" messages will be processed when the job completes execution.

SYSTEM=
Defines the main name(s) or type of system to be used for jobs in this class.

LOCAL
Indicates that jobs in this class are to run on a JES3 local main only.

JES3
Indicates that jobs in this class are to be run on the global or any local main that can satisfy the job requirement.

GLOBAL
Indicates that jobs in this class are to run on the JES3 global only.

ANY
Indicates that jobs in this class can run on any main (global or local) that will satisfy the job requirement.

procname
Indicates, when specified without a preceding slash (/), the only main(s) to be eligible for running jobs in this class. If the "/" precedes the procname(s), this parameter indicates the mains to be excluded from consideration for jobs in this class. The procname must match the NAME parameter on a MAINPROC statement.

TDEPTH=
Specifies the maximum number of jobs of this class that can be scheduled into the total JES3 complex at one time. The value of nnn is a number from 0 to 255.

TLIMIT=
Specifies the maximum number of jobs of other classes that can be scheduled into the total JES3 complex and still allow jobs in this job class to be scheduled. If any of the limits are exceeded, more jobs in this class will not be scheduled. Jobs of this class are scheduled only when the number of jobs running from other classes is equal to or less than the assigned limit.

classname
Specifies the name of another job class.

limit
Specifies the number of jobs of the other class. The maximum value is 255.

The classname and limit parameters may be repeated, in pairs, to indicate the job limit for each class.

TRKGRPS=
Specifies the number of track groups (as defined by the GRPSZ parameter on the BUFFER or SPART statement) JES3 is to allocate to jobs within this class. For guidelines on how to determine the appropriate value for the TRKGRPS parameter for your installation, see "Determining Track Group Allocation Sizes" in *z/OS JES3 Initialization and Tuning Guide*.

prigrps
Specifies the number of track groups to be initially allocated to jobs in this class. The specified value may be 1 through 9.

secgrps
Specifies the number of track groups to be allocated to jobs in this class subsequent to their primary allocation. JES3 allocates the specified amount of spool space after the job uses up its initial allocation, and again (for an unlimited number of times) when the job uses up each secondary allocation and requests more spool space. The specified value may be 1 through 9.

If you specify an invalid subparameter, JES3 uses the parameter default.

Example

In the following example, the job class ABC is defined. This class is associated with job-class group TESTGP. Jobs in this class are to run on processors SYS1 and SYS2. A job in class ABC would only be scheduled on system SYS1 when there are no jobs in classes NOP and QRS running on SYS1. A job in class ABC would only be schedule on system SY2 when there is one job or no jobs running in classes NOP and QRS on SYS2.

```
CLASS,NAME=ABC,GROUP=TESTGP,SYSTEM=(SYS1,SYS2),
MLIMIT=(SYS1,NOP,0,QRS,0),
MLIMIT=(SYS2,NOP,1,QRS,1)
```

COMMDEFN (Communication SSI Definition Records)

Use the COMMDEFN statement to specify the optional user communication subsystem interface (VTAM) parameters.

Statement Summary

Table 12. COMMDEFN Summary

Required/Optional Statement	Optional
Statement Default	`COMMDEFN,APPLID=JES3,LU=255`
Placement in Initialization Stream	This statement must follow the ENDJSAM statement.
Coding Considerations	Ensure that the value you specify on the P parameter is the same as the password specified on the PRTCT parameter of the VTAM APPL application definition statement.
Security Usage	VTAM uses the values specified on the password parameter (P) to verify that the application has authority to run.
Performance Considerations	None
Initialization Stream Overrides	None
Restart or Command Modification	Cold start, warm start, or hot start with refresh for all parameters.

Syntax

```
►►──COMMDEFN──┬──────────────────────────┬──┬──────────────┬──┬──────────────┬──►◄
              │                          │  │ ,P=password  │  │              │
              │           ┌─JES3─────┐   │  └──────────────┘  │          ┌─255──┐   │
              └─,APPLID=──┴─applname─┘   │                    └─,LU=─────┴─nnnn─┘   │
                                         │                                          │
```

Parameters

APPLID=
Indicates the application name as specified to VTAM in a VTAM generation application definition statement (APPL). This parameter is used in establishing the application program interface (API) at OPEN ACB time.

P= Specifies the 1- to 8-character password which is used by JES3 when issuing an OPEN ACB macro. This parameter must be the same as the password specified in the PRTCT parameter of the VTAM APPL application definition statement. If you omit this statement, JES3 assigns a null character string which indicates no password.

LU=

Specifies the limit for the number of active sessions between SNA RJP and VTAM allowed at any one time. This number must not exceed 4095.

If you specify an integer greater than the maximum allowable, JES3 uses the parameter default. If you specify a negative integer or a non-numeric character, JES3 issues an informational message and terminates initialization.

If you specify an invalid subparameter, JES3 uses the parameter default.

COMMENT (*)

Use the comment statement to include comments in a JES3 initialization stream.

Statement Summary

Table 13. Comment (*) Summary

Required/Optional Statement	Optional
Statement Default	None
Placement in Initialization Stream	You can disperse comments freely anywhere within the initialization stream.
Coding Considerations	1. Comment statements begin in column one with an asterisk. 2. Comment statements cannot be continued; however, multiple comment statements can be included consecutively. 3. Comments can also be embedded within initialization statements in the initialization stream. If a comment is embedded within an initialization statement (whether the statement is complete on one line or continued), at least one blank must precede the beginning of the comment. No asterisk is required for embedded comments.
Security Usage	None
Performance Considerations	None
Initialization Stream Overrides	None
Restart or Command Modification	Cold start, warm start, and hot start with refresh.

Syntax

```
►►──*comment──────────────────────────────────────────────────────────►◄
```

Parameters

comment

Indicates, in columns 2 through 71 (after the asterisk), the comment you want to include with the initialization statement. The text may be any length up to 70 characters; to continue comment text, a new comment statement must be specified.

Examples

Sample comment statement:

```
*THIS IS A COMMENT STATEMENT AND REQUIRES AN ASTERISK.
```

Sample comment that exceeds 70 characters and requires two comment statements:

```
*AS MANY COMMENT STATEMENTS AS ARE DESIRED MAY BE PLACED IN
*THE JES3 INITIALIZATION STREAM.
```

Sample comment embedded within an initialization statement:

```
CLASS,NAME=ABC,DEF=YES      This is an embedded comment
```

Sample comments are included within a continued initialization statement:

```
CLASS,NAME=ABC,DEF=YES,     *Comment
    MDEPTH=(SY1,10)         *Comment
```

The following example contains embedded comments, as well as comment statements:

```
CLASS,NAME=ABC,DEF=YES,    This is a comment
*THIS IS A COMMENT STATEMENT
   MDEPTH=(SY1,         This is a comment
*THIS IS A COMMENT STATEMENT
              10)
```

COMPACT (Compaction Table Definition)

Use the COMPACT statement to define a compaction table to JES3. The compaction table is a set of characters which can be transmitted as a compacted character string.

Statement Summary

Table 14. COMPACT Summary

Required/Optional Statement	Optional
Statement Default	None
Placement in Initialization Stream	This statement must follow the ENDJSAM statement.

Table 14. COMPACT Summary (continued)

Coding Considerations	The efficiency of the compaction algorithm depends on correct specification and selection of a compaction table. For example, numeric data files should be transmitted using a table which specifies numeric master characters. Uppercase and lowercase text should be transmitted with a table specifying the most commonly used lowercase letters as master characters. The following characters cannot be specified as a single character; their hexadecimal representation must be used: **Character** **Hex Form** **/** 61 **=** 7E ″ 7F **blank** 40 **(** 4D **)** 5D The SCS characters used as delimiters for data should be included in the compaction character set for better utilization of the compaction function. Including these characters avoids switching in and out of compaction mode on each line of output. The characters to be included are: • NL (new line) – X'15' • CR (carriage return) – X'0D' • FF (forms feed) – X'0C' • TRN (transparency) – X'35' • IRS (Inner Record Separator) – X'1E'
Security Usage	None
Performance Considerations	None
Initialization Stream Overrides	None
Restart and Command Modification	Cold start, warm start, or hot start with refresh for all parameters.

Syntax

```
►►──COMPACT──,NAME=comptab──,MCCT=nn──,CHAR=──(──a──┬──,──┬──)──────────────►
                                                    └──a──┘

►──┬──────────────────────────────────────────────────────────────────────►◄
   └──,DEFAULT=──┬──N──┬──┘
                 └──Y──┘
```

Parameters

NAME=

Specifies the 1- to 8-character (alphanumeric) name of the compaction table. NAME=NO cannot be specified.

MCCT=
Specifies the number of master compaction characters in the CHAR parameter. This number must be an integer from 3 to 15.

CHAR=
Specifies the master and nonmaster compaction characters.

A single 'a' is any EBCDIC character except a comma or a blank. An 'aa' pair is the hexadecimal representation of any 8-bit character. The master compaction characters are the first nn characters in this field. The number of master compaction characters is specified in the MCCT parameter. The master compaction characters are transmitted in a compacted character string using a 4-bit representation. The remaining characters are nonmaster compaction characters which are transmitted in a compacted character string using a 8-bit representation.

The number of master characters specified determines the number of nonmaster characters. The following table lists the number of each allowed.

Master	Nonmaster
3	244
4	236
5	226
6	214
7	200
8	184
9	166
10	146
11	124
12	100
13	74
14	46
15	16

If the list is too long, or if any character is repeated, the COMPACT statement is ignored and an error message is issued.

Note: The compaction algorithm uses each byte of the encoded stream to represent either (1) a single character or (2) two compacted characters. The coded stream always consists of an exact number of bytes. Master characters that stand alone are not compacted to 4 bits, but are coded as a full byte. SCS characters should be defined in this table also.

DEFAULT=
Specifies whether or not this is the default compaction table.

Y Specifies that this is the default compaction table. This parameter is overridden by the COMPACT parameter on the RJPWS statement, the SYSOUT statement, or //*FORMAT control statement.

If you specify an invalid subparameter, JES3 uses the parameter default.

Example

The following example defines a compaction table named MCCT3, having three master compaction characters.

```
COMPACT,NAME=MCCT3,MCCT=3,CHAR=(A,B,C,
01,02,03,04,05,06,07,08,09,0A,0B,0C,0D,0E,0F)
```

CONSOLE for RJP Operator Consoles

Use this CONSOLE statement to define the characteristics of a console for an RJP workstation. This statement assigns message destinations to these type of consoles.

Statement Summary

Table 15. CONSOLE (RJP) Summary

Required/Optional Statement	Optional
Statement Default	None
Placement in Initialization Stream	This statement must follow the ENDJSAM statement.
Coding Considerations	• Only one console can be specified on each CONSOLE statement. • If you used the *SWITCH command to switch a console to another another console, the console will be switched back to itself if a cold start, warm start or hot start with refresh is performed. The console will also be switched back to itself if a hot start with IPL was performed.
Security Usage	Use the LEVEL parameter to specify the set of commands that operators can enter at each console.
Performance Considerations	None
Initialization Stream Overrides	None
Restart or Command Modification	• Cold start, warm start, or hot start with refresh for all parameters. • Use the `*MODIFY,CONFIG` command to dynamically add SNA RJP consoles. • Use the `*MODIFY,O` command to make changes to consoles.

Syntax

```
►►──CONSOLE──,JNAME=name──,TYPE=RJP──,DEST=──┬─msgdest──────────────────────────┬──►
                                             │      ┌─,──────┐                  │
                                             │      ▼        │                  │
                                             └─(────msgdest──┴────)─────────────┘

►──┬──────────────────────┬──┬──────────────────────┬──┬──────────────────────┬──►◄
   │          ┌─120─┐     │  │          ┌─0──┐      │  │          ┌─YES─┐     │
   └─,LL=─────┴─nnn───┘     │  └─,LEVEL=──┴─nn───┘      │  └─,SAVEMSG=───┴─NO──┘     │
```

Parameters

Note: The CONSOLE statement is required when supplying an RJPWS statement.

JNAME=
Specifies the name of a BSC RJP terminal or SNA RJP workstation. If the name specified is the name of a BSC RJP terminal, it must match the name specified in the N parameter on a RJPTERM statement. If the name specified is a SNA RJP workstation, it must match the name specified in the N parameter on a RJPWS statement. The first character of the name cannot be a slash (/).

CONSOLE (RJP)

TYPE=
Specifies that the console being defined is an RJP console.

DEST=
Specifies one or a series of message destinations which represent classes of messages you want sent to the specified RJP console. msgdest can be any set of MCS routing codes or JES3 destination classes. Single routing codes and JES3 destination classes are specified as a single value with commas separating the individual values. Ranges of MCS routing codes can be specified by including a dash between the start of the range and the end of the range. The JES3 destination class and MCS routing codes will be combined into a single set of message destinations used to determine what messages will be displayed on the console.

In addition to messages that are sent as a result of DEST= parameters, the RJP console will also receive messages that are directly related to the operation of the remote work station. This includes messages that pertain to jobs jobmitted from the remote work station (for example, job started and job ended messages), messages that pertain to devices defined to the remote work station, and messages issued in response to commands entered from the RJP console. These additional messages are set even if DEST=NONE is specified for the console.

Table 16. Valid Destination Classes and Their Corresponding Routing Codes

JES3 Destination Class	Equivalent MVS Routing Code/Function	Destination Class Purpose
All	Broadcast	Messages of general interest. These messages are received by MCS consoles receiving broadcast messages and JES3 RJP consoles which include DEST=ALL in their definitions.
ERR	10	Equipment failure and JES3 failsoft and problem messages.
JES	42	General information about JES3.
LOG	41	General information about jobs.
MLG	Hardcopy	All input and output messages.
SEC	9	All security messages.
TAP	3	Messages about JES3-controlled tape requirements.
TP	8	Messages about teleprocessing.
UR	7	Messages about JES3-controlled unit-record equipment.
DALL or D1-D22	43-64	Messages about a user-defined console configuration. The exact JES3 destination class-routing code mappings are: D1=43 D4=46 D7=49 D10=52 D13=55 D16=58 D19=61 D22=64 D2=44 D5=47 D8=50 D11=53 D14=56 D17=59 D20=62 D3=45 D6=48 D9=51 D12=54 D15=57 D18=60 D21=63
MALL or M1-M32	65-96	Messages unique to a JES3 main. Use the MDEST parameter of the MAINPROC statement to define the destination class for messages about specific mains. The exact JES3 destination class-routing code mappings are: M1=65 M5=69 M9= 73 M13=77 M17=81 M21=85 M25=89 M29=93 M2=66 M6=70 M10=74 M14=78 M18=82 M22=86 M26=90 M30=94 M3=67 M7=71 M11=75 M15=79 M19=83 M23=87 M27=91 M31=95 M4=68 M8=72 M12=76 M16=80 M20=84 M24=88 M28=92 M32=96

Table 16. Valid Destination Classes and Their Corresponding Routing Codes (continued)

JES3 Destination Class	Equivalent MVS Routing Code/Function	Destination Class Purpose
SALL or S1-S32	97-128	Messages pertaining to JES3 device setup. Use the XUNIT or JUNIT keywords of the DEVICE statement to define the consoles to receive device related messages. The exact JES3 destination class-routing code mappings are: S1=97 S5=101 S9= 105 S13=109 S17=113 S21=117 S25=121 S29=125 S2=98 S6=102 S10=106 S14=110 S18=114 S22=118 S26=122 S30=126 S3=99 S7=103 S11=107 S15=111 S19=115 S23=119 S27=123 S31=127 S4=100 S8=104 S12=108 S15=112 S20=116 S24=120 S28=124 S32=128

LL=
Specifies the longest line length you want displayed on this RJP console. If the actual line exceeds this length, the console breaks the line at a comma or a blank and continues on the next line.

The default for this parameter is **120**.

LEVEL=
Specifies the JES3 command authority level for RJP consoles. The authority level determines which commands you can enter at this console. For an explanation of authority levels, see "Authorizing Console Commands" in *z/OS JES3 Initialization and Tuning Guide* You can also use RACF to provide command authorization. See *z/OS JES3 Initialization and Tuning Guide* information about using RACF to provide command authorization.

To change authority levels, replace the JES3-supplied exit routine, IATUX18, with your own exit routine.

The default for this parameter is **0**.

If you specify an invalid subparameter, JES3 uses the parameter default.

SAVEMSG=
Specifies whether the console is to receive messages while the console is logged off. If so, messages that would have been received by the console while logged on, will be written to spool and will be displayed when the workstation logs on.

YES
indicates that the console is to receive messages while logged off.

NO
indicates that the console is not to receive messages while logged off.

The default for this parameter is **YES**.

Examples

The following example defines two consoles:

1. WS000 receives destination class S12 and routing codes 22, 23, 24, 25, 26, and 28. It takes defaults for all other parameters.
2. S360A receives no destination classes or routing codes. It has a authority level of 15 and a line length of 80.

```
CONSOLE,TYPE=RJP,JNAME=WS000,DEST=(S12,22-26,28)
CONSOLE,JNAME=S360A,TYPE=RJP,DEST=NONE,
LL=80,LEVEL=15
```

CONSTD (Console Service Standards)

Use the CONSTD statement to define standards for your console configuration. These standards include JES3 command prefix characters, hardcopy log configuration, and special characters to be used in editing commands processed by JES3 console services.

Notes:

1. Certain special characters are used by the syntax scanner as control characters. These characters are ( ) , = / ″ and the blank. If any of these special characters are used, each must be immediately preceded by the escape character which is the quote (″).
2. If you plan to use system symbols in JES3 commands, do not specify an ampersand (&) as a special character to be used in editing commands processed by JES3 console services. For more information, see the section on using system symbols in JES3 commands in *z/OS JES3 Commands*.

Statement Summary

Table 17. CONSTD Summary

Required/Optional Statement	Optional
Statement Default	`CONSTD,EDIT=(",#,,),SYN=8, CIFSS=FSSDEF,PLEXSYN=*,GLOBMPF=NO, DLOG=ON`
Placement in Initialization Stream	This statement must follow the ENDJSAM statement.
Coding Considerations	If you use any of the special characters (, ( ) = / ″ and the blank) as subparameters, you must immediately precede each with the escape character which is the quote (″). Do not code a comma between the ″ and the special character. For example, if you specify the default in the EDIT parameter, you must code: `EDIT=("",#,,)`
Security Usage	None
Performance Considerations	None
Initialization Stream Overrides	None
Restart or Command Modification	Cold start or warm start for all parameters. Use the `*MODIFY,O` command to change the DLOG option.

Syntax

```
►►─CONSTD──┬──────────────────────────────────────────────────────────────────────────────────►
           │                  ┌─″,#,,──────────────────────┐                                  │
           └─,EDIT=──┬──────────┴─(escape,bkspace,,linedel)─┴──┘   │                 ┌─NO──┐   │
                     │                                            └─,GLOBMPF=──┬──────┴─YES─┴──┘
```

```
►──┬─┬─┬─,SYN=──(8)──────────────────┬─┬─┬─,CIFSS=──┬─FSSDEF──┬──┬──►
   │ │ │             ┌──,──────────┐ │ │          └─MSGROUTE─┘  │
   │ │ └─,SYN=──(──▼──synonym──────┴─┘ │
   │ │                                 │
   │ │ ┌─,DLOG=──┬─ON──┬──┬─┬─,PLEXSYN=──(*)──────────────┬─┬──►◄
   │ │ │         └─OFF─┘  │ │ │                            │ │
   │ │ │                  │ │ └─,PLEXSYN=──(──▼──synonym──┴─┘
   │ │ │                  │ │
```

Parameters

EDIT=

Specifies the special characters to be used in the logical editing of console input. (Logical line editing is described in *z/OS JES3 Commands*.) Any character specified or assumed for this parameter must not be specified for the SYN or PLEXSYN parameter.

escape
Specifies the logical escape character.

bkspace
Specifies the character to be used as the backspace key.

, A required comma delimiter.

linedel
Specifies the logical line delete character. There is no default.

GLOBMPF=

Specifies whether messages that are routed to the global processor should be presented to the Message Processing Facility (MPF) on the global processor.

YES
Specifies that messages routed to the global processor should be presented to MPF on the global.

NO
Specifies that messages routed to the global should not be presented to MPF on the global. If **NO** is specified, then MPF processing must be performed on the system that a message originates from.

Messages that originate from the global processor are eligible for MPF on the global regardless of the GLOBMPF value.

The GLOBMPF option does not influence the routing of messages to the global processor. Installations wishing to use the GLOBMPF option must ensure that routing mechanisms are in place to direct the proper set of messages to the global. This could include the activation of DLOG which will result in the hardcopy message set being presented to the global, the definition of a physical console or extended MCS console on the global which receives the proper set of routing codes (or all routing codes), or the marking of target messages with the 'AUTO' attribute together with an extended console on the global receiving 'AUTO' messages.

When using the GLOBMPF function, remember that MPF processing may have to be adjusted as part of a DSI. Ensure that the MPF options on the old and

new global are set up correctly. The SET MPF operator command can be used to change the MPF options for a particular system.

SYN=
Specifies a set of prefixes (or synonyms) to be used as SYSTEM scoped command prefixes. A command entered with a SYSTEM scoped prefix will execute on the system on which the command is entered.

Up to six SYSTEM scoped prefixes may be defined. Each prefix must be one to eight characters in length and must contain characters in the range of X'41' to X'FE'. Prefixes cannot be supersets or subsets of existing SYSTEM or SYSPLEX scoped prefixes. A list of prefixes already in use can be displayed by issuing the DISPLAY OPDATA command.

Prefixes that consist of all numerics are NOT allowed, they will be rejected during initialization. Do not use a prefix that is a command, an abbreviation of a command, or a command invocation. Any character specified or assumed for this parameter must not be specified for the EDIT parameter.

If you define a prefix using this parameter, all prefixes ,including the default character (8), must be specified. You must explicitly define the default character (8) if you want to continue to use it as a SYSTEM scoped command prefix.

If a prefix is specified on both the SYN= and PLEXSYN= parameter, the prefix will be defined as a SYSTEM scoped (SYN=) prefix only.

The prefix (8) is not included in the response to the DISPLAY OPDATA command because it is not registered thru CPF.

PLEXSYN=
Specifies a set of prefixes (or synonyms) to be used as SYSPLEX scoped command prefixes. A command entered with a SYSPLEX scoped prefix, from any system in the SYSPLEX, will execute on the global processor.

Up to six SYSPLEX scoped prefixes may be defined. Each prefix must be one to eight characters in length and must contain characters in the range of X'41' to X'FE'. Prefixes cannot be supersets or subsets of existing SYSTEM or SYSPLEX scoped prefixes. A list of prefixes already in use can be displayed by issuing the DISPLAY OPDATA command.

Prefixes that consist of all numerics are NOT allowed, they will be rejected during initialization. Do not use a prefix that is a command, an abbreviation of a command, or a command invocation. Any character specified or assumed for this parameter must not be specified for the EDIT parameter.

If the default prefix character (*) is not explicitly specified using this parameter, it will be automatically added by JES3. When other prefixes are specified, inclusion of the (*) is recommended for clarity.

If a prefix is specified on both the SYN= and PLEXSYN= parameter, the prefix will be defined as a SYSTEM scoped (SYN=) prefix only.

If JES3 is unable to define (*) as a SYSPLEX prefix, the (*) will be used by JES3 as a SYSTEM scoped prefix.

If you specify an invalid subparameter, JES3 uses the parameter default (*).

CIFSS=
Specifies how the installation wants messages issued within a CI/FSS address space to be routed. They can be routed to a single JES3 destination class or individually for each message.

FSSDEF
Specifies that CI/FSS messages are to be routed to the JES3 destination class specified on the MSGDEST parameter of the FSSDEF initialization statement that defines the CI/FSS to JES3. FSSDEF is the default.

MSGROUTE
Specifies that CI/FSS messages are to be routed according to JES3 message processing for each individual message (such as the MSGROUTE statement), rather than the FSSDEF statement.

DLOG=
Specifies whether JES3 or MVS is to maintain the hardcopy log for the sysplex. When JES3 maintains the hardcopy log, it is DLOG. When MVS maintains the hardcopy log, it is SYSLOG and/or OPERLOG.

ON
Specifies that you want JES3 to write a system log for the sysplex to a spool data set for subsequent processing by output service. The log is written in JES3 format from the global processor.

Note: JES3 systems using DLOG require a value higher than the default for the LOGLIM parameter in the CONSOLxx parmlib member to prevent write-to-log (WTL) buffer shortages and SYSLOG constraints. IBM recommends setting the LOGLIM value equal to or greater than:

```
LOGLIM = 4,000 + (2,000 x n )
```

n is the number of JES3 local processors at your installation.

If necessary, see *z/OS MVS Initialization and Tuning Reference* for more information about the LOGLIM parameter in CONSOLxx.

OFF
Specifies that JES3 is not to maintain the system log for the sysplex. In this case, the hardcopy log will be written to OPERLOG and/or SYSLOG as specified in the CONSOLxx HARDCOPY statement for each system.

DEADLINE (Deadline Type Definition)

Use the DEADLINE statement to define a deadline type for job scheduling; each type determines how JES3 increases the priority of a job so the job is scheduled within a specified time limit.

Statement Summary

Table 18. DEADLINE Summary

Required/Optional Statement	Required
Statement Default	None
Placement in Initialization Stream	This statement must follow the ENDJSAM statement.
Coding Considerations	You can specify up to 36 DEADLINE statements in an initialization stream.
Security Usage	None
Performance Considerations	None

Table 18. DEADLINE Summary (continued)

Initialization Stream Overrides	None. However, the JES3 *CANCEL,DEADLINE,PURGE command stops deadline scheduling being applied to jobs in the system.
Restart or Command Modification	Cold start, warm start, or hot start with refresh for all parameters. Use the `*MODIFY,L` command to modify the deadline parameters.

Syntax

```
►►──DEADLINE──,type=──(──prtyset,timeset──┬──────────────────────┬──)──────────────►◄
                                          └──,prtychng,timincr───┘
```

Parameters

type
Specifies a single-character identifier from A to Z or 0 to 9. To apply this deadline definition to a job, the type must be indicated in the DEADLINE parameter on the job's //*MAIN control statement.

prtyset
Indicates the initial change in priority. This parameter is a priority level (1-14) to be set, or an incremental value to be added to a job's priority. An incremental value must be preceded by a plus sign (+). If the prtyset value is less than or equal to the job's priority, the job priority is not modified.

timeset
Specifies the time in minutes, hours, or TOD clock time, when a job priority is to be set to prtyset. This parameter represents the lead time for a job, that is, the amount of time required for a job to start and finish by the deadline associated in the DEADLINE parameter of the //*MAIN control statement.

To indicate time in minutes, specify the letter M immediately following the time; such as 1M for 1 minute. To indicate time in hours, specify the letter H immediately following the time; such as 1H for 1 hour. The range of acceptable values is from 0 to 1440 minutes *or* hours (depending on whether M or H is specified).

To indicate TOD clock time, specify the time in hours ***and*** minutes (for example, 1045 indicates 10 hours and 45 minutes). The range of acceptable values is from 0 to 1440.

prtychng
Specifies either a subsequent priority level change overriding prtyset or subsequent increments to be added to prtyset. If you indicate a new priority level, it will be the priority of a job until its completion. If you indicate a priority increment, it will be added periodically until a job either completes or reaches the highest priority level (14). An incremental value must be preceded by a plus sign (+). When prtychng is specified, timincr must also be specified.

timincr
Specifies the amount of time in minutes, hours, or TOD clock time before the prtyset priority is to be updated by prtychng. To indicate time in minutes,

specify the letter M following the time; such as 1M for 1 minute. To indicate the time in hours, specify the letter H following the time; such as 1H for 1 hour.

To indicate TOD clock time, specify the time in hours and minutes (for example, 1045 indicates 10 hours and 45 minutes).

Example

The following example shows how a deadline type is applied to a job. Also shown are the //*MAIN and DEADLINE statements which specify the job deadline and deadline type. The //*MAIN statement indicates that the deadline is 8 a.m. March 21, 1975 and the deadline type is A. The DEADLINE statement defines type A, which causes a job priority to be set to 10 one hour prior to the job's deadline and causes the priority to be incremented by 1 every 30 minutes until the job is complete.

```
DEADLINE,A=(10,1H,+1,30M)
//*MAIN DEADLINE=(800,A,032175)
```

Event	Time	Priority
Job submitted	0400	PRTY=5
	0700	Set PRTY=10
	0730	Increment+1 to 11
Deadline	0800	Increment+1 to 12
	0830	Increment+1 to 13
Job complete	0840	

DESTDEF (Define Destinations for Inbound SYSOUT)

Use the DESTDEF initilaizaiton statement to specify how inbound SYSOUT data sets from other NJE nodes are to be processed at this node.

Statement Summary

Table 19. DESTDEF Summary

Required/Optional Statement	Optional
Statement Default	None
Placement in Initialization Stream	This statement must follow the ENDJSAM statement.
Coding Considerations	The maximum length of a userid or device name is 8 characters. Wildcards are permitted in the names: • * - represents any zero or more characters. • ? - represents any one character.
Security Usage	None
Performance Considerations	None
Initialization Stream Overrides	NETHOLD=YES on the NJERMT initialization statements overrides what you specify on the DESTDEF statement. If NETHOLD=YES is specified on the NJERMT statement for the home node, what you specify on the DESTDEF statements will have no effect.

Table 19. DESTDEF Summary (continued)

Restart or Command Modification	Cold start, warm start, or hot start with refresh for all parameters. Use the `*MODIFY,CONFIG` command to add destinations for your inbound SYSOUT.

Syntax

```
►►──DESTDEF──┬──────────────────────────────────────────────────────────────────────────────┬──►
             │                                   ┌──────────────────────────────────┐        │
             │                                   ▼                                  │        │
             └─,──USERID=──(──user──┬──────────────────────────────────────────┬──)──┘        │
                                    └─,user──┘                                 │
►──┬──────────────────────────────────────────────────────────────────────────────────────────┬──►◄
   │                                   ┌──────────────────────────────────┐                  │
   │                                   ▼                                  │                  │
   └─,──DEVICE=──(──dev──┬──────────────────────────────────────────┬──)──┘                  │
                         └─,dev──┘                                  │
```

Parameters

DEVICE=
Specifies that inbound NJE SYSOUT data destined for the named devices should be placed on the writer queue (made unavailable for TSO RECEIVE), even if the device name is otherwise not defined to JES3.

USERID=
Specifies that inbound NJE SYSOUT data destined for the named users should be placed on the hold queue and made available for TSO RECEIVE by the named users, even if there is a JES3 device with the same name.

Example

The following example specifies that the inbound NETDATA destined for FRED or SUE should be made available for TSO RECEIVE even if these match the JNAME of a JES3 device. Inbound NETDATA destined for OEMPRTxx should be placed on the writer queue even if there is no JES3 device with a matching JNAME.

```
DESTDEF,USERID=(FRED,SUE),DEVICE=(OEMPRT*)
```

DEVICE (Define Processor Status)

Use this form of the DEVICE statement (there are two other forms of the DEVICE statement) to define the initial status of mains in a JES3 complex. If you omit this DEVICE, the processor in question is initialized online to every processor in the complex. For more information on defining mains, see "Defining Mains" in *z/OS JES3 Initialization and Tuning Guide*.

Statement Summary

Table 20. DEVICE (Processor Status) Summary

Required/Optional Statement	Optional
Statement Default	None

Table 20. DEVICE (Processor Status) Summary (continued)

Placement in Initialization Stream	This statement must follow the ENDJSAM statement.
Coding Considerations	
Security Usage	None
Performance Considerations	None
Initialization Stream Overrides	None
Restart or Command Modification	• Hot start with refresh for all parameters. • You can add a DTYPE=SYSMAIN DEVICE initialization statement during a hot start with refresh as long as the corresponding MAINPROC statement has already been defined. • You can delete a DTYPE=SYSMAIN DEVICE initialization statement during a hot start with refresh as long as the corresponding MAINPROC statement is not also deleted.

Syntax

```
                                                  ┌─,──────────────────┐
                                                  ▼            ┌─ON──┐
►►──DEVICE──,DTYPE=SYSMAIN──,JNAME=main1──,JUNIT=──(──main2,,──┴─OFF─┴──)──────►◄
```

Parameters

DTYPE=
Specifies that this statement defines the initial status for a main.

JNAME=
Specifies the name of a main whose initial status you are defining. The name you specify for main1 must match the main name as defined on a MAINPROC statement.

JUNIT=
Specifies the main (main2) with which main1 will communicate. Repeat this group of subparameters for each main in the JES3 complex.

,main2
main2 must be the name of the main that will communicate with main1. main2 can be specified as *ALL, in which case the online/offline status you specify applies to all mains in the complex.

,
Specifies the absence of the destclass subparameter. This subparameter, which you can code on other forms of the DEVICE statement, cannot be coded on this form of the statement.

{OFF|ON}
Specifies the initial status of the main. OFF specifies offline; ON specifies online.

Example

This example shows four mains, SY1, SY2, SY3, and SY4 interconnected via XCF.

DEVICE (processor status)

A sample initialization stream follows the drawing. This stream contains MAINPROC statements that define each main and DEVICE statements that define the main's connections.

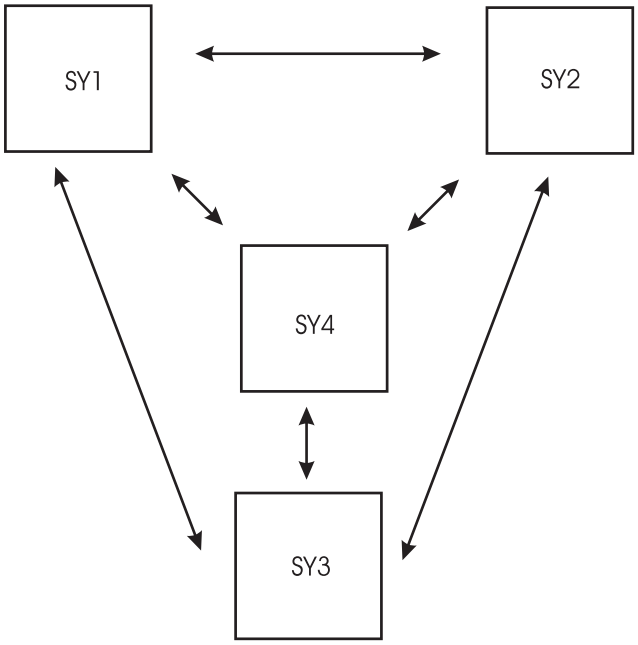


```
              .
              .
              .
MAINPROC,NAME=SY1,SYSTEM=JES3,...
MAINPROC,NAME=SY2,SYSTEM=JES3,...
MAINPROC,NAME=SY3,SYSTEM=JES3,...
MAINPROC,NAME=SY4,SYSTEM=JES3,...
              .
              .
              .
DEVICE,DTYPE=SYSMAIN,JNAME=SY1,JUNIT=(,SY1,,ON,,SY2,,ON,,SY3,,OFF,SY4,ON)
```

In the previous DEVICE statement,SY1, SY2, and SY4 are initially online to SY1. SY3 is initially offline to SY1.

```
DEVICE,DTYPE=SYSMAIN,JNAME=SY2,JUNIT=(,*ALL)
```

In the previous DEVICE statement, SY1, SY2, SY3, and SY4 are initially online to SY2 (by default).

```
DEVICE,DTYPE=SYSMAIN,JNAME=SY3,JUNIT=(,SY1,,,,SY2,,OFF,,SY3,,,,SY4)
```

In the previous DEVICE statement, SY1, SY3, and SY4 are initially online to SY3. SY2 is initially offline to SY3.

There is no DEVICE statement for SY4. This indicates that SY1, SY2, SY3, and SY4 are initially online to SY4 (as is the case in the SY2 example).

DEVICE (Define a Network BSC line or CTC Connection)

Use this form of the DEVICE statement to define a BSC line or a CTC connection that connects your node to another node in a network. You must code a DEVICE statement for each such line. or connection. For more information on defining a line, or connection, see "Defining Communication Lines" in *z/OS JES3 Initialization and Tuning Guide*.

Statement Summary

Table 21. DEVICE (Network BSC line)

Required/Optional Statement	Optional
Statement Default	None
Placement in Initialization Stream	This statement must follow the ENDJSAM statement.
Coding Considerations	1. Although you cannot code the DGROUP parameter, JES3 assigns all network lines or connections to the device group named NETWORK. 2. The JUNIT parameter has a dependency on the NAME parameter of the MAINPROC statement. During a hot start with refresh, the MAINPROC statement is not processed; the MAINPROC from the last warm or cold start is used. Therefore, if you add a MAINPROC statement during a hot start with refresh, JES3 ignores it. JES3 issues error messages if the JUNIT parameter of the DEVICE statement references a MAINPROC statement that was added during a hot start with refresh.
Security Usage	None
Performance Considerations	None
Initialization Stream Overrides	None
Restart or Command Modification	• Cold start, warm start, or hot start with refresh for all parameters.

Syntax

```
►►──DEVICE──,DTYPE=NJELINE──,JNAME=linename──,JUNIT=──────────────────────────►

                          ┌──,,──────────────────────────┐
►─(──┬─/devnum─┬──┬──────┴──,main──,TP──┬─,ON──┬──┬──)──,NUMDEV=──nnnn──────────►◄
     └─devnum──┘  │                     └─,OFF─┘  │
                  └──────────────────────────────┘
```

Parameters

DTYPE=
Specifies that this statement defines a BSC line or a CTC connection for a network of nodes.

JNAME=
Specifies a name of a BSC line or CTC connection. The first character of the

name cannot be a slash (/). The variable ***linename*** must match the name you specify on the LINE parameter of the JES3 NJERMT initialization statement that defines your node. The linename is a 1-8 character name; the first character of the name cannot be a slash (/).

JUNIT=
Specifies information about the line or CTC connection. You must code the following parameters for the global. You must repeat these parameters for each local main that has access to the line and could become the global.

/devnum | devnum
Specifies the device number (by 3-digit or 4-digit hexadecimal number). A slash (/) preceding the device number is not required. Device numbers can be specified by any of the following formats:

```
ddd
dddd
/ddd
/dddd
```

ddd and dddd represent the device numbers.

address
Specifies the address of the BSC line or CTC connection.

main
Specifies the name of a main that has access to the linewhen the main is global. The variable ***main*** must match the name of the main that you define on a MAINPROC statement.

Alternatively, a main name of *ALL can be used. Use of *ALL indicates that all mains in the complex have access to this line when the main is the global. When *ALL is used, no other group of *devnum,main,TP,ON | OFF* can be used on the JUNIT parameter of the DEVICE initialization statement, and the values specified for *devnum*, TP, and ON | OFF are the same for all mains.

TP
Specifies the destination class that is to receive messages about this line. or connection.

{OFF | ON}
Specifies the initial online/offline status of the line or connection as viewed by the named main.

NUMDEV=
The value, *nnnn*, specifies the number of devices to be defined by this DEVICE statement, starting with the specified JUNIT. For example, if a DEVICE statement defines a JUNIT of 140 and NUMDEV=32, the statement defines 32 statements with device numbers of 140 through 15F. The NUMDEV parameter requires at least one JUNIT with a device number (that is, a device number other than NONE).

When NUMDEV is used, the JNAME parameter specifies a prefix rather than a complete JNAME. A four digit device number is built based on the JUNIT and NUMDEV and concatenated with the prefix to form a complete JNAME. For example, if the JUNIT is 140, the specified JNAME is LINE, and NUMDEV=32, the statement will define 32 JNAMEs, LINE0140 through LINE015F.

If the JUNIT combines mains with different device numbers (for example, `JUNIT=(140,SY1,,ON,8C0,SY2,,ON)`, the first specification is used to build the JNAMEs (`140` is this case).

If the JUNIT combines mains with device numbers and NONE (for example, `JUNIT=(NONE,SY1,,ON,8C0,SY2,,ON)`, the first group with an actual device number is used to build the JNAMEs (`8C0` in this case).

Example

The following example defines a BSC line named LINE1.

```
DEVICE,DTYPE=NJELINE,JNAME=LINE1,JUNIT=(207,SY1,TP)
```

The following example defines three BSC lines named LINEA123, LINEA124, and LINEA125 that can be accessed from all mains:

```
DEVICE,DTYPE=NJELINE,JNAME=LINE,JUNIT=(A123,*ALL,TP,ON),NUMDEV=3
```

DEVICE (Define I/O Devices)

Use this form of the DEVICE statement to define a device that JES3 can use:
- to satisfy its own functions (JES3 device).
- to satisfy the needs of a job (execution device).
- as a JES3 device or as an execution device (shared device).

Because JES3 varies assignable devices and all execution devices online or offline to MVS as well as to JES3 at initialization, satisfy all conditions necessary for the MVS VARY command to execute properly before initializing JES3.

If you want two or more mains to share a device, use the XUNIT parameter to define each main. These devices are called **shared devices**.

Deciding whether to specify a device as shared or not (using the XUNIT parameter) depends on how the device is attached to the system. Channel-attached devices, such as 3900 printers, that you want to operate under the control of an output writer functional subsystem (FSS), must be defined as shared. Those other devices (ex: 3827 printers), which you want to operate under control of an FSS yet are not channel-attached, must not be defined as shared.

Except for RJP devices, you must code one DEVICE statement for each I/O device that you want JES3 to use.

For more information on defining I/O devices, see “Defining I/O Devices to JES3” in *z/OS JES3 Initialization and Tuning Guide*.

Statement Summary

Table 22. DEVICE (Define I/O Device) Summary

Required/Optional Statement	Required
Statement Default	None
Placement in Initialization Stream	This statement must follow the ENDJSAM statement.

Table 22. DEVICE (Define I/O Device) Summary (continued)

Coding Considerations	• Dependent on initialization statements, FSSDEF, MAINPROC, RJPLINE, RJPTERM, SETNAME, RJPWS.
	• Do not code the CKPNTPG and CKPNTSEC parameters on the same DEVICE statement; they are mutually exclusive.
	• If you specify the SELECT parameter, JES3 ignores the HEADER parameter.
	• For a SNA-attached AFP printer, specifying JUNIT=(/devnum...) or JUNIT=(devnum...) is not valid. Instead, you must use a comma as a place holder when specifying the JUNIT parameter. The JUNIT parameter cannot precede the DTYPE parameter.
	• Before specifying LDENS=YES, consult the software component description for the receiving unit to determine whether or not the software supports the set line density command. If it does not and the command is sent, the results are unpredictable.
	• If the device is any AFP printer other than a 3800 model 3, JES3 assumes MODE=FSS.
	• If you use the RDFEAT parameter, place it following the DTYPE parameter.
	• If you omit the XLATE parameter when defining IBM 3211, IBM 4245, or IBM 4248 devices, JES3 automatically suppresses translation of unprintable characters since the translation is performed by the device itself (that is, JES3 uses a default value of XLATE=NO for these device types).
	• Devices within a specific XTYPE should have compatible characteristics. For the 3820 printer, XTYPE is not a valid parameter.
	• The XTYPE parameter must precede the XUNIT parameter if you specify both. Do not specify XUNIT for an IBM 3820 printer.
	• If the SELECT parameter is specified, the HEADER and BURST parameters on this statement are ignored and no header, or burst is used.
	
	When specifying the SELECT=BEn parameter for two devices, the SELECT parameter can be the same on the two DEVICE statements for those devices. However, the LEN parameters cannot be the same because unpredictable results can occur: For example, the following is the correct way to indicate this in the initialization stream:
	
	`DEVICE,DTYPE=RMTPRINT,JNAME=WS000PR1,`
	`SELECT=BE2,LEN=1`
	`DEVICE,DTYPE=RMTPRINT,JNAME=WS000PR1,`
	`SELECT=BE2,LEN=2`
	
	When SELECT=EXn is specified, you cannot define more exchange devices than there are physical disks available to support them.
	
	If you specify the EDS parameter for a device that is not a SNA RJP device or for a device that uses Peripheral Data Set Information Record (PDIR) support, JES3 ignores the parameter.

Table 22. DEVICE (Define I/O Device) Summary (continued)

Coding Considerations	• The JUNIT parameter has a dependency on the NAME parameter of the MAINPROC statement. During a hot start with refresh, the MAINPROC statement is not processed; the MAINPROC from the last warm or cold start is used. Therefore, if you add a MAINPROC statement during a hot start with refresh, JES3 ignores it. JES3 issues error messages if the JUNIT or XUNIT parameter of the DEVICE statement references a MAINPROC statement that was added during a hot start with refresh.
Security Usage	None
Performance Considerations	None
Initialization Stream Overrides	None. However, for information on output service overrides, see *z/OS JES3 Initialization and Tuning Guide*.

Table 23. DEVICE (Define I/O Device) Summary - cont.

Restart or Command Modification	• Warm start, cold start, or hot start with refresh for all parameters. Omitting one statement might cause a subgeneric split or loss of a device. Omitting all statements for a device causes loss of the device as a JES3-managed device. Hot start with refresh applies for all parameters. • When a hot start with refresh is to be performed, consider the following: 1. You cannot delete an FSS managed device if the FSS is active. It does not matter whether a writer was using the device or not. The exception is if the FSS is active on the global and the global was IPLed prior to performing the hot start with refresh. 2. You cannot add an FSS managed device to an existing FSS (via the FSSNAME parameter) if the FSS is active. The exception is if the FSS is active on the global and the global was IPLed prior to performing the hot start with refresh. 3. You cannot change the device number in the JUNIT parameter of an FSS managed device if the FSS is active and a writer is using the device. The exception is if the FSS is active on the global and the global was IPLed prior to performing the hot start with refresh. 4. You cannot delete a device number/system name from the JUNIT parameter of an FSS managed device if the FSS is active and a writer is using the device. The exception is if the FSS is active on the global and the global was IPLed prior to performing the hot start with refresh. 5. Omitting one statement might cause a subgeneric split or loss of a device. Omitting all statements for a device causes loss of the device as a JES3 managed device. (This is also true of warm and cold starts.) 6. If an FSS managed device is being used by a writer, the following parameters on the DEVICE statement will be ignored if they are changed. These parameters will be restored from checkpointed information when the writer is started: – MODE – Online/Offline status (from JUNIT) – CKPNT/CKPNTPG/CKPNTSEC – NPRO – SETUPMSG The exception is if the FSS is active on the global and the global was IPLed prior to performing the hot start with refresh. • Use the `*MODIFY,CONFIG` command to dynamically add VTAM attached FSS printers. You cannot add a DEVICE statement for an FSS managed device if the FSS is active. The FSS must be shut down prior to adding the device. • Use the `*MODIFY,T` or `*MODIFY,W` command to dynamically modify VTAM attached FSS printers. • Use the `*MODIFY,F,D=` command to change the MODE parameter. • Use the `*MODIFY,W` command to change the DGRPONLY, DYNAMIC, PDEFAULT, SETUPMSG, PDIR, and XLATE parameters.

Syntax

```
►►──DEVICE──┬─ALTPM─┬─┬─BURST=─┬─┬─CARRIAGE=─┬─┬─CB=─┬─┬─CHARS=─┬─►
            └──────┘ └────────┘ └───────────┘ └─────┘ └────────┘

►─┬─CHNSIZE=─┬─┬─,CKPNT=nnnnn─┬─┬─,CKPNTPG=nnnnn─┬─┬─,CKPNTSEC=nnnnn─┬─►
  └──────────┘ └──────────────┘ └────────────────┘ └─────────────────┘

►─┬─COPYMARK=─┬─┬─DGROUP=─┬─┬─DGRPONLY=─┬─┬─DTYPE=─┬─┬─DYNAMIC=─┬─►
  └──────────┘ └─────────┘ └──────────┘ └───────┘ └─────────┘

►─┬─FEATURES=─┬─┬─FLASH=─┬─┬─FORMS=─┬─┬─FSSNAME=─┬─┬──────────────────┬─►
  └──────────┘ └───────┘ └───────┘ └──────────┘ └─,HEADER=─┬─YES─┬─┘
                                                           └─NO──┘

►─┬─,JNAME=name─┬─┬─,JUNIT=─┬─JUNIT Parms─┬─┤ Syntax, DEVICE, More Parameters (1) ├──►◄
  └─────────────┘ └─────────┘             └
```

ALTPM

```
├──,ALTPM=──altpmode1,──┬──────────────────────┬──┤
                        │ ┌──────────────────┐ │
                        │ │                  ▼ │
                        │ │ ┌──────────────┐ │ │
                        │ │ │          (1) │ │ │
                        │ │ └─altpmoden────┘ │ │
                        │ └──────────────────┘ │
                        └──────────────────────┘
```

BURST=

```
├──,BURST=──┬─YES─┬──┬──────┬──┤
            └─NO──┘  └─,M───┘
```

CARRIAGE=

```
├──,CARRIAGE=──┬─YES─┬──,──┬─STANDARD─┬──┤
               └─NO──┘     └─carrtape─┘
```

CB=

```
├──,CB=──┬─N─┬──┤
         └─J─┘
         └─D─┘
```

CHARS=

```
                          ┌─STANDARD──────────────────┐
                          │                           │
                          │ ┌──────────────────────┐ │
                          │ │                      ▼ │
                          │ │ ┌──────────────────┐ │ │
                          │ │ │              (2) │ │ │
                          │ │ └─idn──────────────┘ │ │
                          │ └──────────────────────┘ │
├──,CHARS=──┬─YES─┬──,──┬─id1──,──┘                  └──┤
            └─NO──┘
```

DEVICE (I/O)

CHNSIZE=

```
├──,CHNSIZE=──┬─DS──────────┬──────────────────────────────────────────┤
              ├─nnn─────────┤
              └─(nnn,mmm)───┘
```

COPYMARK=

```
├──,COPYMARK=──┬─C─┬──────────────────────────────────────────────────┤
               ├─N─┤
               └─J─┘
```

DGROUP=

```
├──,DGROUP=──┬─LOCAL───┬──────────────────────────────────────────────┤
             └─grpname─┘
```

DGRPONLY=

```
├──,DGRPONLY=──┬─NO──┬──────────────────────────────────────────────┤
               └─YES─┘
```

DTYPE=

```
├──,DTYPE=──┬─PRTxxxxx──┬──────────────────────────────────────────┤
            ├─PUNxxxx───┤
            ├─RDRxxxx───┤
            ├─RMTxxxx───┤
            ├─TAxxxxx───┤
            └─username──┘
```

DYNAMIC=

```
                          ┌─,0─┐
├──,DYNAMIC=──(──┬─YES──────┬──┬──────────────────────────────────────┤
                 │          │  │
                 └─YES,timeout┘  │
                                 │
                 └─NO──────┬─,+─┬──┘
                           └────┘
```

FEATURES=

```
├──,FEATURES=──(──┬──────────┬──┬──────────┬──)──────────────────────┤
                  └─CGS2─────┘  └─.SS──────┘
```

FLASH=

```
                 ┌─YES─┐          ┌─STANDARD─┐
├──,FLASH=──────┤─NO──┤──────,──┤─name─────┤──────────────────────────┤
                 └─────┘          └──────────┘
```

FORMS=

```
├──,FORMS=──┬─YES─┬──,──┬─STANDARD─┬──────────────────────────────┤
            └─NO──┘     └─forms────┘
```

FSSNAME=

```
├──,FSSNAME=fssname──────────────────────────────────────────────┤
```

JUNIT Parms:

```
├──(──┬─/devnum─┬──┬──┬──,main──,msgdest──,──┬─ON──┬──┬──┬──)──────────┤
      ├─devnum──┤  │  │                      └─OFF─┘  │  │
      └─NONE────┘  │  └──,*ALL──,msgdest──,──┬─ON──┬──┘  │
                   │                         └─OFF─┘     │
                   └──────────────────────────────────────┘
```

Notes:

1 You can specify altpmode1 to altpmode8.

2 id2, id3, id4,...

Syntax, DEVICE, More Parameters (1)

```
►►──┬─LDENS=─┬──┬──,LINELIM=nnnnnnnnn──┬──┬──────────────────────────►
    │        │  │                      │  │
    │        │  │                      └─+┘
    │        │  │
►───┬─MODE=─┬──┬─MODIFY=─┬──┬─NPRO=─┬──┬─NUMDEV=─┬──┬─OPACTLOG=─┬──────►
    │       │  │         │  │       │  │         │  │           │
►───┬─PAGELIM=─┬──┬─PDEFAULT=─┬──┬─PDIR=─┬──PM=pmode1──┬──┬──────────►
    │          │  │           │  │       │             │  │
    │          │  │           │  │       │             │  │
    │          │  │           │  │       │             │  │
►───┬─RDFEAT=─┬──┬─Syntax, DEVICE, More Parameters (2)─┬──────────────►◄
    │         │  │                                    │
    │         │  │                                    │
    │         │  │                                    │
```

LDENS=

```
├──,LDENS=──┬─NO──┬──────────────────────────────────────────────┤
            └─YES─┘
```

MODE=

```
├──,MODE=──┬─COMP─┬──────────────────────────────────────────────┤
           └─FSS──┘
```

DEVICE (I/O)

MODIFY=

```
├──,MODIFY=──(──┬─YES─┬──,──┬─STANDARD──────────┬──)──────────────────────────┤
               └─NO──┘     └─name──,──┬─0─┬──┘
                                      ├─1─┤
                                      ├─2─┤
                                      └─3─┘
```

NPRO=

```
├──,NPRO=──┬─STANDARD─┬──────────────────────────────────────────────────────┤
           ├─nnnn─────┤
           └─NO───────┘
```

NUMDEV=

```
            (1)
├──,NUMDEV=──────nnnnn──────────────────────────────────────────────────────┤
```

OPACTLOG=

```
├──,OPACTLOG=──┬─YES─┬──────────────────────────────────────────────────────┤
               └─NO──┘
```

PAGELIM=

```
├──,PAGELIM=──┬─0───────┬──────────────────────────────────────────────────┤
              ├─nnnnnn──┤
              ├─nnnnnn+─┤
              └─NO──────┘
```

PDEFAULT=

```
├──,PDEFAULT=──┬─NONE────────┬──────────────────────────────────────────────┤
               ├─CHARS───────┤
               ├─FCB─────────┤
               └─CHARS,FCB───┘
```

PDIR=

```
├──,PDIR=──┬─BDS─┬──────────────────────────────────────────────────────────┤
           └─ALL─┘
```

RDFEAT=

```
├──,RDFEAT=──┬─Y─┬──────────────────────────────────────────────────────────┤
             └─N─┘
```

Notes:

1 You must specify at least one JUNIT or XUNIT with a device number when using NUMDEV.

2 pmode2, pmode3,...to a maximum of pmode8.

Syntax, DEVICE, More Parameters (2)

```
►►──┬──────────────┬──┬──────────┬──┬──────────┬──┬──────────┬──►
    └,RECORDS=nnn──┘  └─ SELECT= ─┘  └─ SETUPMSG= ─┘  └,SVF=NO──┘

►──┬──────────┬──┬──────────┬──┬──────────────────────────┬──►
   └─ STACKER= ─┘  └─ TRAIN= ─┘  └,WC=──┬─STANDARD─────────┬─┘
                                         │      ┌─,─┐       │
                                         └(──────▼─c─────)──┘

►──┬──────────┬──┬──────────┬──┬──────────┬──┬──────────┬──►◄
   └─ WS= ────┘  └─ XLATE= ─┘  └─ XTYPE= ─┘  └─ XUNIT= ─┘
```

SELECT=

```
├──,SELECT=──┬─BEn──┬──────────┬──┬──────────────────┬──┬──────────┤
             │      └,LEN=nnn──┘  │                  │  │
             │                    └,EDS=──┬─NO──┬──┘  │
             │                            └─YES─┘     │
             └─EXn──┬──────────┬──┬──────────────────┬──┘
                    └,LEN=nnn──┘  │                  │
                                  └,EDS=──┬─NO──┬──┘
                                          └─YES─┘
```

SETUPMSG=

```
├──,SETUPMSG=──┬─YES─┬──────────────────────────────────────────────┤
               └─NO──┘
```

STACKER=

```
├──,STACKER=──┬─YES─┬──,──┬─STANDARD─┬──────────────────────────────┤
              └─NO──┘     │          │
                          ├─S────────┤
                          └─C────────┘
```

TRAIN=

```
├──,TRAIN=──┬─YES─┬──,──┬─STANDARD─┬──────────────────────────────┤
            └─NO──┘     └─train────┘
```

WS=

```
├──,WS=──┬─STANDARD──────────────────────┬──────────────────────────────┤
         │          ┌─,─┐                │
         ├─(──────c─────)─────────────────┤
         └─D,T,F,C,U,FL,CM,SS,CL,L,P,PM──┘
```

XLATE=

```
            (1)    ┌─YES─┐
├──,XLATE=──────── └─NO──┘──────────────────────────────────────────────┤
```

XTYPE=

```
├──,XTYPE=──(──name──┬─CA──────────────┬──────────────────────────────┤
                     ├─TA──────────────┤
                     ├─GR──────────────┤
                     ├─UR──────────────┤
                     └─DA──┬──────────┬┘
                           └─,──┬─RM─┬─┘
                                └─PR─┘
```

XUNIT=

```
                                   ┌──────────────────────────────────┐
                                   ▼                                  │
                                                   ┌─ON──┐          │
├──,XUNIT=──(──┬─/devnum─┬──┬──────,main──,msgdest──┴─OFF─┴──┬──────┬──)──────────┤
              └─devnum──┘  │                                  │      │
                           └──,*ALL──,msgdest──┬─ON──┬──────┘      │
                                               └─OFF─┘             │
```

Notes:

1 When defining IBM 3211, IBM 4245, or IBM 4248 devices, JES3 uses NO as the parameter default.

Parameters

Table 24. Valid Parameters by Device for the DEVICE Initialization Statement

Parm	All Devices	All Printers	All Punches	3800-1	3800-3 3800-6 3800-8	3820	AFP1	4245 & 4248	3525	SNA RJP
ALTPM=					valid					
BURST=		valid	valid	valid	valid	valid	valid	valid	valid	
CARRIAGE=		valid		valid	valid	valid	valid	valid		
CB=				valid				valid		
CHARS=				valid	valid	valid	valid			
CHNSIZE=										valid
CKPNT=		valid	valid	valid	valid	valid	valid	valid	valid	
CKPNTPG=					valid	valid	valid			

Table 24. Valid Parameters by Device for the DEVICE Initialization Statement (continued)

Parm	All Devices	All Printers	All Punches	3800-1	3800-3 3800-6 3800-8	3820	AFP1	4245 & 4248	3525	SNA RJP
CKPNTSEC=					valid	valid	valid			
COPYMARK=					valid	valid	valid			
DGROUP=	valid	valid	valid	valid	valid	valid	valid	valid	valid	
DGRPONLY=	valid	valid	valid	valid	valid	valid	valid	valid	valid	
DTYPE=	valid	valid	valid	valid	valid	valid	valid	valid	valid	valid
DYNAMIC=		valid	valid	valid	valid	valid	valid	valid	valid	
FEATURES=				valid			valid			
FLASH=				valid						
FORMS=		valid	valid	valid	valid	valid	valid	valid	valid	
FSSNAME=					valid	valid	valid			
HEADER=		valid	valid	valid	valid	valid	valid	valid	valid	
JNAME=	valid	valid	valid	valid	valid	valid	valid	valid	valid	valid
JUNIT=	valid	valid	valid	valid	valid	valid	valid	valid	valid	valid
LDENS=										valid
LINELIM=		valid	valid	valid	valid	valid	valid	valid	valid	
MODE=					valid	valid	valid			
MODIFY=				valid			valid			
NPRO=					valid		valid			
NUMDEV=			valid	valid	valid		(1)	valid	valid	
OPACTLOG=					valid	valid	valid			
PAGELIM=		valid	valid	valid	valid	valid	valid	valid	valid	
PDEFAULT=					valid	valid	valid			
PDIR=										valid
PM=		valid	valid	valid	valid	valid	valid	valid	valid	
RDFEAT=									valid	
RECORDS=		valid	valid	valid	valid	valid	valid	valid	valid	
SELECT=										valid
SETUPMSG=					valid	valid	valid			
SVF=										valid
STACKER=				valid			valid			
TRAIN=							valid	valid		
WC=		valid	valid	valid	valid	valid	valid	valid	valid	
WS=		valid	valid	valid	valid	valid	valid	valid	valid	
XLATE=		valid	valid	valid	valid	valid	valid	valid	valid	valid
XTYPE=			valid	valid	valid		(1)	valid	valid	
XUNIT=			valid	valid	valid		(1)	valid	valid	

Notes:

1. Parm is not valid for VTAM-attached printers.

DEVICE (I/O)

The following chart shows required and optional parameters for defining a JES3 device, execution device, or shared device. For each device type, use only the required or optional parameters. R indicates a required parameter; O indicates an optional parameter.

DEVICE statement parameters	Device type		
	JES3	Execution	Shared
DTYPE=	R (See notes 1, 2, and 3)		R (See notes 1, 2, and 3)
DGROUP=	O (See notes 1, 2, and 3)		O (See notes 1, 2, and 3)
JNAME=	R (See note 3)		R (See note 3)
JUNIT=	R (See note 3)		R (See note 3)
XTYPE=		R	R
XUNIT=		R	R
printer or punch parameters (See note 2)	O	O	O

Notes:

1. If you code DTYPE=PRTxxxxx, or PUNxxxx, or RDRxxxx, or TAxxxxx, and the JUNIT parameter specifies a device number, you must code the XTYPE and XUNIT parameters.
2. If you define a printer as a JES3 device and that printer is also defined on a JES3ABEND, JES3SNAP, or SYSABEND DD statement, the printer can contain interspersed output. This can happen when the JES3 task and the ABDUMP task write concurrently to the printer.
3. IBM recommends that a TSO userid should not have the same name as a device JNAME, JUNIT, or DGROUP value. This avoids ambiguity when routing inbound SYSOUT data sets.

The following figure lists all the I/O devices that JES3 supports. For each device type name, the figure shows whether you can specify that device type in the variable field of a DTYPE subparameter.

Table 25. I/O Generic Device Type Names Supported in a JES3 Complex

Generic Device Type (model)	Can this device type name be specified in the variable field of DTYPE=?					
	PRTxxxxx?	PUNxxxx?	RDRxxxx?	RMTxxxx?	TAxxxxx?	Notes:
1403	Yes	No	No	Yes	No	
2250(3)	No	No	No	No	No	
2265	No	No	No	No	No	
2305(2)	No	No	No	No	No	
2501	No	No	Yes	No	No	
2540(1,2)	No	Yes	Yes	Yes	No	
2671	No	No	No	No	No	
2740	No	No	No	No	No	
2955	No	No	No	No	No	
3060	No	No	No	No	No	
3180(1)	No	No	No	No	No	Specify as the 3278 that is being emulated.

Table 25. I/O Generic Device Type Names Supported in a JES3 Complex (continued)

Generic Device Type (model)	Can this device type name be specified in the variable field of DTYPE=?					
	PRTxxxxx?	**PUNxxxx?**	**RDRxxxx?**	**RMTxxxx?**	**TAxxxxx?**	**Notes:**
3203	Yes	No	No	Yes	No	
3211	Yes	No	No	Yes	No	
3277(1,2)	No	No	No	No	No	
3278 (2,2A,3,4,5)	No	No	No	No	No	
3279(2,2A,2B, 2C,3A,3B)	No	No	No	No	No	
3284(1,2)	No	No	No	No	No	
3286(1,2)	No	No	No	No	No	
3288(2)	No	No	No	No	No	
3289(1,2)	No	No	No	No	No	
3330	No	No	No	No	No	
3330-1	No	No	No	No	No	
3330V	No	No	No	No	No	
3340	No	No	No	No	No	
3350	No	No	No	No	No	
3375	No	No	No	No	No	
3380	No	No	No	No	No	
3390	No	No	No	No	No	
3400 (2,3,4,5, 6,7,8,9)	No	No	No	No	See Note	Specify 73400 for 7-track, 93400 for 9-track and 34009 for 3480 compatibility mode.
3422	No	No	No	No	See Note	Supported as 3400 Tape.
3429	No	No	No	No	See Note	Specify TA93429.
3430	No	No	No	No	See Note	Supported as 3400 Tape.
3480	No	No	No	No	See Note	Specify TA03480 or TA03480X. TA03480X defines an IBM 3480 tape subsystem with compaction.
3490	No	No	No	No	See Note	Specify TA33490.
3505	No	No	Yes	No	No	
3525	No	Yes, Note 1	Yes, Note 2	No	No	1. Specify 3525I for a 3525 with the two-line print feature. Specify 3525M for a 3525 with the multiline print feature. 2. 3525 is valid for RDRxxxx only if the card reader feature is installed.

Table 25. I/O Generic Device Type Names Supported in a JES3 Complex (continued)

Generic Device Type (model)	Can this device type name be specified in the variable field of DTYPE=?					
	PRTxxxxx?	**PUNxxxx?**	**RDRxxxx?**	**RMTxxxx?**	**TAxxxxx?**	**Notes:**
3590–1	No	No	No	No	See Note	Specify TA435901 on DTYPE
3800 (1,2,3,6,8)	Yes	No	No	No	No	For a 3800 model 3 or 6, specify 38003. For a 3800 model 8, specify 38008. For all other models, specify 3800.
3812	Yes	No	No	No	No	Specify PRTAFP1 on DTYPE
3816	Yes	No	No	No	No	Specify PRTAFP1 on DTYPE
3820	Yes	No	No	No	No	
3825	Yes	No	No	No	No	Specify PRTAFP1 on DTYPE
3827	Yes	No	No	No	No	Specify PRTAFP1 on DTYPE.
3828	Yes	No	No	No	No	Specify PRTAFP1 on DTYPE.
3835	Yes	No	No	No	No	Specify PRTAFP1 on DTYPE.
3880(11)	No	No	No	No	No	For 3880 model 11, specify 3350.
3890	No	No	No	No	No	
3900	Yes	No	No	No	No	Specify PRTAFP1 on DTYPE
4224	Yes	No	No	No	No	Specify PRTAFP1 on DTYPE
4234	Yes	No	No	No	No	Specify PRTAFP1 on DTYPE
4245	Yes	No	No	Yes	No	
4248	Yes	No	No	Yes	No	
5450	No	No	No	No	No	
6870	No	No	No	No	No	
9345	No	No	No	No	No	
any AFP device	Yes	No	No	No	No	Specify PRTAFP1 on DTYPE.

ALTPM=

Specifies that JES3 can schedule data sets with this process mode to this device when an operator uses a command to change the device operating mode from what you originally defined on the MODE parameter of the DEVICE statement. In other words this value is an alternate to that defined on the PM parameter. You can specify 1 to 8 alphanumeric characters for the alternate process mode. You can define a maximum of eight alternate process modes for a device.

A combined total of 255 process modes and alternate process modes can exist in one JES3 complex at one time. For more information about this parameter, see "Defining Process Modes" in *z/OS JES3 Initialization and Tuning Guide*.

If the device is an IBM 3800 model 3 with MODE=FSS specified (or defaulted to) on this statement, the default is LINE. If the printer is anIBM 3800 model 3 with MODE=COMP specified (or defaulted to) on this statement or a line mode printer, the default is (LINE,PAGE). The ALTPM parameter is valid only for the IBM 3800-3, 3800-6, and 3800-8 printers.

BURST=
Specifies whether or not you want burst (trailer) pages printed or punched. You can specify this parameter with printer and punch devices only. If you specify the SELECT parameter, JES3 ignores the BURST parameter.

YES
Indicates that you want this device to print or punch burst pages at the end of each job.

NO
Indicates that you do not want this device to print or punch burst pages.

M Specifies that you want JES3 to mark the edges of the burst page or mark three blank pages following a job's output for ease of separation. You can modify the mark forms specification after initialization using a *CALL, *START, or *RESTART,WTR command. See *z/OS JES3 Commands* for information about these commands.

If you specify an invalid subparameter, JES3 uses the parameter default.

CARRIAGE=
Specifies the carriage tape or forms control buffer (FCB) associated with this device. You can specify this parameter for printers only.

NO
Specifies that the carriage tape or FCB on this printer cannot be changed during writer execution.

YES
Specifies that the carriage tape or FCB (3211, 3203, or 3800 only) can be changed during writer execution as required.

STANDARD
Specifies the standard carriage tape that you define on the OUTSERV initialization statement.

carrtape
Specifies the name (1 to 8 characters) of the carriage tape that is initially mounted on the printer or the name (1 to 4 characters) of the FCB that is to be initially loaded on the printer. If the device is a 3211, 3203, or 3800 printer, a module must be included in SYS1.IMAGELIB, having the name FCB2xxxx or FCB3xxxx, where xxxx is the 1- to 4-character name of the forms control buffer.

If you specify an invalid subparameter, JES3 uses the parameter default.

Note: If you are using the user exit IATUX23 and you are coding FCBs for use with JES3 defined printers that are other than 3800, then you must code a CHANNEL 12 in the FCB.

CB=
Specifies when you want JES3 to clear the device's buffer. You can specify this parameter for the IBM 3800, IBM 4245, and IBM 4248 printers only.

D Specifies that you want the data set option used. This causes output service to clear the buffer at the end of each data set and pause shortly at the end of each data set.

J Specifies that you want the job option used. This causes output service to clear the buffer at the end of each job and pause shortly at the end of each job.

N Specifies that you do not want the device's buffer cleared unless required by a function. Maximum performance is obtained with CB=N. Examples of functions that require a clear printer command are:
- loading new characters
- requesting operator setup
- waiting for work

When the device is in manual mode (M specified on *X, *R, or *S and M is specified in message IAT8562), a clear printer command is issued (to clear the buffer) before each data set and CB has no effect.

If you specify an invalid subparameter, JES3 uses the parameter default.

CHARS=
Specifies the image(s) to be set up on printers that support character sets (for example: 3800, 3816, 3820) and whether or not the images are allowed to be changed. For specific printer information, see the documents provided with your printer.

YES
Allows changing of images.

NO
Does not allow changing of images.

STANDARD
Specifies that the name of the image to be set up is defined on the OUTSERV initialization statement.

id1
Specifies a 1- to 4-character name of an image to be set up. You can specify up to four names.

If you do not specify the CHARS parameter for remote devices, the default is NO.

If you specify an invalid subparameter, JES3 uses the parameter default.

For information about determining which output parameter values apply during printing, see *z/OS JES3 Initialization and Tuning Guide*.

CHNSIZE=
Specifies the size of the RU chain to be transmitted to this SNA work station.

DS
Specifies that the entire data set is to be sent as a single chain.

nnn
Specifies the number of pages that the chain is to contain. Control

characters in the data (skip to channel 1 for printers or eject for punches) delimit the page size. The value for nnn can be any number from 1-255.

(nnn,mmm)
Specifies the number of pages (nnn) in the chain and the number of logical records (mmm) in each page. This form of the subparameter allows you to transmit, as a multiple chain, a data set that contains no control characters.

The value for nnn and for mmm can be any number from 1-255.

Notes:

1. If CHNSIZE=DS is specified no output checkpoints will be taken.
2. If you specify nnn or (nnn,mmm), JES3 takes an output checkpoint before each chain is transmitted.
3. CHNSIZE specified on a //*FORMAT statement overrides this CHNSIZE specification. CHNSIZE specified on this statement overrides CHNSIZE specified on a DEVICE statement.
4. CHNSIZE=DS gives the best performance, but error conditions detected can not result in a restart from the last checkpoint since checkpoints are not taken.

CKPNT=
Specifies that a checkpoint is to be taken after the specified number of records. The number specified must be between 100 and 32767.

JES3 uses a default value of 200 for punch devices. For a printer, the following chart shows the default for each printer type.

Table 26. Changing the FSSNAME Parameter during a Hot Start with Refresh

Printer Type	Default
3800	CKPNT=10000
3211	CKPNT=2000
Other Line Mode Printers	CKPNT=1000
FSS-Supported Printers	Invalid

Note: If you specify an invalid subparameter, JES3 uses the parameter default.

CKPNTPG=
Specifies that a checkpoint is to be taken after the specified number of pages. The number specified must be between 1 and 32,767, inclusive. If this parameter is specified for any printer other than one operating in FSS mode (such as a 3800 model 3), the parameter is ignored. If the 3800 model 3 is running in compatibility mode, the checkpoint value is taken from the CKPNT parameter. You can modify this checkpoint parameter after initialization using the CK parameter on a *CALL, *START, or *RESTART,WTR command. For information about using JES3 commands, see *z/OS JES3 Commands*.

If neither this parameter nor the CKPNTSEC parameter is coded, the default is CKPNTPG=200. If you specify an invalid subparameter, JES3 uses the parameter default.

Note: Do not code the CKPNTPG and CKPNTSEC parameters on the same DEVICE statement; they are mutually exclusive.

CKPNTSEC=
Specifies that a checkpoint is to be taken after the specified number of seconds. The number specified must be between 1 and 32,767, inclusive. If this

parameter is specified for any printer other than one operating in FSS mode, the parameter is ignored. If the printer is running in compatibility mode, the checkpoint value is taken from the CKPNT parameter. You can modify this checkpoint parameter after initialization using the CK parameter on a *CALL, *START, or *RESTART,WTR command. For information about using JES3 commands, see *z/OS JES3 Commands*.

If neither this parameter nor the CKPNTPG parameter is coded, the default is CKPNTPG=200.

If you specify an invalid subparameter, JES3 uses the parameter default.

Note: Do not code the CKPNTPG and CKPNTSEC parameters on the same DEVICE statement; they are mutually exclusive.

COPYMARK=
Specifies that you want vertical separator lines printed on the edges of output. If this parameter is specified for any printer other than one operating in FSS mode, the parameter is ignored. If the printer is running in compatibility (COMP) mode, a vertical separator line will still be sent on a job and dataset basis if you also specify HEADER=YES on this statement. These separator lines help identify the beginning and end of each job or data set in a stack of output. A change in the thickness of the copy mark indicates the beginning of a new job, data set, or multiple copies of a data set.

You can modify this COPYMARK= parameter after initialization using the CM parameter on a *CALL, *START, or *RESTART, WTR command. For information about using JES3 commands, see *z/OS JES3 Commands*.

N Specifies that you do not want to use copy marks. Although JES3 continues to print a vertical line on the edges of output from IBM 3800 printers, the thickness does not vary.

J Specifies that you want copy marks printed on a job basis. A change in the thickness of the copy mark indicates the beginning of a new job.

C Specifies that you want copy marks printed on a data set copy basis. For multiple copies of a data set, JES3 increments the thickness of the copy mark after each copy.

DGROUP=
Specifies the 1 to 8 alphameric-character name used to combine devices by physical location. When input is received from a device in a particular DGROUP, JES3 makes an attempt to send the associated output to the same DGROUP location. This parameter is ignored when defining remote devices.

DGRPONLY=
Specifies which data sets can be scheduled to this device when destination checking is in effect (WS=D). Specifying DGRPONLY=YES limits the use of this device to only those data sets that are destined for this device group. DGRPONLY=NO specifies that this device can also process data sets that are destined for any local device.

This parameter can be useful when defining SNA-attached AFP printers. For example, JES3 considers IBM 3827 printers to be local devices, even though they may be placed at distant locations. Specifying DGRPONLY=YES for these devices prevents data sets destined for any local device from being printed at remote locations.

You can use the `*MODIFY,W` command to dynamically change the device group scheduling criteria. However, you must restart any jobs in the output service

hold queue when you dynamically change this value. See *z/OS JES3 Commands* for a description of the `*MODIFY,W` command.

DTYPE=
Specified for a JES3 device to indicate the device type. This parameter must precede the JUNIT and SELECT parameters on a DEVICE statement. See the previous device type table for the device type names that can be specified in the variable fields (xxxx) of the subparameters.

PRTxxxxx
Identifies a locally-attached printer. Specify PRTAFP1 for AFP1 printers. An AFP1 printer can be either channel attached or non-channel attached.

PUNxxxx
Identifies a locally-attached punch.

RDRxxxx
Identifies a locally-attached reader.

RMTxxxx
Identifies a remote terminal (described by an RJPTERM or RJPWS statement). For SNA RJP printers, specify RMTPRINT. For SNA RJP punches, specify RMTPUNCH.

TAxxxxx
Identifies a tape device.

username
Indicates a device type which is associated with a user DSP.

DYNAMIC=
Specifies whether or not you want this device started dynamically when there is work available to print, punch, or to be sent to a remote printer or punch.

NO
Specifies that you can only start this device by calling a hot writer using the JES3 *CALL,WTR command.

NO,+
Specifies that the writer is to remain active indefinitely even when no output is available for processing.

YES
Specifies that the writer is to stop automatically when no more output is available for processing.

YES,0
Specifies that the writer is to stop automatically when no more output is available for processing.

YES,*timeout*
Specifies that the writer is to stop automatically after the specified period of time, *timeout* if there is not more output to process.

timeout
The *timeout* parameter controls the writer when it is stopped. This value can be specified in either minutes, hours, or days. A (+) sign specifies that the writer is to remain active indefinitely. A (0) specifies that the writer is to stop when no more output is available for processing.

nnnM
Specifies a non-zero timeout interval in minutes (up to 999 minutes)

nnnH
Specifies a non-zero timeout interval in hours (up to 999 hours)

nnnD
Specifies non-zero timeout interval in days (up to 999 days)

0 Specifies that the writer is to stop when no more output is available for processing.

+ Specifies that the writer is to remain active until an operator stops it using a JES3 *CANCEL command.

You can change the value of this parameter during system operation using the `*MODIFY,W` command. For information about using JES3 commands, see *z/OS JES3 Commands*. If you omit this parameter, JES3 uses a value of YES for all devices except those that run under the control of an output writer FSS. For FSS devices, JES3 uses a value of NO.

If you specify an invalid subparameter, JES3 uses the parameter default.

FEATURES=
Specifies the features of a 3800 printer.

CGS2
Specifies that the additional character generation storage feature is installed on the printer.

SS Specifies that the burster-trimmer-stacker is attached.

FLASH=
Specifies the forms overlay frame associated with this device. You can specify this parameter for an IBM 3800 printer only.

YES
Indicates that forms flashing is allowed to change.

NO
Indicates that forms flashing must not change.

STANDARD
Indicates that the corresponding ID in the OUTSERV initialization statement will be used in the mounting of the forms overlay frame.

name
Indicates that the 4-character name specified will be used in the mounting of the forms overlay frame.

If you specify an invalid subparameter, JES3 uses the parameter default.

FORMS=
Specified for printer and punch devices only. This parameter describes the forms associated with this device.

YES
Indicates that the forms on this printer or punch can be changed during writer execution as required.

NO
Indicates that the forms on this printer or punch cannot be changed during writer execution.

STANDARD
Indicates the standard forms defined on the OUTSERV initialization statement are to be used.

forms
Indicates the name (1 to 8 characters) of the forms that are initially mounted on this printer.

If you specify the name of the initial forms, you must first explicitly specify either YES or NO.

If you specify an invalid subparameter, JES3 uses the parameter default.

FSSNAME=
Specifies the installation-defined name of the functional subsystem (FSS) under which an AFP printer will operate. The name must match the name of an output writer FSS defined on a FSSDEF initialization statement. If you omit this parameter, the value specified for the JNAME parameter on this DEVICE statement is used.

If you specify an invalid subparameter, JES3 uses the parameter default.

Note: During a hot start with refresh, changing the FSSNAME parameter requires knowing the state of the FSS associated with the original FSSNAME parameter and the state of the FSS associated with the new FSSNAME parameter. Table 27 shows the conditions when you can consider changing the FSSNAME parameter whether it is the original or new FSSNAME.

Table 27. Changing the FSSNAME Parameter during a Hot Start with Refresh

FSS Active	FSS Inactive	FSS on Global	Global IPLed prior to hot start with refresh	Can FSSNAME parameter be changed?
Yes	–	Yes	Yes	Yes
Yes	–	Yes	No	No
Yes	–	No	–	No
–	Yes	–	–	Yes

HEADER=
Specified for printer and punch devices only.

NO
Indicates that this printer or punch is not to print or punch block header pages for a job or its data sets.

YES
Indicates that this printer or punch is to print or punch block header pages for each job and each data set. If the device is a 3800 model 3 printer running in compatibility (COMP) mode, a copymark is also sent along with the header pages.

Note: If you specify the SELECT parameter, JES3 ignores the HEADER parameter.

If you specify an invalid subparameter, JES3 uses the parameter default.

JNAME=
Specifies the 1- to 8-character name of a JES3 device. The first character of

the name cannot be a slash (/). This name should be unique to the device and must not be the same as used for the DGROUP parameter name. JNAME is used by the operator to refer to a JES3 device. For RJP devices, the JNAME must include (1) the work station name, which is assigned by the user, and must be exactly 5 characters in length, (2) followed by PRn for a printer, PUn for a punch, and RDn for a reader. The 'n' can be any number from and including X'1' to X'F'. When the NUMDEV parameter is used, JNAME specifies a 1–4 character prefix. See the NUMDEV= keyword on page 87 for how the actual JNAMEs for a range of devices is determined.

JUNIT=

Specifies:

- The number of the device on that main or NONE if the device does not attach to that main
- The name of a main to which the device is attached
- Routing information for messages about the device
- Whether the device is initially on-line or off-line, or not identified to the system during MVS initialization.

You must code the following group of subparameters for each main to which the device is attached:

/devnum or devnum or NONE

Specifies the device number (by 3-digit or 4-digit hexadecimal number). A slash (/) preceding the device number is not required. Device numbers can be specified by any of the following formats:

```
ddd
dddd
/ddd
/dddd
```

ddd and dddd represent the device numbers. This must be the address to which the device is attached on the processor named ***main***. Specify NONE if the device is not attached to that main. If a device is not channel-attached (for example, the 3820 or 3816 printer), do not code /devnum or devnum; instead, use a comma as a position holder. For remote devices, you can specify either NONE or use a comma as a position holder.

main

Specifies a processor which can use this device as a JES3 global device when that main is global. This name must be the same name as that defined in the NAME parameter on a MAINPROC initialization statement. The device must be attached to this main at the address specified by ***/devnum or devnum***.

Alternatively, a main name of *ALL can be used. Using *ALL indicates that all processors in the complex are eligible to use this device as a JES3 global device when the processor is the global. When *ALL is used, no other group of *devnum,main,msgdest,OFF|ON* can be used on the JUNIT parameter of this DEVICE initialization statement, and the values specified for *devnum,main,msgdest,OFF|ON* are the same for all mains.

msgdest

Specifies the routing information for messages concerning this device. If you are defining this device to run under the control of an output

writer FSS, do not specify the MLG or ALL destination classes for this parameter. If you specify one of these classes, the routing information defaults to routing code 42 which is the route code equivalent of JES3 Destination Class **JES**.

This value may be specified as a JES3 destination class or as an MVS routing code. If a routing code is used, nnn specifies a decimal number from 1 through 28, or 41 through 128. Routing codes 29 through 40 are reserved for IBM's use and will be ignored if specified.

OFF
Specifies that the initial JES3 status of this device (as a JES3 device) is offline to JES3. For an assignable device, JES3 also varies the device offline to MVS unless it is online as an execution unit.

ON
Specifies that the initial JES3 vary status of this device (as a JES3 device) is online to JES3. For an assignable device, JES3 also varies the device online to MVS.

Note: For the 3820 printer, specifying JUNIT=(/devnum or devnum... is not valid. Instead, you must use a comma as a place-holder when specifying the JUNIT parameter. This parameter cannot precede the DTYPE parameter.

LDENS=
Specifies whether or not the set line density command is to be sent with the set vertical format (SVF) record to the work station. If the SVF=NO parameter is specified, this parameter is ignored.

YES
Specifies that the set line density command is to be sent with the SVF record. The work station printer will print the number of lines per inch specified in the FCB image in SYS1.IMAGELIB. The number of lines will be either 6 or 8 per inch.

NO
Specifies that the set line density command is not to be sent with the SVF record. The work station printer will print 6 lines per inch.

Note: Before specifying LDENS=YES, consult the software component description for the receiving unit to determine whether or not the software supports the set line density command. If the software does not support this command and the command is sent, the results are unpredictable.

LINELIM=
Specifies line limits for printer or punch devices only. The LINELIM parameter is associated with the WS=L parameter on the *CALL,WTR, *START, or *RESTART operator commands or the DEVICE or OUTSERV initialization statement.) The number specified must be between 0 and 2,147,483,647, inclusive.

nnnnnnnnnn
Indicates that a data set must have this number of output lines or less to be selected for output processing.

nnnnnnnnnn+
Indicates that a data set must have this number of output lines or more to be selected for output processing.

MODE=
Specifies the mode of an FSS-controlled device.

COMP
Specifies that JES3 is to consider the printer as a line mode printer compatible with other 3800 printers. JES3 creates an FSS table entry for the printer but the printer runs under the control of a writer DSP in the JES3 global address space. This parameter is only valid for an IBM 3800 model 3 printer.

FSS
Specifies that JES3 is to consider the printer as one that runs under the control of an output writer FSS in its own address space.

For guidelines on choosing a value for this parameter, see "Running a Page Mode Printer" in *z/OS JES3 Initialization and Tuning Guide*.

If you specify the FSSNAME parameter on this statement, the default value for the MODE parameter is FSS. Otherwise, the default value is COMP.

If you specify an invalid subparameter, JES3 uses the parameter default.

Note: If the device is an IBM 3820 or an AFP1 printer, JES3 assumes MODE=FSS, whether explicitly coded or not.

MODIFY=
Specified for the 3800 printer only. This parameter specifies the name of the copy modification module to be used as the table reference character for this device.

YES
Specifies that copy modification module changes can be made.

NO
Specifies that copy modification module changes cannot be made.

STANDARD
Specifies that the copy modification module to be used is defined by the OUTSERV initialization statement.

name
Specifies the 1- to 4-character name of the copy modification module.

0-3
Specifies the table reference character to be used with the copy modification module.

If you specify an invalid subparameter, JES3 uses the parameter default.

NPRO=
Specifies the non-process run-out interval for a channel-attached AFP printer running in FSS mode. If you later modify the NPRO interval using an operator command, JES3 retains the change across a hot start.

nnnn
Specifies the number of seconds the printer will wait for more data before forcing out the already-printed pages. The value specified must be between 0 and 9999, inclusive.

STANDARD
Specifies that the run-out interval will be taken from the NPRO parameter on the OUTSERV statement.

NO
Specifies that the run-out interval is not to be used for this printer.

If you specify an invalid subparameter, JES3 uses the parameter default.

NUMDEV=
Specifies the number of devices to be defined by this DEVICE statement, starting with the specified JUNIT or XUNIT. For example,

- If a DEVICE statement defines

  ```
  XUNIT=(3A0,main,md,ON),NUMDEV=32
  ```

  32 devices will be defined with XUNITs of `3A0` through `3BF` on the specified main.
- If DEVICE statement defined

  ```
  JNAME=TAPE,JUNIT=(FFF,main,md,ON),NUMDEV=3
  ```

  three JNAMES of TAPE0FFF, TAPE1000, and TAPE1001 are defined with correpsonding JUNITs of `FFF`, `1000`, and `1001` on the specified main.

The NUMDEV parameter requires at least one JUNIT or XUNIT with a device number. For example, NUMDEV is not valid on a DTYPE=SYSMAIN or a VTAM-attached FSS printer.

Notes:

1. Referenced JNAME

   If the device is a JES3 global device, the JNAME parameter specifies a prefix rather than a complete JNAME. A four digit device number is built based on the JUNIT and NUMDEV and concatenated with the prefix to form a complete JNAME. For example, if the `JUNIT=3A0`, the specified JNAME is TAPE, and NUMDEV=32, the statement will define 32 JNAMEs of TAPE03A0 through TAPE03BF. Because of converting JNAME this way, omitting NUMDEV for JES3 global devices is not the same as specifying NUMDEV=1.

   If the JUNIT combines mains with different device numbers, for example, `JUNIT=(3A0,SY1,,ON,9C0,SY2,,ON)`, the first specification is used to build the JNAMEs (`3A0` in this case).

   If the JUNIT combines mains with device numbers and NONE, for example, `JUNIT=(NONE,SY1,,ON,9C0,SY2,,ON)`, the first group with an actual device number is used to build the JNAMEs (`9C0` in this case).

   Since the JUNIT part of the JNAME is padded with 0's if it is a three digit device, be careful to use the correct JNAME if you reference a JNAME on any other initialization statement (for example, FSSDEF or SYSOUT).
2. Duplicate XUNIT

   If the use of the NUMDEV parameter causes a range of devices to generate duplicate definitions, the device that appears earlier in the initialization stream prevails and the duplicate part of the range is ignored with a warning message, but any part of the range that is not duplicate also prevails. For example, if DEVICE statement 1 defines XUNIT=205 and DEVICE statement 2 later defines XUNIT=200,NUMDEV=8, the XUNIT=204 from device statement 1

prevails and XUNIT=204 from DEVICE statement 2 is ignored with a warning message, but DEVICE statement 2 successfully defines 200 through 203 and 205 through 207. If, however, these statements were reversed, the entire NUMDEV range would prevail and XUNIT=204 would be ignored with a warning message.

3. Duplicate JUNIT versus XUNIT

   In determining duplicates, JES3 also considers a definition duplicated if one DEVICE statement defines a device number as a JUNIT and another DEVICE statement defines the same device number as an XUNIT. In the preceding example, if DEVICE statement 1 specifies JUNIT=204 instead of XUNIT=204 this would still be considered a duplicate, even if DEVICE statement 2 specifies an XUNIT range that includes 204 but no JUNIT.

4. Duplicate JNAME

   It is also possible for the use of the NUMDEV parameter to cause duplicate JNAMEs to be generated. In the case of duplicate JNAMEs, the same rule holds: the earlier definition prevails but any part of the range that is not duplicate also prevails.

OPACTLOG=
Specifies whether or not operator command actions are to be logged in the output of this device. If the parameter is not specified, JES3 will log the messages only if both, the header and trailer pages are specified on the device. The default is 'YES'.

YES
Specifies that operator command actions will be logged in the output of this device using message IAT7066 or IAT7067. This parameter is only valid for FSS devices.

NO
Specifies that operator command actions will not be logged in the output. This parameter is only valid for FSS devices.

PAGELIM=
Specifies page limits for output processing on an AFP printer. The PAGELIM parameter is associated with the WS=L parameter on the *CALL,WTR *START, or *RESTART operator commands or the DEVICE or OUTSERV initialization statement.

nnnnnn
Indicates that a data set must have this number of output pages or less to be selected for output processing on a 3820 or 3800 model 3 printer. The value specified must be an integer between 0 and 999999, inclusive.

Note: If you specify line and page limits (L) in the work selection (WS) list and set (or accept the default of) PAGELIM=0 here, JES3 will not be able to select page-mode data sets for this device.

nnnnnn+
Indicates that a data set must have this number of output pages or more to be selected for output processing on the AFP printer. The value specified must be an integer between 0 and 999999, inclusive.

If you specify an invalid subparameter, JES3 uses the parameter default.

PDEFAULT=

Specifies a subset (CHARS and FCB) of the JES3 default values that you can specify that are **not** applied when controlling output processed by FSS-supported printers. If JES3 default values are not used, the FSS procedure's PRINTDEV values are applied to the output during FSS processing. These default characteristics only apply to jobs that have not specifically requested values in their JCL.

CHARS

Indicates that JES3 will not supply default CHARS and UCS to the FSS for output that does not specifically request a CHARS or UCS value.

FCB

Indicates that JES3 will not supply default FCB or carriage tape to the FSS for output that does not specifically request an FCB or carriage tape value.

NONE

Indicates that the FSS will use all the JES3 default characteristics.

If you specify an invalid subparameter, JES3 uses the parameter default.

PDIR=

Specifies at what point(s) a peripheral data set information record (PDIR) is to be sent with a job.

ALL

Specifies that a PDIR is to precede every data set in a job.

BDS

Specifies that a PDIR is to be sent at the beginning of the job, when JES3 sends the begin destination select (BDS) command. If you specify this parameter but the setup characteristics or copy count change between data sets, JES3 sends a PDIR between those data sets.

PM=

Specifies that data sets with this process mode may be scheduled to this device when the device is in the operating mode that is specified on the MODE parameter. The process mode is 1 to 8 alphanumeric characters. A maximum of eight process modes may be defined for a particular device. You can modify a data set's process mode after initialization using the MODIFY,U,Q=WTR command. For information about using JES3 commands, see *z/OS JES3 Commands* . For more information about this parameter, see "Defining Process Modes" in *z/OS JES3 Initialization and Tuning Guide* .

JES3 uses the following defaults for this parameter:

- LINE for all line mode printers.
- (LINE,PAGE) for all printers that must run under control of an output writer FSS or a 3800 model 3 printer that you are running in FSS mode (MODE=FSS on the DEVICE statement).
- LINE for a 3800 model 3 printer that you are running in compatibility mode (MODE=COMP on the DEVICE statement).

If you specify an invalid subparameter, JES3 uses the parameter default.

RDFEAT=

Indicates whether the 3525 card punch has the card read feature.

Y indicates that the 3525 has the card read feature.

N indicates that the 3525 does not have the card read feature.

Note: If you use this parameter, code it after coding the DTYPE parameter.

RECORDS=
Specified for printer or punch devices only.

nnn
Indicates the number of records (from 1 to 255) be read from the spool data set at one time by JES3 output service. The record referred to is a JES3 spool record whose size is specified by the BUFSIZE parameter of the BUFFER initialization statement.

If a RECORDS parameter is specified on more than one DEVICE initialization statement, JES3 selects the largest value to determine the number of records JES3 writes to spool sequentially.

JES3 uses the following default values.

- For a 3800, RECORDS=n, where
  `n=(16K + (BUFSIZE/4))/BUFSIZE`
- For a 3211, RECORDS=2.
- For all other devices, RECORDS=1.

SELECT=
Specifies that this statement defines a basic exchange device or an exchange device. The device must be attached to the SNA work station that is named in the first five characters of the JNAME parameter. The last three characters of the JNAME parameter must specify a printer. If you code the SELECT parameter, code it after coding the DTYPE parameter.

BEn
A basic exchange device is attached to the work station. Valid values for n are 1 to 9.

EXn
An exchange device is attached to the work station. Valid values for n are 1 to 9.

LEN=
Specifies the record length to be used for the exchange or basic exchange device.

For basic exchange devices, the valid range is 1 to 128 and the LEN= subparameter is required.

For exchange devices, the valid range is 1 to 255 and the default value is 132.

EDS=
For data sets on the device's diskette, specifies whether JES3 is to separate data sets with unlike print requirements (this means unlike carriage control characters, forms control buffers, or forms).

Note: If the SELECT parameter is specified, the HEADER and BURST parameters on this statement are ignored and no header, or burst is used.

When specifying the SELECT=BEn parameter for two devices, the SELECT parameter can be the same on the two DEVICE statements for those devices. However, the LEN parameters cannot be the same because

unpredictable results can occur: For example, the following is the correct way to indicate this in the initialization stream:

```
DEVICE,DTYPE=RMTPRINT,JNAME=WS000PR1,SELECT=BE2,LEN=1
DEVICE,DTYPE=RMTPRINT,JNAME=WS000PR1,SELECT=BE2,LEN=2
```

When SELECT=EXn is specified, you cannot define more exchange devices than there are physical disks available to support them.

If you specify the EDS parameter for a device that is not a SNA RJP device or for a device that uses Peripheral Data Set Information Record (PDIR) support, JES3 ignores the parameter.

SETUPMSG=
Specifies that the installation wants to suppress writer setup message IAT7030 for FSS-supported devices. This is determined based on the characteristics of the device.

YES
Indicates that the writer setup action message is displayed for the specified device. This is the default.

NO
Indicates the writer setup action message is not displayed for the specified device.

This keyword applies only to FSS-supported devices. If it is specified for a non-FSS-supported device, warning message IAT3243 is issued and the keyword is ignored.

STACKER=
Specified for 3800 printer only. This parameter describes the output stacking of the device. If the SS subparameter of the FEATURES parameter is not specified, STACKER=(NO,C) is forced.

YES
Indicates that changing of output stacking is permitted.

NO
Indicates that changing of output stacking is not permitted.

STANDARD
Specifies that stacking is to be as specified on the OUTSERV initialization statement.

S Specifies that output is to be placed in the sheet stacker, where offset stacking is performed.

C Specifies that output is to be placed in the continuous forms stacker.

If you specify an invalid subparameter, JES3 uses the parameter default.

SVF=
Specifies that the set vertical format record (FCB load) is not to be sent to this work station. If the device is defined as basic exchange, the set vertical format record is not sent even if SVF=NO is omitted. For all other SNARJP work stations, omitting SVF=NO causes SNARJP to send an SVF record to the workstation NO is the only valid SVF value; any other value will be ignored and the device is defined as if the parameter was omitted.

TRAIN=

Specified for printer devices or the 3525/3525M/3525I punch with print feature only.

YES

Indicates that the initial print train or print band on this device can be changed during writer execution as required. JES3 does not provide UCS buffer loading to remote printers. However, the user may change trains or bands on a remote printer but must provide the UCS buffer loader as applicable to the type of work station.

NO

Indicates that the print train or print band on this printer cannot be changed during writer execution.

STANDARD

Indicates that the print train or print band specified on the OUTSERV initialization statement will be used. Do not specify STANDARD if TRAIN=ANY is specified on the OUTSERV initialization statement.

train

Indicates the name of the print train or print band that is mounted on this device at JES3 initialization. This field can be any valid name as specified in SYS1.IMAGELIB.

If a user-created print train or band image is specified in this subparameter and XLATE=YES is specified on the same DEVICE statement, the user-created print train or band image must be included in SYS1.IMAGELIB and the user must supply a translate table member named IATWxx in SYS1.JES3LIB. The variable xx is the name of the print train or print band as specified in the TRAIN parameter of this statement or of the OUTSERV statement.

Note: If you do not specify the TRAIN parameter for remote devices, the default is NO.

If you specify an invalid subparameter, JES3 uses the parameter default.

WC=

(c,...)

Specifies writer classes. This parameter indicates SYSOUT classes in the order they are processed by the output service writers for this device. Data sets for a class not specified will not be selected. The value of c specifies a valid SYSOUT class (A-Z, 0-9) that appears as a SYSOUT parameter on a DD statement. If a list of classes is specified, separate each class by a comma.

STANDARD

Specifies that the values on the WC parameter of the OUTSERV initialization statement will be assumed.

If you specify an invalid subparameter, JES3 uses the parameter default.

WS=

(c,...) D,T,F,C,U,FL,CM,SS,CL,L,P,PM

Specifies the writer selection criteria. The value of c indicates the items JES3 output service checks, in order of importance, when selecting a data set for output processing on this device. (These WS parameter values remain in effect over a hot start.)

Specify the selections in order of importance and separate specifications with a comma.

Selection Character	Meaning
C	Carriage tape or FCB
CL	SYSOUT class
CM	Copy modification
D	Data set destination
F	Forms requested
FL	Flash
L	Limit scheduling (line, page or record)
SS	Stacker
P	Data set priority
PM	Processing mode
T	Specific device type requested
U	Train image UCS

For additional information about the influence of JCL parameters on the settings for WS=, see Appendix A, "Work Selection for JES3" on page 219.

STANDARD
Specifies that the values on the WS parameter of the OUTSERV initialization statement will be assumed.

If you specify an invalid subparameter, JES3 uses the parameter default.

Attention: JES3 does not take any action (such as issue mount messages or load FCB and UCS) if you omit printer and punch setup characteristics on this parameter. For example, a job that requires special forms may print on the wrong form if you omit forms as a selection criterion.

Note: If you specify (or accept the default of) PAGELIM=0 and specify L in the WS list here, JES3 will not be able to select page-mode data sets for this device.

XLATE=
Specified for printer or punch devices only, to indicate whether or not JES3 translates unprintable characters in output lines into blanks.

YES
Indicates that you want JES3 to translate unprintable characters into blanks.

NO
Indicates that you do not want JES3 to translate unprintable characters into blanks.

When defining IBM 3211, IBM 4245, or IBM 4248 devices, JES3 uses a default value of XLATE=NO if you omit the XLATE parameter or specify an invalid subparameter. These device types do not require JES3 translation since the translation of unprintable characters is performed by the device itself. Specifying XLATE=YES for these devices can cause unnecessary device setup processing, which can interrupt the flow of data to the device.

XTYPE=
Specifies the characteristics of the JES3-managed or jointly managed device

as it is used by jobs in execution. It must precede the XUNIT parameter, which is required if XTYPE is specified.

name
Specifies a 1- to 8-character name that defines a device that can be referenced. It should match the name specified in the XTYPE parameter on a SETNAME initialization statement.

CA
Specifies that the device is cartridge tape.

TA
Specifies that the device is reel tape.

GR
Specifies that the device is graphic.

DA
Specifies that the device is direct access.

UR
Specifies that the device is unit record.

RM
Specifies that the device will contain removable volumes whose mounting is to be controlled by MDS.

PR
Specifies that the device will contain MVS permanently resident volumes.

Note: Devices within a specific XTYPE should have compatible characteristics. For a SNA-attached AFP printer, XTYPE is not a valid parameter.

XUNIT=
Specifies the characteristics of a device attached to one or more mains. If a device is shared between two or more mains, all four subparameters are specified for each main to which the device is attached. If a device is shared between channels of the same main, the SYSGEN primary address should be the only subparameter indicated.

/devnum or devnum
Specifies the device number (by 3-digit or 4-digit hexadecimal number) of the device attached to the main. A slash (/) preceding the device number is not required. Device numbers can be specified by any of the following formats:

```
ddd
dddd
/ddd
/dddd
```

ddd and dddd represent the device numbers.

main
Specifies the processor to which the device is attached. This name must be the same as that defined in the NAME parameter on the MAINPROC initialization statement.

Alternatively, a main name of *ALL can be used. Using *ALL indicates that the device is attached to all processors in the complex. When *ALL is used, no other group of *devnum,main,msgdest,OFF|ON* can be used

on the XUNIT parameter of this DEVICE initialization statement, and the values specified for *devnum,main,msgdest,OFF | ON* are the same for all mains.

msgdest
Specifies the routing information for all JES3 and MVS device-related messages concerning this device. If you do not specify any routing information, the SETUP parameter on the STANDARDS statement determines the default value that JES3 uses:

- If you specify SETUP=NONE, JES3 uses routing code 97 which is the routing code equivalent of destination class S1.
- If you specify any other value for SETUP or omit SETUP, JES3 uses the value specified for the MDSLOG parameter on the SETPARAM statement.

This value may be specified as a JES3 destination class or as an MVS routing code. If a routing code is used, specify a decimal number from 1 through 28, or 41 through 128. Routing codes 29 through 40 are reserved for IBM's use and will be ignored if specified.

ON | OFF
ON and OFF specify whether the device is to be online or offline (as an execution device) to JES3 and to MVS when it is initialized. Specifying OFF does not affect the MVS online or offline status of devices defined to MVS as permanently resident.

Note: The XTYPE parameter must precede the XUNIT parameter if you specify both. Do not specify the XUNIT parameter for a SNA-attached AFP printer.

Examples

Example 1: In the following example, a JES3 3211 printer, PR2, is defined on the global processor, SY2.

```
DEVICE,DTYPE=PRT3211,JNAME=PR2,JUNIT=(004,SY2),XTYPE=(PRT,UR),
XUNIT=(004,SY2,,OFF)
```

Example 2: In the following examples, both 1403 and 3211 printers are defined when the SY2 processor is eligible to be the global processor.

```
DEVICE,DTYPE=PRT1403,JNAME=PR1,JUNIT=(00E,SY1,UR,,10E,SY2,UR),
XTYPE=(PRT,UR),XUNIT=(00E,SY1,,OFF,10E,SY2,,OFF)

DEVICE,DTYPE=PRT3211,JNAME=PR2,
JUNIT=(004,SY1,UR,ON,104,SY2,UR,OFF),
XTYPE=(PRT,UR),XUNIT=(004,SY1,,OFF,104,SY2,,OFF)
```

Example 3: In the following example, a 3211 printer, PR3, is defined in a special device group. It may also be used by jobs in execution on SY1.

```
DEVICE,DTYPE=PRT3211,DGROUP=UPSTAIRS,JNAME=PR3,
JUNIT=(00F,SY1,D1,ON),XTYPE=(PRNTR,UR),XUNIT=(00F,SY1,S10,OFF)
```

Example 4: In the following example, a 9-track tape is shared between a global processor, SY1, and a local processor. It is initially offline to JES3 and to the SY2 local processor. The console message class for JES3 on the global processor is S7, for the global processor it is S9, and for the SY2 local processor it is S6. The default group name (DGROUP) of LOCAL is assumed.

```
DEVICE,DTYPE=TA92400,JNAME=T90,JUNIT=(180,SY1,S7,OFF),
XTYPE=(TAPE9,TA),XUNIT=(180,SY1,S9,,280,SY2,S6,OFF)
```

Example 5: In the following example, a direct-access device is shared between two processors SY1 and SY2. It is to be available for volume mounting required by jobs (RM specified in the XTYPE parameter).

```
DEVICE,XTYPE=(DISK,DA,RM),XUNIT=(130,SY1,S4,,230,SY2,S5)
```

Example 6: In the following example, a channel attached AFP printer is defined as shared among 3 processors, SY1 through SY3. The printer is initially offline to all 3 processors. The printer will run in FSS mode under the control of an output writer FSS named WTRFSS1.

```
DEVICE,DTYPE=PRTAFP1,JNAME=PRT803,
JUNIT=(803,SY1,S1,OFF,803,SY2,S2,OFF,803,SY3,S3,OFF),
XTYPE=(AFP1,UR),
XUNIT=(803,SY1,S1,OFF,803,SY2,S2,OFF,803,SY3,S3,OFF),HEADER=NO,
CHARS=(YES,STANDARD),FLASH=(YES,STANDARD),STACKER=(YES,STANDARD),
BURST=(YES),FSSNAME=WTRFSS1,MODE=FSS,PM=PAGE,PAGELIM=3+,LINELIM=0+,
NPRO=150
```

Example 7: In the following example, a SNA-attached AFP printer is connected through VTAM to SY1. The printer must run in FSS mode (which is explicitly coded) and is under the control of an output writer FSS named WTRFSS2. Both *page* and *line* mode data can be routed to this device.

```
DEVICE DTYPE=PRTAFP1,JNAME=PRTABC1,JUNIT=(,SY1,S1,OFF),MODE=FSS,
WS=(D),DGROUP=TESTGRP,PM=(LINE,PAGE),FSSNAME=WTRFSS2
```

Example 8: In the following example, five SNA-attached AFP printers are defined as shared among 3 processors, SY1 through SY3. The printers have the JES3 names PRT0803, PRT0804, PRT0805, PRT0806, and PRT0807. The printers will be defined as initially offline to all three processors. The printers will run in FSS mode under the control of an output writer FSS, named WTRFSS1.

```
DEVICE,DTYPE=PRTAFP1,JNAME=PRT,
JUNIT=(803,SY1,S1,OFF,803,SY2,S2,OFF,803,SY3,S3,OFF),
XTYPE=(AFP1,UR),
XUNIT=(803,SY1,S1,OFF,803,SY2,S2,OFF,803,SY3,S3,OFF),HEADER=NO,
CHARS=(YES,STANDARD),FLASH=(YES,STANDARD),STACKER=(YES,STANDARD),
BURST=(YES,FSSNAME=WTRFSS1,MODE=FSS,PM=PAGE,PAGELIM=3+,LINELIM=0+,
NPRO=150,NUMDEV=5
```

Example 9: This is example 8 simplified. The message destination is the same for all processors.

```
DEVICE,DTYPE=PRTAFP1,JNAME=PRT,
JUNIT=(803,*ALL,S1,OFF),
XTYPE=(AFP1,UR),
XUNIT=(803,*ALL,S1,OFF),HEADER=NO,
CHARS=(YES,STANDARD),FLASH=(YES,STANDARD),STACKER=(YES,STANDARD),
BURST=(YES),FSSNAME=WTRFSS1,MODE=FSS,PM=PAGE,PAGELIM=3+,LINELIM=0+,
NPRO=150,NUMDEV=5
```

Example 10: In the following example, 300 9–track tapes are shared between a global processor, SY1, and a local processor. Thay are initially offline to JES3 and to the SY2 local processor. The console message class for JES3 on the global processor is S7, for the global processor it is S9, and for the SY2 local processor it is S6. The default group name (DGROUP) of LOCAL is assumed. The JNAMEs for the tapes are T900180 through T9002AB.

```
DEVICE,DTYPE=TA92400,JNAME=T90,JUNIT=(180,*ALL,S7,OFF),
XTYPE=(TAPE9,TA),XUNIT=(180,*ALL,S9,OFF),NUMDEV=300
```

Example 11: In the following example, 300 9–track tapes are shared between SY1 and SY2 and can be used as JES3 global devices when SY1 is global. They are

initially offline to JES3 and to all processors. The console message class for JES3 on the global processor is S7, and for all processors it is S9. The default group name (DGROUP) of LOCAL is assumed. The JNAMEs for the tapes are T900180 through T9002AB.

```
DEVICE,DTYPE=TA92400,JNAME=T90,JUNIT=(180,SY1,S7,OFF),
XTYPE=(TAPE9,TA),XUNIT=(180,SY1,S9,,280,SY2,S6,OFF),NUMDEV=300
```

Example 12: In the following example, 4715 direct-access devices are shared between all processors in the complex. They take device numbers from 130 through 139A. They are permanently resident.

```
DEVICE,XTYPE=(DISK,DA,PR),XUNIT=(130,*ALL,S4,ON),NUMDEV=4715
```

DYNALDSN (Dynamically Allocated Data Set Integrity)

Use the DYNALDSN statement to specify which data sets on permanently resident or reserved DASD volumes require data set integrity protection when the data set is dynamically allocated.

Statement Summary

Table 28. DYNALDSN Summary

Required/Optional Statement	Optional
Statement Default	`DYNALDSN,PROTECT=(*)`
Placement in Initialization Stream	This statement must follow the ENDJSAM statement.
Coding Considerations	Two special characters (? and *) can be used in the dsn subparameter: ***** Indicates that the remainder of the data set name to the right of the asterisk is ignored. All data set names that match up to the * are protected or bypassed as specified. **?** Indicates that the remainder of the current qualifier to the right of the question mark is ignored. Qualifiers are separated by a period (.), by the beginning of a data set name, or by the end of the data set name. For example, in the data set name ABC.D.EFGH, the qualifiers are 'ABC', 'D', and 'EFGH'.
Security Usage	None
Performance Considerations	None
Initialization Stream Overrides	None
Restart or Command Modification	Cold, warm, or hot start with refresh for all parameters.

Syntax

```
►►──DYNALDSN──┬──,PROTECT=──┬─(──*──)──────────────┬──┬──────────────────────────────►◄
              │             │                      │  │
              │             └─(──dsn──┬──────┬──)──┘  │
              │                       └─,dsn─┘         │
              │                                        │
              └──,BYPASS=──(──dsn──┬──────┬──)──────────┘
                                   └─,dsn─┘
```

Parameters

PROTECT=
Specifies that you want full MDS data set integrity protection for the named data sets.

BYPASS=
Specifies that you do not want data set integrity protection for the named data sets.

Examples

(1) If ABC.D.EFGH is specified in the PROTECT or BYPASS parameter, the matching dsn must be ABC.D.EFGH.

(2) If AB* is specified, the matching dsn must be any data set whose name begins with AB.

(3) If A?.D.EFGH is specified, the matching dsn must be a data set name with 3 qualifiers. The name must begin with A. The second qualifier must be D and the third qualifier must be EFGH.

(4) If ?.?.? is specified, then any data set name with three qualifiers is a matching dsn.

(5) If * is specified, then any data set name is a match.

```
DYNALDSN,BYPASS=(?.?.LIST)
DYNALDSN,PROTECT=(JOES.*,SAMS.*)
DYNALDSN,BYPASS=(?.?.LOAD,?.?.ASSEMBLE)
DYNALDSN,PROTECT=(*)
```

This example causes integrity protection to be bypassed for all data sets (a) which have exactly three qualifiers and whose third qualifier is ‘LIST’ or (b) whose third qualifier is ‘LOAD’ or ‘ASSEMBLE’, except when the first qualifier is ‘JOES’ or ‘SAMS’. Integrity protection is provided for all other data sets.

DYNALLOC (Dynamically Allocate Data Sets and Devices)

Use the DYNALLOC statement to specify a data set or a device that you want dynamically allocated to JES3 during initialization. The DYNALLOC statement allows you to allocate a data set or device without changing the JES3 cataloged procedure.

Note: Converter/Interpreter functional subsystems (C/I FSS) and the PROCLIB update function will obtain unit and volume information for the procedure

libraries from the catalog. For these functions, JES3 ignores unit and volume information that you specify in the JES3 start-up procedure or on a DYNALLOC initialization statement.

Statement Summary

Table 29. DYNALLOC Summary

Required/Optional Statement	Optional
Statement Default	None
Placement in Initialization Stream	DYNALLOC statements, if used, must be placed first in the JES3 initialization stream.
Coding Considerations	1. The DYNALLOC statement must begin in column 1; it ***cannot*** be continued, nor can comments be embedded. 2. All parameters pertaining to a DYNALLOC statement must be defined on one statement; continuation statements are not permitted. 3. The maximum number of DYNALLOC initialization statements is 1635 minus the number of DD statements in the JES3 start procedure. 4. If a dynamically allocated data set or device is inaccessible to a main in the JES3 complex, operator intervention will be required during JES3 initialization. 5. You cannot dynamically allocate dummy data sets or data sets defined by the ddnames: • CHKPNT • JES3IN • STEPLIB 6. The JES3 global processor will dynamically allocate all of the DD's specified on the DYNALLOC statement. Only a subset of the DD's specified on DYNALLOC statement will be dynamically allocated by the JES3 local processors. The following is a list of the DD's that will be dynamically allocated if they appear on a DYNALLOC statement: • DD's for spool data sets • JES3JCT • JES3OUT • JESABEND • SYSABEND • SYSUDUMP The following DD's will not be dynamically allocated by the local processors if they appear on a DYNALLOC statement. Note that if a local processor becomes the global processor via a Dynamic System Interchange (DSI), the DD's will be dynamically allocated: • IATPLBxx • JES3DRDS • JES3SNAP • Any user DD's 7. DYNALLOC statements cannot appear in a member specified using the INCLUDE statement.
Security Usage	None
Performance Considerations	None

Table 29. DYNALLOC Summary (continued)

Initialization Stream Overrides	None
Restart or Command Modification	Cold start, warm start, or hot start with refresh for all parameters.

Syntax

```
►►──DYNALLOC──,DDN=ddname──┬──────────────────────────────────────────────►
                           │                (1)   │ │                (2)   │
                           └─,DSN=dsname──────────┘ └─,UNIT=──────────────┬─/devnum──┬─┘
                                                                          ├─devnum───┤
                                                                          └─devtype──┘

►──┬──────────────────────────────────────────────────────────────────────►◄
   │                (3)   │
   └─,VOLSER=serial───────┘
```

Notes:

1 Required for data sets.

2 Required for unit record, graphic, and teleprocessing devices.

3 VOLSER is ignored if the UNIT parameter is not present.

Parameters

DDN=

Specifies the 1- to 8-character ddname associated with this data set or device. Up to 16 input data sets can be concatenated by specifying the same ddname on successive DYNALLOC statements. During the concatenation, JES3 generates temporary ddnames of the form JS3Dxxxx, where xxxx is a 4-digit sequence number. The JS3Dxxxx ddnames cannot be used in the JES3 procedure. If a procedure library data set in a concatenation cannot be found, JES3 removes the data set from the concatenation and issues a message.

Note: You cannot concatenate spool data sets. If your initialization stream contains INCLUDE statements, do not specify DDnames of the form`J3INCLxx` on the DYNALLOC statements. These DDnames are used by JES3 to dynamically allocate the data set and member associated with an INCLUDE statement.

If a required resource (such as a dsname, unit, or volume) is unavailable, JES3 will wait for it to become available. If a required unit is offline, the operator will be asked to bring it online. An unavailable ddname is regarded as an error condition and will produce an error message.

DSN=

Required to specify the 1- to 44-character name of a standard label data set. If all other parameters are included and are specified at their maximum lengths, then the dsname is limited to 17 characters including periods and parentheses. Generation data group sets must use actual version and generation numbers.

UNIT=

Specifies the device number (by 3-digit or 4-digit hexadecimal number) for dynamic device allocation. A slash (/) preceding the device number is required

when specifying a 4-digit device number to distinguish it from a device type. Device numbers can be specified by any of the following formats:

```
ddd
/ddd
/dddd
```

For dynamic data set allocation, specify the 1- to 8-character device type. This parameter is not required for a cataloged data set, but should be included for data sets that are not cataloged.

VOLSER=
Specifies the serial number of the volume that contains the data set. This parameter is not required for a cataloged data set, but should be included for data sets that are not cataloged.

Examples

Example 1: In the following example, a JES3 spool data set, SYS1.SPOOL2, which resides on the 3380 volume SPOOL2, is allocated to JES3:

```
DYNALLOC,DDN=SPOOL2,VOLSER=SPOOL2,UNIT=3380,DSN=SYS1.SPOOL2
```

Example 2: In the following example, an alternate procedure library is defined and two cataloged data sets are concatenated:

```
DYNALLOC,DDN=IATPLB04,DSN=SYS1.PROCLIB
DYNALLOC,DDN=IATPLB04,DSN=SYS2.PROCLIB
```

ENDINISH (End of Initialization Stream)

Use the ENDINISH statement to identify the end of the initialization statements in the initialization stream.

Statement Summary

Table 30. ENDINISH Summary

Required/Optional Statement	Required
Statement Default	None
Placement in Initialization Stream	This statement must follow all other initialization statements.
Coding Considerations	None
Security Usage	None
Performance Considerations	None
Initialization Stream Overrides	None
Restart or Command Modification	Cold start, warm start, or hot start with refresh for all parameters.

Syntax

```
►►──ENDINISH──────────────────────────────────────────────────────────►◄
```

Parameters

None.

ENDJSAM (End of JES3 I/O Statements)

Use the ENDJSAM initialization statement to indicate the end of the JES3 spool initialization statements.

Statement Summary

Table 31. ENDJSAM Summary

Required/Optional Statement	Required
Statement Default	None
Placement in Initialization Stream	1. The ENDJSAM statement must immediately follow the last JES3 spool statement. 2. The spool initialization statements, if used, which must precede the ENDJSAM statement are: BADTRACK, BUFFER, FORMAT, TRACK, OPTIONS, and SPART. 3. Any DYNALLOC statements must precede the spool initialization statements.
Coding Considerations	None
Security Usage	None
Performance Considerations	None
Initialization Stream Overrides	None
Restart or Command Modification	Cold start, warm start, or hot start with refresh for all parameters.

Syntax

```
►►──ENDJSAM──────────────────────────────────────────────────────────►◄
```

Parameters

None.

FORMAT (Format Spool Data Set)

Use the FORMAT statement to specify formatting for a data set residing on a direct-access spool volume during initialization. Specify this statement only when introducing an unformatted volume into a JES3 system or when you change the BUFSIZE parameter on the JES3 BUFFER initialization statement.

Statement Summary

Table 32. FORMAT Summary

Required/Optional Statement	Required
Statement Default	None
Placement in Initialization Stream	The FORMAT statement must precede the ENDJSAM statement.
Coding Considerations	1. The maximum number of FORMAT statements is 1024. 2. After initialization completes, replace FORMAT statements in the initialization stream with TRACK statements otherwise JES3 issues a warning message each time it encounters a FORMAT statement for a formatted spool data set.
Security Usage	None
Performance Considerations	None
Initialization Stream Overrides	None
Restart or Command Modification	Warm start or cold start for the DDNAME and SPART parameters. Cold start only for the STT and STTL parameters. When warm starting JES3, you can replace FORMAT statements with TRACK statements for formatted spool data sets. Use the `*MODIFY,Q,DD=` command to change the SPART parameter.

Syntax

```
►►──FORMAT──,DDNAME=ddname──┬──────────────────────────┬──────────────────────►
                            └─,SPART=partitionname─────┘

►──┬──────────────────────────┬──────────────────────────────────────────────►◄
   ├─,STT=(cylnum,cylnum)─────┤
   └─,STTL=(cylnum,numtrkgps)─┘
```

Parameters

DDNAME=
Specifies the ddname of the DD statement or the ddname on a DYNALLOC statement that defines the spool data set you want formatted. The ddname cannot be JES3JCT.

SPART=
Specifies that the spool data set defined by this statement is a member of the named spool partition. The partition name must match a partition name specified on an SPART statement.

To specify that the data set is a member of the default partition, omit this parameter. If you do not specify at least one spool data set as a member of the default spool partition, JES3 terminates its processing during initialization.

STT=
Specifies the range of cylinders you want allocated to the single track table (STT). This range must be within the extent allocated to the data set. The value

of ***cylnum*** specifies an absolute cylinder number. (Absolute cylinder numbers are device-dependent; the component description for the device describes the numbering scheme.)

The range indicated by ***(cylnum,cylnum)*** can be one cylinder (for example: 24,24) or several cylinders (for example: 24,28) and can be in ascending or descending order. JES3 allocates to the STT only those track groups that fall completely within the indicated range of cylinders. The value for ***cylnum*** cannot be 0.

For fixed head devices, allocate cylinders under the fixed heads for better performance. For other devices, allocate cylinders in the center of the data set.

You should consider spool recovery and I/O balance before specifying the STT or STTL parameter. The presence of a single track table on a spool extent can limit the recovery actions that can be taken for that spool extent. To ensure successful recovery in the event of a problem, you should dedicate a spool extent to the STT or specify the STT on the minimum number of spool extents to achieve your I/O balance requirements.

If you omit either the STT or STTL parameter, or you specify an invalid range, JES3 allocates the centermost 2 track groups of each spool data set in the default partition as the initial STT allocation.

Note: If you change this parameter and want the change to go into effect for existing spool data sets, you must perform a cold start.

STTL=

Specifies the location and number of track groups to allocate to the single track table (STT). These track groups must be within the extent allocated to the data set. The value for ***cylnum*** specifies an absolute cylinder number indicating the beginning cylinder number of the STT allocation in this extent. (Absolute cylinder numbers are device-dependent; the component description for the device describes the numbering scheme.) The value for ***numtrkgps*** specifies the number of track groups to allocate to this extent, beginning with the first track group that is located completely in cylinder ***cylnum***. The maximum number of track groups that may be allocated to the STT is 9999.

For fixed head devices, allocate cylinders under the fixed heads for better performance. For other devices, allocate cylinders in the center of the data set.

You should consider spool recovery and I/O balance before specifying the STT or STTL parameter. The presence of a single track table on a spool extent can limit the recovery actions that can be taken for that spool extent. To ensure successful recovery in the event of a problem, you should dedicate a spool extent to the STT or specify the STT on the minimum number of spool extents to achieve your I/O balance requirements.

If you omit either the STT or STTL parameter, or you specify an invalid range, JES3 allocates the centermost 2 track groups of each spool data set in the default partition as the initial STT allocation.

Note: If you change this parameter and want the change to go into effect for existing spool data sets, you must perform a cold start.

Example

In the following example, the direct-access spool volume defined by the ddname SPOOL1 is formatted and assigned membership in spool partition PART1. Cylinders 30 and 31 are allocated to the STT.

```
FORMAT,DDNAME=SPOOL1,STT=(30,31),SPART=PART1
```

The corresponding DD statement in the JES3 start procedure is:

```
//SPOOL1 DD DSN=JES3.QUES2,DISP=OLD,UNIT=SYSDA,       X
//          VOL=SER=MVSRW1
```

FSSDEF (Functional Subsystem Definition)

Use the FSSDEF statement to define the characteristics of a functional subsystem (FSS) which operates in its own address space. Use a FSSDEF statement for either of the following:

- To define one or more C/I FSSs.
- To define one or more output writer FSSs for printers that you define to run in FSS mode (via the DEVICE initialization statement). You can define more than one printer to run under the control of a single output writer FSS. If you do not define an output writer FSS for each printer that requires one, JES3 creates an FSS using default values.

For guidelines on how to choose values for the FSSDEF statement parameters, see "Configuring C/I Processing" in *z/OS JES3 Initialization and Tuning Guide* and C/I FSSs and "Defining an Output Writer FSS" in *z/OS JES3 Initialization and Tuning Guide*.

Statement Summary

Table 33. FSSDEF Summary

Required/Optional Statement	Optional

Statement Default	None. However, JES3 used the following default if no FSSDEF statement exists when MODE=FSS is specified on a DEVICE statement for an FSS-supported printer:
	`FSSDEF,TYPE=WTR,FSSNAME=(see note1),`
	`SYSTEM=(see note2),`
	`PNAME=(see note3),MSGDEST=42,TERM=NO`
	Notes:
	1. JES3 uses the name specified on the FSSNAME parameter of the DEVICE statement (if it is coded) or uses the JNAME defined for the device (if the FSSNAME parameter on the DEVICE statement is omitted). If the DEVICE statement specifies the NUMDEV parameter, the JNAME defined for the DEVICE is the JNAME prefix specified on the DEVICE statement combined with the JUNIT determined from the device range, left padded with a zero to a four digit device if the device contains three digits.
	2. See the parameter description to determine the default value used for the SYSTEM parameter.
	3. See the parameter description to determine the default value used for the PNAME parameter.
	4. The default for MSGDEST (routing code 42) is equivalent to JES3 Dest Class JES.

Placement in Initialization Stream	This statement can be placed in any order following the ENDJSAM statement.
Coding Considerations	None

Table 33. FSSDEF Summary (continued)

Security Usage	None
Performance Considerations	None
Initialization Stream Overrides	None
Restart or Command Modification	• Cold, Warm or Hot Start with Refresh all parameters. • The following must be considered when a hot start with refresh is going to be performed: 1. You cannot delete an FSSDEF statement for an FSS if the FSS is active. The exception is if the FSS is active on the global and the global was IPLed prior to performing the hot start with refresh. 2. If you make changes to an FSSDEF statement for an FSS that is active, JES3 ignores the changes and uses the checkpointed information from when the FSS was started. The exception is if the FSS is active on the global processor and the global was IPLed prior to performing the hot start with refresh, then your change takes place. 3. The SYSTEM parameter has a dependency on the NAME parameter of the MAINPROC statement. During a hot start with refresh, JES3 does not process the MAINPROC statements, but uses the MAINPROC's from the last warm or cold start. If you add a MAINPROC statement during a hot start with refresh, JES3 ignores it and issues error messages if the SYSTEM parameter of the FSSDEF statement references the MAINPROC statement that you attempted to add during a hot start with refresh. • If a writer FSS for a non-VTAM attached printer is not already defined by a DEVICE statement in the initialization stream, you cannot add an FSSDEF statement for the FSS writer. • Use the `*MODIFY,F` command to change the DSPCNT, MAXASST, START, TERM, SYSTEM, and PNAME parameters. • Use the `*MODIFY,CONFIG` command to add FSS definitions for non-channel attached FSS managed printers. • Use the `*MODIFY,T` or `*MODIFY,W...` commands to dynamically modify FSS writers. • Use FSSDEF with TERM=YES option after an orderly shutdown of JES3. This will incorporate the changes you make in the DYNALLOC, HWSNAME, CIPARM, RESDSN, and SYSOUT initialization statements. Restarting JES3 will establish the new changes.

Syntax

```
                  ┌─,TYPE=WTR─┐
►►──FSSDEF──┬──────────────┴──,FSSNAME=fssname──┬──────────────────────────────┬──►
            └─,TYPE=CI──┘                       │                              │
                                                └─,MSGDEST=──┬─42──────────┬──┘
                                                             ├─msgdest─────┤
                                                             ├─JES─────────┤
                                                             └─nnn─────────┘
```

```
►──┬──────────────────────┬──┬──────────────────────────────┬──┬──────────────────┬──►
   └─,PNAME=procname──────┘  └─,SYSTEM=──┬─sysname──────────┬┘  └─,TERM=──┬─NO──┬┘
                                         └┤ System Names ├┘             └─YES─┘

►─┤ Valid Only for C/I FSSs ├──────────────────────────────────────────────────►◄
```

Valid Only for C/I FSSs:

```
├──┬──────────────────────┬──┬──────────────────────────────────────────────►
   └─,START=──┬─YES─┬──┘  └─,DSPCNT=──┬─(2,1)──────────────────────────┬┘
              └─NO──┘                 ├─maxbatch───────────────────────┤
                                      └─(──┬─────────┬──┬──────────────┬──)─┘
                                           └─maxbatch─┘  └─,maxdemsel─┘

►──┬──────────────────────┬──────────────────────────────────────────────────┤
   └─,MAXASST=──┬─0────────┬──┘
                └─nnnnnnnn─┘
```

System Names:

```
├──(──sysname1,sysname2──┬──────────────────────────┬──────────────────────────┤
                         │                          ▼                          │
                         └──────────────────────────┘                          │
                         └─,sysnamex,sysnamey──────┘                           )
```

Parameters

TYPE=
Specifies the type of FSS you are defining.

WTR
Specifies that an output writer FSS is being defined.

CI Specifies that a JES3 converter/interpreter (C/I) FSS is being defined. If SMS is active on the global, JES3 will not start a local C/I FSS unless SMS is also active on the main where the FSS is defined.

FSSNAME=
Specifies the installation-defined name of the FSS. The first character of the name must be an alphabetic character; the remaining characters must be alphameric or national characters. The name may be 1 to 8 characters. To define more than one device to run under an output writer FSS, specify this name on the FSSNAME parameter of each printer's DEVICE initialization statement.

MSGDEST=
Specifies the routing information for messages concerning this output writer FSS. This value may be specified as a JES3 destination class or as an MVS routing code.

If a routing code is used, nnn specifies a decimal number from 1 through 28, or 41 through 128. Routing codes 29 through 40 are reserved for IBM's use and will be ignored if specified.

The default of routing code 42 is the routing code equivalent of JES3 Dest Class JES.

This parameter also applies to messages that originate from a CI/FSS address space, unless the installation instructs JES3 not to override the destination class for CI/FSS messages. See the CIFSS=MSGROUTE parameter on the CONSTD statement for more information. Do not specify ALL or MLG as values for this parameter. You can modify this value during system operation using the `*MODIFY,F,FSS=` command; however, any changes to this value do not take effect until the next time the FSS is started.

If you specify an invalid subparameter, JES3 uses the parameter default.

PNAME=
Specifies a member of the procedure library for started task jobs, which contains a cataloged procedure for starting the FSS. The member must be in the procedure library defined by the STCPROC parameter of the STANDARDS statement, or in procedure library IATPLBST, if the STCPROC parameter is omitted.

Parameter default: For a C/I FSS, the default member name is JES3CI. For an output writer FSS, see *Print Services Facility/MVS System Programmer's Guide* for the default member names of the start-up procedures for PSF/MVS driven printers.

SYSTEM=
Specifies the JES3 main on which the FSS is to operate. The name(s) must be the same as specified on the NAME parameter of the MAINPROC statement for the main.

If you specify pairs of mains (the (sysname1,sysname2) form), the first main name specifies a potential global. The second main name specifies the main on which the FSS is to operate when the first main is actually the global. If a dynamic system interchange (DSI) occurs, the FSS will be relocated according to the specifications of this parameter the next time the FSS is started. If the actual global is not the main specified by the first main name in any pair, the FSS is not eligible to run.

For example, suppose this parameter specifies SYSTEM=(SY1,SY2,SY2,SY3). When JES3 or the operator starts the FSS, the global is SY1 and JES3 establishes the FSS address space on SY2. Later, a DSI takes place and SY2 becomes the global. The FSS address space continues running on SY2 until, for whatever reason, the FSS terminates. When JES3 or the operator restarts the FSS, JES3 establishes the FSS address space on SY3.

You must specify either a single system name or the system names must be paired. Otherwise, the default value(s) will be used. You may specify up to 8 pairs of system names.

Parameter default:

For a C/I FSS, the default value is the name of the global.

For an output writer FSS, JES3 finds the first printer defined in the initialization stream which is assigned to this FSS. If that printer is defined as attached to only one main, that main is the default. If the printer is defined as attached to more than one main including the global, the global is the default. Otherwise, the default is the main specified on the first MAINPROC statement in the initialization stream to which the printer is defined as attached.

TERM=
Specifies whether or not the FSS terminates if the JES3 global terminates as the result of an *RETURN or *DUMP operator command.

If you specify an invalid subparameter, JES3 uses the parameter default.

Note: If you specify TERM=YES, and bring JES3 down during a minimal spool condition, the FSS address space termination will not take effect. You should therefore exercise care when restarting JES3 during a minimal spool condition.

START=
Specifies whether or not JES3 should start the FSS automatically when the main on which the FSS is to run is connected to the global. This parameter applies only to C/I FSSs. If specified for an output writer FSS, this parameter is ignored.

If you specify an invalid subparameter, JES3 uses the parameter default.

Note: If a C/I FSS terminates for reasons other than the reason identified by the TERM= parameter (that is, terminating JES3 because of a *RETURN or *DUMP command), JES3 changes the START= setting for that C/I FSS to `START=NO`. `START=NO` indicates that if JES3 is subsequently hot started, the FSS is not automatically started. In this way, JES3 protects itself from restarting a C/I FSS that previously terminated for reasons beyond JES3's control. You need to issue the `*F F FSS=fssname,ST=Y` command to start the FSS again.

DSPCNT=
Specifies the maximum number of CI DSPs that can operate in the C/I FSS address space at any time. The first subparameter (***maxbatch***) specifies the maximum number of CI DSPs that process batch jobs. The second subparameter (***maxdemsel***) specifies the maximum number of CI DSPs that process demand select jobs (that is, started tasks and TSO LOGONs).

The sum of the two subparameters cannot exceed 256. CI DSPs defined to process batch jobs cannot be used to process demand select jobs, and vice versa. This parameter applies only to C/I FSSs. If specified for an output writer FSS, this parameter is ignored.

If you specify an invalid subparameter, JES3 uses the parameter default.

MAXASST=
Specifies the maximum number of JCL statements that can be processed concurrently by all CI DSPs in the C/I FSS address space. The value must be an integer between 0 and 99999999, inclusive. A value of 0 means no JCL statement limit applies; JES3 does not check how many JCL statements are being processed. For guidelines on choosing a value for this parameter, see *z/OS JES3 Initialization and Tuning Guide*.

This parameter applies only to C/I FSSs. If specified for an output writer FSS, this parameter is ignored.

If you specify an invalid subparameter, JES3 uses the parameter default.

Examples

Example 1: The following example defines a C/I FSS named CIFSS1 that runs on processor SY3 when processor SY1 is the JES3 global processor. The maximum number of batch CI DSPs that can operate in the C/I FSS address space at any one time is 4, while the maximum number of demand select CI DSPs is 5. The C/I FSS will not be started automatically by JES3, nor will it terminate if JES3 terminates as the result of an *RETURN or *DUMP command.

```
FSSDEF,TYPE=CI,FSSNAME=CIFSS1,SYSTEM=(SY1,SY3),
DSPCNT=(4,5),START=NO,TERM=NO
```

Example 2: The following example defines an output writer FSS named WTRFSS1 that runs on processor SY1. The procedure in the procedure library for starting the output writer FSS has a member name of WTR3800. The output writer FSS will terminate if JES3 terminates as the result of an *RETURN or *DUMP command.

```
FSSDEF,TYPE=WTR,FSSNAME=WTRFSS1,SYSTEM=SY1,PNAME=WTR3800,
TERM=YES
```

Example 3: The following example defines three AFP channel-attached printers that operate under the control of the same output writer FSS (FSSPRT2). The DYNAMIC=YES specification on the PRTAFP3 allows JES3 to dynamically start that printer.

The output writer FSS runs on processor SY1. Messages concerning this FSS will be displayed at consoles defined to receive routing code 42 which is the routing code equivalent of message destination class JES. The procedure in the procedure library for starting the output writer FSS has a member name of MULTIPRT. If you enter an *RETURN or *DUMP command, the output writer FSS terminates with JES3.

Consoles defined to receive routing code 97 (the routing code equivalent of message destination class S1) display messages that JES3 issues on behalf of printers PRT701, PRT801 and PRT901. Only a JES3 *CALL, *START, or *RESTART,WTR operator command can start these printers.

```
FSSDEF,TYPE=WTR,FSSNAME=FSSPRT2,MSGDEST=JES,
PNAME=MULTIPRT,SYSTEM=SY1,TERM=YES

DEVICE,DTYPE=PRTAFP1,JNAME=PRT701,MODE=FSS,
FSSNAME=FSSPRT2,JUNIT=(,SY1,S1,ON)

DEVICE,DTYPE=PRTAFP1,JNAME=PRT801,MODE=FSS,
FSSNAME=FSSPRT2,JUNIT=(,SY1,S1,ON)

DEVICE,DTYPE=PRTAFP1,JNAME=PRT901,MODE=FSS,
FSSNAME=FSSPRT2,JUNIT=(901,SY1,S1,ON),
XUNIT=(901,SY1,S1,ON),XTYPE=(PRTAFP1,UR),
DYNAMIC=YES
```

Example 4: The following example defines three channel-attached AFP1 printers called PRT0509, PRT050A, and PRT050B that operate under the the control of the same output writer FSS (FSSPRT3).

```
FSSDEF,TYPE=WTR,FSSNAME=FSSPRT3,MSGDEST=JES,
PNAME=MULTIPRT,TERM=YES DEVICE,DTYPE=PRTAFP1,JNAME=PRT,MODE=FSS,
FSSNAME=FSSPRT3,JUNIT=(509,*ALL,S1,ON),
XUNIT=(509,*ALL,S1,ON),XTYPE=(PRTAFP1,UR),
DYNAMIC=YES,NUMDEV=3
```

Example 5: The following example defines 3 channel-attached AFP1 printers called PRT0609, PRT060A, and PRT060B that each operate under the control of their own output writer FSS address spaces (also called PRT0609, PRT060A, and PRT060B).

```
DEVICE,DTYPE=PRTAFP1,JNAME=PRT,MODE=FSS,
JUNIT=(609,*ALL,S1,ON),
XUNIT=(609,*ALL,S1,ON),XTYPE=(PRTAFP1,UR),
DYNAMIC=YES,NUMDEV=3
```

GROUP (Job-Class Group Definition)

Use the GROUP initialization statement to define the characteristics of a JES3 job-class group and whether the initiators managed by this group are WLM managed or JES3 managed. A GROUP statement must define each job class group (except for the default group, JS3BATCH) named on a CLASS initialization statement.

Statement Summary

Table 34. GROUP Summary

Required/Optional Statement	Optional

Statement Default	`GROUP, NAME=JS3BATCH,MODE=JES,`
	`BAR=16,JSPAN=ALL,`
	`EXRESC=(*ALL,2,,DEMAND,DEMAND)`

Placement in Initialization Stream	This statement must follow the ENDJSAM statement.
Coding Considerations	• You can define a maximum of 255 groups. • When specifying EXRESC with MODE=WLM, the initiator count option, the intiator allcoation option, and the initiator unallocation option are stored but ignored by JES3. • BAR, which specifies a job priority barrier is stored but ignored by JES3 when MODE=WLM. • JSPAN, as specified is stored, but ignored by JES3 when MODE=WLM. • When the initial MODE=WLM setting is changed to MODE=JES, the stored values for EXRESC, BAR, and JSPAN will be used. This allows the installation to define a group as WLM managed for testing purposes, but still keep the initiator related information in case a swith to JES mode is required. • You can define a group using the GROUP initialization without specifying any job classes.
Security Usage	None
Performance Considerations	None
Initialization Stream Overrides	None

Table 34. GROUP Summary (continued)

Restart or Command Modification (Part 1 of 2)	Cold start, warm start, or hot start with refresh for all parameters. The following should be considered when performing a hot start with refresh: • Do not delete a GROUP statement or delete a EXRESC from a GROUP statement that has active initiators unless you IPL the processor(s) where the initiators are running prior to the hot start with refresh. • Device fences that were active prior to the hot start with refresh will be reallocated unless the definition of the device fence in the EXRESC or DEVPOOL parameters was changed. If the device fence definitions was changed, the fence will be reallocated after JES3 initialization completes. • Initiator options (initiator count, allocation option, and unallocation option) are ignored if you specify MODE=WLM on the GROUP statement. If you switch from WLM mode to JES mode using the `*MODIFY,G` command, the initiator options specified on the GROUP statement will then be in effect.
Restart or Command Modification (Part 2 of 2)	JES3 failures may occur after JES3 is initialized if a GROUP is deleted and jobs reference this GROUP. Use the `*MODIFY,G` command to change: • The on/off status of a group • The initiator counts, allocation option, and unallocation option of the EXRESC parameters. • The BAR and JSPAN parameters. • The MODE parameter.

Syntax

```
►►──GROUP──,NAME=groupname──┬──────────────────────┬──┤ EXRESC ├──────────────────►
                            └──,MODE=──┬─JES─┬──┘
                                       └─WLM─┘

►──┬──────────────────────┬──┬──────────┬──┬──────────┬──┬──────────────────────┬──►◄
   └──,BAR=──┬─16───┬──┘  └──,DEF=YES──┘  └─┤ DEVPOOL ├─┘  └──,JSPAN=──┬─ALL────┬──┘
             ├─PRTY─┤                                      └─nnnnn──┘
             └─nn───┘
```

EXRESC:

```
                                                  (1)
├──,EXRESC=──(──┬─procname──┬──,initcnt──,storsize──────┤ exopts ├──)──────────────┤
                └─*ALL──────┘
```

DEVPOOL:

```
├──,DEVPOOL=──(──devopt,devname,devcount──,──┤ devnum ├──┤ options ├──────────────┤
```

options:

```
┌──────────────────────────┐
├──┬──────────────────────┬┴──┤ devnum ├──────────────────────────────────┤
   └─,devname,devcount────┘
```

devnum:

```
├──┬──────────┬──,devcount──────────────────────────────────────────────┤
   ├─/devnum──┤
   └─devnum───┘
```

exopts:

```
                                 (1)
├──,alopt──,unalopt──,storopt──────,devopt,devname,devcount──────────────┤
```

Notes:

1 The positional subparameters storsize and storopt are no longer supported. They have been retained so that initialization streams will not have to be changed.

Parameters

NAME=

Specifies the 1- to 8-character name of a job class group. A job class is assigned to this job-class group by placing this group name on its CLASS statement. The NAME parameter must be the first parameter on the GROUP statement. The first character of this name must be alphabetic (MVS restriction).

MODE=

Specifies whether the initiators managed by this group are WLM managed or JES3 managed.

WLM

Specifies that jobs in this job class group are to run under Workload Management initiators, that is, WLM-managed initiators.

JES

Specifies that jobs in this job class group are to run under JES3-managed initiators.

See *z/OS JES3 Initialization and Tuning Guide* for details on WLM-managed and JES3-managed initiators.

EXRESC=

Defines the execution resources, such as initiators, processors, and devices, which you want assigned to this job class group. Jobs in this group use devices assigned to the group to satisfy requests for mountable volumes. An EXRESC parameter must be specified for each main on which this group may be scheduled.

The EXRESC parameter must still be specified even if MODE=WLM, since JES3 still needs to know which system's jobs in this group are allowed to execute. If

a particular system name does not appear in the EXRESC parameter, jobs in that group will not be allowed to run on that system.

***ALL**
Identifies that you want the parameters that your are specifying to apply to all systems in the JESPLEX. By specifying *ALL, instead of listing the individual systems, you make it easier to add a system to your JESPLEX. In this case, you do not have to update your GROUP initialization statements when you add a MAINPROC statement.

procname
Identifies the main associated with the execution resources. The main name must match the NAME parameter on a MAINPROC statement.

If *ALL is specified as the main name, the parameters that you specify are applied to all main processors defined via MAINPROC initialization statements. By specifying *ALL instead of listng the individual systems, you make it easier to add a system to your SYSPLEX. For example, if you add a new MAINPROC statement for system SYXYZ, and you specify *ALL in the EXRESC parameters of your GROUP statements, the new system will automatically be included in each of the group definitions.

You cannot specify *ALL and then list specific system names, and vice versa.

initcnt
The initcnt value indicates the dedicated initiator count. This subparameter defines the number of initiators you want assigned exclusively to this group. When scheduling jobs from this group, only the dedicated initiators will be used; therefore, this count defines the maximum number of jobs of this group that can be concurrently scheduled to the specified main. Dedicated initiators that become idle will not be used for scheduling any other job class group. The value of initcnt must be less than the value of the MAXUSER parameter in the IEASYSxx member of SYS1.PARMLIB that will be used for the IPL. The MAXUSER parameter is discussed in *z/OS MVS Initialization and Tuning Reference*. The initiator identifier is the same as the group name. Each initiator started for MVS processors is identified by the GROUP name. For example, if the dedicated initiator count for GROUP=ABC is 2, then two initiators would be started with identifier ABC. The dedicated initiator count for the default group JS3BATCH is 2. The initnum count parameter on the SELECT initialization statement overrides the initcnt parameter. See176 for additional information.

Note: The initiator count is not used when you specify MODE=WLM. If you switch to MODE=JES by using the `*MODIFY,G` command, the value that you specified for the initiator count is used.

storsize
JES3 no longer supports this subparameter. It has been retained so that initialization streams will not have to be changed. If you plan to code any of the following positional subparameters, code a comma (,) to represent this subparameter.

alopt
Determines when the execution resources are to be allocated to the group. Four options are available: DEMAND, DYNAMIC, IPL, or MANUAL.

DEMAND indicates that initiators are to be allocated to satisfy the requirements of selectable jobs in this group up to the number specified by initcnt. DEMAND is the default allocation option.

DYNAMIC indicates that the named execution resources are to be allocated when the first job of this class is eligible for scheduling on a main.

IPL indicates that the execution resources are to be allocated whenever IPL occurs on the main associated with this group. If subsequent reallocation is necessary, it must be done manually.

MANUAL specifies that the execution resources are to be allocated whenever the operator enters the command *F,G,main,G,grp,ON to turn on the group.

The default allocation option is DEMAND. See 176 for additional information.

Note: The initiator allocation option is not used when you specify MODE=WLM on the GROUP initialization statement. If you switch to MODE=JES by using the `*MODIFY,G` command, the value you specified for the initiator allocation option is used.

unalopt

Determines when the execution resources are to be released from the group. Three options are available: DEMAND, DYNAMIC, or MANUAL.

DEMAND indicates that the initiators are to be deallocated when the number of selectable jobs for this group is less than the number of allocated initiators minus the number of initiators that are currently active. DEMAND is the default deallocation option.

DYNAMIC indicates that all execution resources are to be released when no selectable jobs exist for this group.

MANUAL indicates that all execution resources are not to be released until the operator disables the job class group by issuing the `*F,G,main,G,grp,OFF` command. MANUAL is the deallocation option for the default group JS3BATCH.

For all groups except the defaulted groupname JS3BATCH, the default deallocation option is DEMAND. "SELECT (Job Selection Mode)" on page 173 further explains how JS3BATCH becomes the defaulted groupname.

Note: The initiator unallocation option is not used when you specify MODE=WLM. If you switch to MODE=JES by using the `*MODIFY,G` command, the value you specified for the initiator unallocation option is used.

storopt

JES3 no longer supports this subparameter. It has been retained so that initialization streams will not have to be changed. If you plan to code any of the following positional subparameters, code a comma (,) to represent this subparameter.

devopt

Indicates those devices on the specific main (procname) which are dedicated for use by jobs in this group for volume mounting (this is device fencing). This parameter specifies how the devices in this device fence can be allocated. The options are ANY and GROUP.

ANY specifies that jobs are to be able to allocate any devices that are accessible from the main. Note that allocation will attempt to get dedicated (fenced) devices prior to using devices outside the fence.

GROUP indicates that jobs in this group may allocate requests requiring volume mounting only from devices dedicated to the group on the main. This

allows device fencing exclusively because no nondedicated devices are to be used for volume mounting. GROUP is the default device allocation option.

devname,devcount ,devname,devcount
Identifies the device(s) to be dedicated. The subparameters may be repeated, in pairs as is necessary.

devname
Indicates the unit address of the device or the name of the device as specified in the NAMES parameter on the SETNAME statement. The ***devname*** subparameter should have ***devcount*** immediately following it.

devcount
Specifies how many of the indicated devices are to be dedicated; If a device number is specified for ***devname***, the associated ***devcount*** specified must be 1.

/devnum or devnum
Specifies the device number (by 3-digit or 4-digit number). A slash (/) preceding the device number is not required. Device numbers can be specified by any of the following formats:

```
ddd
dddd
/ddd
/dddd
```

ddd and dddd represent the device numbers.

If devices are dedicated to a group on a main using the EXRESC parameter, the DEVPOOL parameter cannot be used. (Specification of dedicated devices in the EXRESC parameter allows device fencing for groups by main.)

BAR=
Specifies a job priority barrier. All jobs in this group that have a priority equal to or above this barrier must be scheduled before any attempt is made to schedule jobs below this barrier.

PRTY
Specifies that each priority level is to be treated as a barrier. Each job in a priority level must be scheduled before any job in any lower priority will be scheduled.

nn Specifies a job priority number from 0 to 15.

16 No barrier is imposed on jobs in this group.

Note: When a value other than 16 is specified, the operator should be informed of its impact. For example, a held job equal to or above the barrier which is ‘awaiting selection of main’ will prevent any job below the barrier from being selected.

If you specify an invalid subparameter, JES3 uses the parameter default.See111 for additional information.

DEF=
Indicates that this is the default group to be assigned to all job classes that have no GROUP parameter on the CLASS statement. Only one GROUP statement should specify the DEF=YES parameter; if you specify DEF=YES on multiple statements, the last such statement in the initialization stream defines the default class.

JS3BATCH is assigned as the default group with MODE=JES if DEF=YES is not specified on any GROUP statement in an initialization stream.

DEVPOOL=
Specifies that a pool of devices is to be dedicated to jobs in this group for volume mounting on all mains for which this group may be enabled. If the DEVPOOL parameter is specified, devices may not be dedicated in the EXRESC parameter.

The POOLNAMS parameter on the SETNAME statement, with appropriate XTYPE definitions on the DEVICE statement, may be used to define unique sets of devices with the shareability (physical attachment) desired for this group.

Note: Device fences apply to all jobs in a group whether or not the jobs are started tasks or batch jobs.

devopt
Specifies how JES3 is to allocate devices to jobs in this group.

ANY
Indicates that jobs in this group can use nondedicated devices as well as dedicated devices. JES3 always tries to allocate dedicated devices first. The default is ANY.

GROUP
Indicates that only devices dedicated to this group can be used for volume mounting.

devname
Indicates the unit address of the device or the name of the device as specified in the NAMES parameter on the SETNAME statement. The ***devname*** subparameter should have ***devcount*** immediately following it.

devcount
Specifies how many of the indicated devices are to be dedicated; if a device number is specified for ***devname***, the associated ***devcount*** specified must be 1.

/devnum or devnum
Specifies the device number (by 3-digit or 4-digit number). A slash (/) preceding the device number is not required. Device numbers can be specified by any of the following formats:

```
ddd
dddd
/ddd
/dddd
```

ddd and dddd represent the device numbers.

JSPAN=
Specifies the number of jobs in this group to be examined in selecting a job to be scheduled.

nnnnn
Indicates a decimal number from 1 to 65534.

ALL
Indicates that all the jobs in the group are to be examined.

See 176 for additional information.

Examples

Example 1: The following example shows how to dedicate three initiators to a job class group, ABC, on a dynamic basis (whenever jobs of that class exist in the system) on local main SY1.

```
GROUP,NAME=ABC,EXRESC=(SY1,3)
```

Example 2: In the following example, a pool of six TAPES12 devices is fenced for use (in conjunction with nondedicated devices) by jobs in the PROC job class group on local mains SY1 and SY2. Three initiators on both mains are dedicated to this group. (Note that the name TAPES12 defines a group of tape devices accessible from local mains SY1 and SY2.)

```
GROUP,NAME=PROC,EXRESC=(SY1,3),EXRESC=(SY2,3),
DEVPOOL=(,TAPES12,6)
```

Example 3: In the following example a WLM-managed group is defined, but the initiator related options are specified in case the group needs to be eventually switched to JES management.

```
GROUP,NAME=JES3TEST,MODE=WLM,
EXRESC=(SY1,9,,DEMAND,DYNAMIC),
EXRESC=(SY2,10,,DEMAND,MANUAL)
```

Note: An EXRESC parameter must be specified for each system. The EXRESC parameter specifies which systems the group is allowed to have initiators on. If a particular system name does not appear in the EXRESC parameter, jobs in that group will not be allowed to run on that system.

Example 4: In this example, there are three systems in the SYSPLEX and you want group JES3TEST to run only on two of those systems. Since the initiator options are not specified, the default options will be used. The EXRESC parameter is specified as follows:

```
GROUP,NAME=JES3TEST,MODE=WLM,EXRESC=SY1,EXRESC=SY2
```

Example 5: In this example, you want to define an execution resource device fence for a WLM-managed group, and you do not want to define iniitiator options:

```
GROUP,NAME=JES3TEST,MODE=WLM,EXRESC=(SY1,,,,,ANY,3490,...3),...
```

Example 6: In this example, you want to define a JES managed group to all three systems in the SYSPLEX. On each system you want the number of initiators and the initiator allocation and deallocation options to be the same:

```
Hard Way

  GROUP,NAME=JES3TEST,MODE=JES,
  EXRESC=(SY1,9,,DEMAND,DYNAMIC),
  EXRESC=(SY2,9,,DEMAND,DYNAMIC),
  EXRESC=(SY3,9,,DEMAND,DYNAMIC)

Easy Way

  GROUP,NAME=JES3TEST,MODE=JES,
  EXRESC=(*ALL,9,,DEMAND,DYNAMIC),....
```

Example 7: In this example, you want to define a WLM-managed group to all three systems in the SYSPLEX.

```
Hard Way

  GROUP,NAME=JES3TEST,MODE=WLM,
  EXRESC=SY1,
```

```
  EXRESC=SY2,
  EXRESC=SY3

Easy Way

  GROUP,NAME=JES3TEST,MODE=WLM,
  EXRESC=*ALL
```

See the description of the SELECT statement for an example showing how the GROUP statement relates to the SELECT statement.

HWSNAME (High Watermark Setup Names)

Use the HWSNAME statement to:

- Define, to JES3, all names by which users can reference a given device type to enable high watermark setup (HWS) processing.
- Identify the characteristics of each device name for the specific JES3 complex. This statement can be used to define which device names are subsets of other device names. In general, the fewer the number of alternate names, the more restrictive the device name being defined. This ensures that initial allocation for devices that are reused from step to step is the most restrictive device. It also ensures that attempts to override passed or cataloged unit names are processed correctly. Non-HWS users are encouraged to supply HWSNAME information to take advantage of this function.

Statement Summary

Table 35. HWSNAME Summary

Required/Optional Statement	Optional
Statement Default	None
Placement in Initialization Stream	This statement must follow the ENDJSAM statement.
Coding Considerations	1. The device names and alternate names specified on the HWSNAME statement must be defined as JES3 supported-names on the SETNAME initialization statement. Use continuation statements if more alternate names are needed than can be accommodated by one statement. 2. The SETUP parameter on the STANDARDS statement specifies whether or not high watermark setup is to be used. (This statement may be overridden by the //*MAIN JES3 control statement.) 3. Every device name specified on the HWSNAME statement must be specified on the applicable SETNAMES statement(s).
Security Usage	None
Performance Considerations	None
Initialization Stream Overrides	None
Restart or Command Modification	• Cold start, warm start, or hot start with refresh for all parameters. • If you change the HWSNAME statement, you should restart any C/I FSS's that are active. This ensures that the changes are incorporated.

Syntax

```
►►──HWSNAME──,TYPE=──(──devname──┬──────────┬──)──────────────────────────►◄
                                 └──,altnam─┘
```

Parameters

TYPE=
Specifies the name(s) of a device type that is valid for high watermark setup.

devname
Specifies any user-supplied or IBM-supplied group name (1-to-8 characters) associated with the specified unit name(s). The devnam identifies a device type valid for high watermark setup.

altnam
Specifies a list of valid user-supplied or IBM-supplied device names. These are alternate units to be used in device selection. The order of these names is the order in which allocation is attempted; when a device is selected, no search for a later alternate is made.

Special care must be taken when specifying alternate names. The alternate device must be compatible, for MVS allocation purposes, with the device specified by the devname subparameter. Thus, you may not specify a 2314 DASD as an alternate name for a 3330 DASD, and you may not specify 3330 as an alternate name for 2314. Similarly, you may not specify a 2400-series tape drive as an alternate for a 3400-series tape drive. You may, however, specify a 3400-series tape drive as an alternate for a 2400-series tape drive.

The following figure shows which tape drives MVS considers acceptable alternates to a request for a specific tape drive.

Table 36. Tape Drive Device Types Eligible for Allocation

	MVS may allocate a:						
If you request a	**2400**	**2400-3**	**2400-4**	**3400-3**	**3400-4**	**3400-5**	**3400-6**
2400 (800 BPI)	X		X		X		
2400-3 (1600 BPI)		X	X	X	X		X
2400-4 (800/1600 BPI)			X		X		
3400-3 (1600 BPI)				X	X		X
3400-4 (800/1600 BPI)					X		
3400-5 (6250 BPI)						X	X
3400-6 (1600/6250 BPI)							X

Table 36. Tape Drive Device Types Eligible for Allocation (continued)

	MVS may allocate a:						
If you request a	**2400**	**2400-3**	**2400-4**	**3400-3**	**3400-4**	**3400-5**	**3400-6**
Note: MVS does not support the 2400, 2400-3, or the 2400-4 device.							

If your JES3 complex includes dual-density tape drives, your initialization stream must include certain HWSNAME statements to achieve the best use of high-watermark setup. These statements are necessary because of the way MVS catalogs data sets that you requested to be created on dual-density tape drives. MVS determines which single-density tape drive (of the same series as the dual-density tape drive) uses the same density as the data set. MVS then catalogs the data set as requiring that single-density tape drive.

For example, if you create a data set on a 3400-6 dual-density tape drive at 6250 BPI, MVS catalogs the data set as requiring a 3400-5 tape drive (single density, 6250 BPI). MVS catalogs data sets this way regardless of whether or not your installation includes the single-density tape drive.

This cataloging method aids the device allocation process, because a request for a single-density device has more acceptable alternates for allocation than a request for a dual-density device. (See Table 36.) Thus, in the above example, MVS may allocate either a 3400-5 or a 3400-6 for the data set. If the data set had been cataloged as requiring a 3400-6, MVS could allocate only a 3400-6.

Note: One special case exists in which MVS catalogs a data set as requiring a dual-density device. Because there is no single-density tape drive in the 3400-series with a density of 800 BPI, a data set created on a 3400-4 at 800 BPI is cataloged as requiring a 3400-4.

To use high-watermark setup, you must let JES3 know which device types are valid for HWS. If you have dual-density tape drives in your complex, you must include HWSNAME statements for all single-density tape drives that appear in the catalog as required devices for data sets. Otherwise, JES3 considers requests for those devices, whether through data set catalog entries or otherwise, ineligible for HWS.

Refer again to the example in which MVS catalogs a data set as requiring a 3400-5 tape drive when the data set was created on a 3400-6 tape drive at 6250 BPI. If you do not have any 3400-5 devices in your complex, MVS allocates a 3400-6 device for that data set. (See Table 36.) If you want jobs using that cataloged data set to be eligible for HWS, you must tell JES3 that a request for a 3400-5 is a valid HWS request and that it is equivalent to a request for a 3400-6. Code your HWSNAME statements so that the 3400-6 and 3400-5 appear as alternates to each other:

```
HWSNAME,TYPE=(3400-6,3400-5)
HWSNAME,TYPE=(3400-5,3400-6)
```

See Table 37 for sample HWSNAME statement specifications for various configurations of 3400-series tape drives. The figure shows only the recommended generic device type specifications; you may add any esoteric names appropriate for your installation. Note that when your complex includes a single-density tape drive, the allocation of the single-density device cannot satisfy a request for the dual-density device. Therefore, the two device types are not equivalent. You must not specify the single-density device as an alternate to the dual-density device when the complex includes the single-density device.

Use the sample HWSNAME statements for 3400-series tape drives as a guideline for writing your HWSNAME statements for 2400-series tape drives.

Table 37. HWSNAME Statements for 3400-Series Tape Drive Configurations

For this configuration:			Include the following statements in your initialization stream
3400-6 (1600/ 6250 BPI)	**3400-5 (6250 BPI)**	**3400-3 (1600 BPI)**	
X	X	X	HWSNAME,TYPE=(3400-6) HWSNAME,TYPE=(3400-5,3400-6) HWSNAME,TYPE=(3400-3,3400-6)
X	X		HWSNAME,TYPE=(3400-6,3400-3) HWSNAME,TYPE=(3400-5,3400-3,3400-6) HWSNAME,TYPE=(3400-3,3400-6)
X		X	HWSNAME,TYPE=(3400-6,3400-5) HWSNAME,TYPE=(3400-5,3400-6) HWSNAME,TYPE=(3400-3,3400-5,3400-6)
X			HWSNAME,TYPE=(3400-6,3400-5,3400-3) HWSNAME,TYPE=(3400-5,3400-3,3400-6) HWSNAME,TYPE=(3400-3,3400-5,3400-6)
	X	X	HWSNAME,TYPE=(3400-5) HWSNAME,TYPE=(3400-3)

Examples

Example 1: The following statements define the relationship among the names supplied for a user's tape drives. Assume the user's JES3 complex includes 3400-4, 2400-4, and 2400 tape drives. The esoteric (user-defined) name TAPE encompasses all tape drives in the complex, while the esoteric name DUALDEN encompasses only dual-density tape drives. (Statement numbers to the left of each statement are for the purpose of discussion only.)

```
HWSNAME,TYPE=(TAPE,DUALDEN,3400-4,3400-3,2400-4,2400-3,2400)
HWSNAME,TYPE=(DUALDEN,3400-4,3400-3,2400-4,2400-3,TAPE)
HWSNAME,TYPE=(2400,3400-4,3400-3,2400-4,2400-3,DUALDEN,TAPE)
HWSNAME,TYPE=(2400-4,2400-3,3400-4,3400-3,DUALDEN,TAPE)
HWSNAME,TYPE=(3400-4,3400-3,DUALDEN,TAPE)
HWSNAME,TYPE=(2400-3,2400-4,3400-4,3400-3,DUALDEN,TAPE)
HWSNAME,TYPE=(3400-3,3400-4,DUALDEN,TAPE)
```

Statement 1 defines all the device names that can be used to satisfy a request for UNIT=TAPE. Note that both generic and esoteric alternate names are used. Statement 2 defines all the names that can be used to allocate a UNIT=DUALDEN request. Note that 2400 is not listed because it is not a dual-density device and there are 2400s in the complex. On the other hand, 2400-3 and 3400-3 do appear as alternates because there are no devices of those types in the complex, so a request for one always results in the allocation of a dual-density device. TAPE also appears as an alternate because TAPE could be used to satisfy a DUALDEN request.

In statement 3, all device names are shown as valid alternates for 2400. This is in keeping with allocation rules that allow a single-density request to be satisfied by certain dual-density devices. Statements 4 and 5 define the alternate names for the respective dual-density generic names. Note that 3400-4 is an alternate for 2400-4, but that the reverse is not true. This is because a 2400-4 cannot be used to satisfy a request for a 3400-4.

Statements 6 and 7 define single-density device names that are entered in the catalog for data sets created on 2400-4 or 3400-4 dual-density devices at 1600 BPI.

Assuming the HWSNAME input shown, the following JCL results in one device, a 2400-4, being allocated for the entire job.

```
//TST JOB
//STPA EXEC PGM=IEFBR14
//DDA1 DD DSN=A,UNIT=2400,VOL=SER=V1,DISP=OLD
//STPB EXEC PGM=IEFBR14
//DDB1 DD DSN=B,UNIT=DUALDEN,VOL=SER=V2,DISP=OLD
//STPC EXEC PGM=IEFBR14
//DDC1 DD DSN=C,UNIT=2400-4,VOL=SER=V3,DISP=OLD
```

According to the HWSNAME entries, a 2400-4 can be used to satisfy all unit requests in this job. That is, 2400-4 is an acceptable alternative to the DDA1's request for a 2400 unit (HWSNAME card 3) and DDB1's request for a DUALDEN unit (HWSNAME statement 2). One 2400-4 unit, therefore, will be assigned for DDA1 and this will be propagated to the remainder of the requests.

By contrast, if you want to completely separate the single-density and dual-density drives, the following could be provided.

```
HWSNAME,TYPE=(TAPE,DUALDEN,3400-4,3400-3,2400-4,2400-3)
HWSNAME,TYPE=(DUALDEN,3400-4,3400-3,2400-4,2400-3,TAPE)
HWSNAME,TYPE=(3400-4,3400-3,DUALDEN,TAPE)
HWSNAME,TYPE=(2400-4,2400-3,3400-4,3400-3,DUALDEN,TAPE)
HWSNAME,TYPE=(TAPSING,2400)
HWSNAME,TYPE=(2400,TAPSING)
```

With this HWSNAME input, the same JCL would result in two tape drives being assigned: one 2400 drive, to satisfy the DDA1 request, and the 2400-4 drive to be used for both the DDB1 and DDC1 requests. Note that the single-density tape drives defined as alternates to the dual-density tape drives do not violate the decision to separate dual-density and single-density devices. As in the previous set of HWSNAME statements, these single-density tape drives are equivalent to the dual-density tape drives because a request for one of them will always result in the allocation of a dual-density device.

Example 2: Assume that an installation has 3400-5 and 3400-6 tape drives. The 3400-5 single density tape drive should not be defined as an alternate for the 3400-6 dual density tape drive.

For example, consider the following JCL:

```
//STEPA EXEC PGM=X
//DD1 DD UNIT=3400-5,VOL=SER=VOL001,DISP=OLD
//DD2 DD DSN=ABC,UNIT=AFF=DD1,DISP=OLD
```

Assume that data set ABC is cataloged as residing on volume VOL003 and requiring a device type of 3400-6.

In a complex where both the 3400-5 and 3400-6 devices exist and are JES3-managed, the following HWSNAME statements should be used:

```
HWSNAME,TYPE=(3400-5,3400-6)
HWSNAME,TYPE=(3400-6)
```

This indicates that a 3400-6 is an acceptable alternate for a 3400-5, but the 3400-5 is not an acceptable alternative for a 3400-6. The UNIT affinity in the example, therefore, is negated because the referenced 3400-5 is not a valid subset of the cataloged unit (3400-6). Two devices would be required under these circumstances.

If the JES3 complex contained only 3400-6 tape drives, then the volume requested by DD1 would have to be mounted on a 3400-6 and the unit affinity on DD2 would be valid. However, the HWSNAME information would not allow JES3 to honor the affinity and two devices (3400-6) would still be required. But by modifying the HWSNAME statements as follows, the user could enable JES3 to allocate devices more efficiently:

```
HWSNAME,TYPE=(3400-5,3400-6)
HWSNAME,TYPE=(3400-6,3400-5)
```

Because the installation contains only dual density devices (3400-6), any device request can be satisfied by any available unit.

INCLUDE (Include Initialization Stream Member)

Use the INCLUDE statement to include a *member* in the initialization stream member. Different sections of the initialization stream can be put into different members and included in the primary initialization stream member. The *member* is the PDS member name within the data set specified on the JES3IN DD statement in the JES3 procedure to be included. Up to 4 member levels can be used (the primary initialization stream member and up to 3 INCLUDE level members). Use the INCLUDE statement anywhere after the DYNALLOC statements.

Note: The INCLUDE statement cannot be used if JES3IN DD data set is concatenated, and the members to be included are in a data set other than the first in the concatenation.

Statement Summary

Table 38. INCLUDE Summary

Required/Optional Statement	Optional
Statement Default	None
Placement in Initialization Stream	An INCLUDE statement must be placed in an initialization stream so that it follows all the DYNALLOC statements that are in the stream. This statement must follow the DYNALLOC statements.
Coding Considerations	• The INCLUDE statement is not supported if the JES3IN DD statement is concatenated, and the member to be included is not in the first data set in the concatenation. • All parameters pertaining to the INCLUDE statement must be defined on a single statement; continuation statements are not permitted.
Security Usage	None
Performance Considerations	None
Initialization Stream Overrides	None
Restart or Command Modification	• Cold start, warm start, or hot start with refresh for all parameters. • You may use the INCLUDE statement in the member of the PDS that you specify in the `*MODIFY,CONFIG` command.

Syntax

```
►►──INCLUDE──,MEMBER=member──────────────────────────────────────────►◄
```

Parameters

MEMBER=
Required to identify the member in the data set specified on the JES3IN DD statement in the JES3 procedure.

member
the actual member name in the data set specified on the JES3IN DD statement in the JES3 procedure. This member contains initialization statements that are to be included in the initialization stream.

Example

```
DYNALLOC....
DYNALLOC....
*
INCLUDE,MEMBER=JSAM          Include JSAM related statements
*
INCLUDE,MEMBER=MAINS         Include main processor information
*
INCLUDE,MEMBER=GMS           Include job classes, groups, select modes
*
.
.
.
INCLUDE,MEMBER=UR            Include unit record devices
*
INCLUDE,MEMBER=TAPE          Include tape devices
*
INCLUDE,MEMBER=DASD          Include direct access devices
*
ENDINISH
```

Although you will typically not use the INCLUDE statement in the member you specify on the `*MODIFY,CONFIG` command, segmented initialization streams are useful when used in conjunction with `*MODIFY,CONFIG` processing. For example, suppose all the RJPWS statements are in a member ″RJPWS″ of a PDS. And suppose your IATUX15 supports conditional logic. For example IATUX15 is set up to interrogate the parameter string that is passes and skip over certain initialization statements depending on the parameter value. To add new RJPWS statements to the initialization stream, all that would have to be done is the following:

- Add the new RJPWS definitions to the existing ″RJPWS″ member.
- Add conditional logic in the RJPWS member to just process the new statements when a `*MODIFY,CONFIG` command is issued. For example:

```
*IF PARM.(1,3) = NEW NEWSTUFF   Skip over old definitions if *F,CONFIG

** old RJPWS definitions **

RJPWS,.....
RJPWS,.....
RJPWS,.....
RJPWS,.....
RJPWS,.....

*LBL NEWSTUFF
```

```
** new RJPWS definitions **

RJPWS,.....
RJPWS,.....
```

- Issue the following `*MODIFY,CONFIG` command:

  ```
  *MODIFY,CONFIG,ADD=RJPWS,P=NEW
  ```

  As a result of specifying "P=NEW" the old RJPWS definitions will be skipped and only the new RJPWS definitions will be processed.

INTDEBUG (Initialization Debugging Facility)

Use the INTDEBUG statement to specify error message text and an index value. If the specified message text is issued the number of times indicated by the index value, JES3 issues a U005 JES3 user abnormal end and takes a storage dump. See *z/OS JES3 Diagnosis* for a description of JES3 completion codes.

This initialization debugging facility monitors all occurrences of a specified message up to the occurrence where a dump is being requested. Only one message can be monitored at a time. Following the dump, the main must be reinitialized.

Statement Summary

Table 39. INTDEBUG Summary

Required/Optional Statement	Optional
Statement Default	None
Placement in Initialization Stream	An INTDEBUG statement must be placed in an initialization stream so that it precedes the point where the error message occurs in the JES3OUT listing. (Exception: INTDEBUG must not precede a DYNALLOC statement).
Coding Considerations	1. The INTDEBUG statement must start in column one; it *cannot* be continued, nor can comments be embedded. 2. Only one INTDEBUG statement is active at a time; if more are specified, only the last statement is used.
Security Usage	None
Performance Considerations	None
Initialization Stream Overrides	None
Restart or Command Modification	• Cold start, warm start, or hot start with refresh for all parameters. • You may use the INTDEBUG statement in the member of the PDS that you specify in the `*MODIFY,CONFIG` command.

Syntax

```
►►──INTDEBUG──,index,message$$──────────────────────────────────────►◄
```

Parameters

index
Required to identify which occurrence of a message should produce a dump. The index must be a decimal number from 1 to 9 indicated in column 10 of this card. To determine the value of the index, count the number of times a message occurs after the INTDEBUG statement, up to and including the occurrence that is to cause the dump.

message
Required to indicate text to compare against generated error messages; the text is terminated by $$. The message text may be variable length, in columns 12-69, with $$ indicating the end. The $$ terminator may be placed as far as columns 70 and 71. If the terminator is omitted, the message text is assumed to be in columns 11-71.

Examples

Example 1: In the example which follows, a dump is needed to analyze why, when error message IAT3602 occurs for the third time, it contains meaningless data. This statement is placed so that problem message IAT3602 is the third IAT3602 message after this statement.

```
INTDEBUG,3,IAT3602 MAIN$$
```

Example 2: In the example which follows, error message IAT3251 is being issued for an IOB parameter on a BUFFER statement. To get a dump associated with this parameter error, this statement is placed in front of the BUFFER statement:

```
INTDEBUG,1,IAT3251 BAD KEYWORD,(IOB),SCAN ENDED$$
```

MAINPROC (Define a JES3 Main)

Use the MAINPROC initialization statement to define a processor as a JES3 main. The initialization stream must include one MAINPROC statement for each main that you wish to define to JES3.

Statement Summary

Table 40. MAINPROC Summary

Required/Optional Statement	Required
Statement Default	None
Placement in Initialization Stream	This statement must follow the ENDJSAM statement.
Coding Considerations	1. The SELECT parameter on this statement must correspond to the NAME parameter (specified value or default value) of a SELECT statement. 2. The SPART parameter on the MAINPROC statement must correspond to the NAME parameter on a SPART statement.
Security Usage	None
Performance Considerations	None
Initialization Stream Overrides	The TRKGRPS parameter specification on the SYSOUT and CLASS initialization statements and on the //*MAIN JES3 control statement override the TRKGRPS parameter specification on the MAINPROC initialization statement.

Table 40. MAINPROC Summary (continued)

Restart or Command Modification	• Warm start, cold start, or hot start with refresh for all parameters. • Do not change the sequence of MAINPROC statements during a hot start with refresh. However, you can add or delete statements at the end of the sequence, or you can rename an existing MAINPROC statement to a new one without changing the order of any other existing MAINPROC statements. Use a cold start to change the sequence of MAINPROC statements. Although JES3 will not prevent you from changing the sequence of MAINPROC statements during a warm start, this is not recommended and will in some cases cause undesirable side effects. For example, a job could run on a system other than the system or systems for which it is intended. If you do make this change, evaluate how a change in sequence will affect your operations, for example, consider things such as: – Whether there are any jobs in pre-execution at the time you perform the warm start or if all jobs in the job queue are in output service. – Whether groups and classes have special main limitations or whether they are defined such it does not matter where a job in the class or group runs. – Whether jobs exist that request to run on a particular processor or set of processors by specifying //*MAIN SYSTEM=name or //*MAIN SYSTEM=(name1,name2...); or that request to run on any system other than a particular processor or set of processors by specifying //*MAIN SYSTEM=/name or //*MAIN* SYSTEM=/(name1,name2...). – Whether you have any user modifications that depend on the MPC sequence number. • You can also use the `*MODIFY,G,main,SELECT,MODE,m` command to change the "select mode" for a MAINPROC. • The global processor cannot be deleted during a hot start with refresh. If you attempt to do this, an error message is issued and JES3 initialization ends. • If you IPL and start JES3 on a processor that is not currently defined by a MAINPROC statement, you can add the processor with a hot start with refresh only if you do not intend to bring it up as the global at the same time. If you do intend to make it the global, you must perform a warm or cold start. Alternatively, you can perform a Dynamic System Interchange (DSI) to temporarily make an existing processor the global, add this processor as a local, and then perform a DSI to this processor after it has been added. • During a hot start with refresh, the parameters PRTPAGE and FIXPAGE cannot be changed unless the processor described by the MAINPROC statement is IPLed. • During a hot start with refresh, if any MAINPROC statements are added, deleted, or changed, all processors that are below the z/OS 1.4.0 JES3 level must be IPLed.

Syntax

```
►►──MAINPROC──,NAME=main──┬──────────────────┬──┬──────────────────────────────────────┬──►
                          └─,SYSTEM=JES3─────┘  └─,FIXPAGE=──┬─5──────────────┬──┘
                                                             └─fixedpages─────┘

►──┬──────────────┬──┬──────────────────────────────────────────────────────────────┬──►
   └─,ID=msgprefix┘  └─,JESMSGLMT=──(──┬─0──────────┬──,──┬─10─────────┬──)──┘
                                       └─WTO_limit──┘     └─Interval───┘

►──┬──────────────────────────┬──┬──────────────────────────────────────────────┬──►
   └─,MDEST=──┬─65─────┬──┘  └─,PRTPAGE=──(──┬──────────┬──┬──────────────┬──)──┘
              ├─Mcode──┤                     └─csapages─┘  └─,auxpages────┘
              ├─M1─────┤
              └─nnn────┘

►──┬──────────────────────────┬──┬──────────────────────────┬──────────────────────────►
   └─,SELECT=──┬─JS3BATCH─┬──┘  └─,SPART=partionname──┘
               └─selmode──┘

►──┬──────────────────────────────────────────────────────────────────────────────────┬──►◄
   └─,TRKGRPS=──(──┬─1────────┬──┬─2────────┬──)──┘  └─,USRPAGE=──┬─4──┬──┘
                   └─prigrps──┘  └─,secgrps─┘                     └─nn─┘
```

Parameters

NAME=

Specifies the name of a JES3 main. The name can be 1 to 8 characters. The name should match the purpose of the main, or at least the hardware it is using. You also use this name in operator commands and in the JES3 CLASS, DEVICE, GROUP, MSGROUTE, and SETACC initialization statements to refer to the main. It must be the first or second parameter on the statement.

Do not use names or abbreviations of operator commands such as 'CONTROL', or message destination class names. Do not use the terms 'short,' 's,' 'all,' or 'ALL' as names of mains.

Ensure that the name you specify matches the name you specify on the SYSNAME parameter in the IEASYSxx member of the MVS SYS1.PARMLIB data set that is used to IPL the system. If the names do not match, JES3 initialization will fail on that system. See *z/OS MVS Initialization and Tuning Guide* for additional information about the IEASYSxx member of the MVS SYS1.PARMLIB data set.

SYSTEM=

Specifies that JES3 is running on this main. You do not need to code this parameter.

FIXPAGE=

Specifies the number of pages of USAM protected data buffers (PBUFs) that JES3 is to fix in storage during JES3 initialization.

- If fixedpages is less than csapages (specified on the PRTPAGE parameter), JES3 fixes the specified number of pages in ECSA only.
- If fixedpages is greater than csapages, JES3 fixes all PBUF pages in ECSA. If you specify auxpages on the PRTPAGE parameter, JES3 determines the remaining number of pages to be fixed (fixedpages – csapages) and fixes that number of pages in the JES3 auxiliary address space.

ID=
Specifies a message prefix (1 to 8 characters) for every message received *from* this JES3 main and logged on the MDEST console (determined by the MDEST parameter). This prefix will precede the R prefix which automatically identifies every message that is received.

To suppress the automatic R prefix, code a pound sign (#) as the last character of the prefix. For example, RID=SYS2 provides SYS2R=message; but RID=SYS2# provides SYS2=message.

JESMSGLMT=
Specifies how you want JES3 to control the issuing of messages by establishing message limits.

WTO_limit
Specifies the maximum number (0–99999999) of messages that can be issued within a period of time defined by the ″Interval″ subparameter before JES3 issues message IAT6850 to prompt operator action. IAT6850 indicates both the **jobname** and **system** on which the job is running.

This message is primarily intended for automation processing.

If no value or 0 (the default) is specified, then no monitoring of JES3 issuing messages takes place.

Interval
Specifies the period of time (0–32767 seconds) to which the WTO limit subparameter applies.

You specify ″0″ to indicate that message will be issued every time the WTO limit is reached, regardless of the time it takes to arrive at that limit.

The actual interval value used by the system is calculated using the minimum resolution of the first word fo the STCK instruction value (1.048576 seconds) and rounded up or down to the nearest integer.

MDEST=
Specifies the routing information for messages that are about this main. This value may be specified as a JES3 destination class selected from the range M1 to M32, or as an MVS routing code.

If a routing code is used, nnn specifies a decimal number from 1 through 28, or 41 through 128. IBM reserves routing codes 29 through 40 for it's use. If these route codes are specified, they will ignored.

If a JES3 destination class is specified, the MVS routing code equivalent of the destination class is used to route the messages. Refer to *JES3 Initialization and Tuning Guide* for a summary of the JES3 destination classes and their routing code equivalents.

PRTPAGE=
Specifies the number of pages of storage that JES3 may use as USAM protected data buffers (PBUFs). For more information about defining buffers see *z/OS JES3 Initialization and Tuning Guide.*

csapages
Specifies the number of pages of ECSA that you want JES3 to use.

auxpages
Specifies the number of pages in the JES3 auxiliary address space that you want JES3 to use. The total number of pages (csapages + auxpages) that you can specify must be between 16 and 16,383 or 16 and 32,767 inclusive, depending on the number of buffers per page.

The maximum number of pages is 32,767 for systems with one buffer per page (a buffer size greater than 2036 bytes) or 16,383 for systems with two buffers per page (a buffer size of 2036 or less). You specify the size of buffers on the BUFSIZE parameter of the BUFFER initialization statement.

Note: Specifying more buffers than are appropriate for the available amount of central storage can degrade performance. A value of 16,383 consumes approximately 64 megabytes of virtual storage (some in ECSA and some in the JES3 auxiliary address space as defined on the csapages and auxpages parameters). Specifying a maximum of 32,767 consumes approximately 128 megabytes of virtual storage (some in ECSA and some in the JES3 auxiliary address space as defined on the csapages and auxpages parameters).

If you do not want to allocate JES3 auxiliary storage, specify 0 as the auxpages value.

JES3 uses the following defaults if you do not specify values for the PRTPAGE parameter or both the ***csapages*** and ***auxpages*** parameters:

csapages: 16 times the number of spool data sets or 512, whichever is smaller.

auxpages: 0

If only one subparameter is specified, the other subparameter defaults to zero.

SELECT=
Specifies the name of the job selection mode to be initially assigned to this main. The scheduling controls associated with this job selection mode should be appropriate for the main being defined by this MAINPROC statement. The selmode must match the NAME parameter on a SELECT initialization statement (except if the default JS3BATCH is used).

SPART=
Specifies the spool partition that JES3 is to use for jobs that execute on the main defined by this statement. The partition name must match a partition name specified on an SPART statement. To specify the default spool partition, omit the SPART parameter.

If you specify an undefined partition name, JES3 uses the default partition.

A partition name specified on a //*MAIN JES3 control statement or on a CLASS statement can override the partition name specified by this parameter. For a discussion of the order of overrides and when they occur, see "Determining the Order of Spool Partition Overrides" and "How the User Can Request A Spool Partition" in *z/OS JES3 Initialization and Tuning Guide* .

If you specify an invalid subparameter, JES3 uses the parameter default.

TRKGRPS=
Specifies the number of track groups (as defined by the GRPSZ parameter on the BUFFER or SPART statement) JES3 is to allocate to jobs that execute on this main. For guidelines on how to determine the appropriate value for the TRKGRPS parameter for your installation, see "Determining Track Group Allocation Sizes" in *z/OS JES3 Initialization and Tuning Guide*.

prigrps
Specifies the number of track groups to be initially allocated to jobs that execute on this main. The specified value may be 1 through 9.

secgrps
Specifies the number of track groups to be allocated to jobs that execute on this main subsequent to their primary allocation. JES3 allocates the specified amount of spool space after the job uses up its initial allocation, and again (for an unlimited number of times) when the job uses up each secondary allocation and requests more spool space. The specified value may be 1 through 9.

If you specify an invalid subparameter, JES3 uses the parameter default.

USRPAGE=
Specifies the number of 4K pages for each open SYSOUT data set. The USRPAGE parameter indicates pages of user address space for SYSOUT buffers. These pages are used as required and released when they are no longer required. Specify a 1- or 2-digit number from 1 to 20.

If you specify an invalid subparameter, JES3 uses the parameter default.

MSGROUTE (MVS Message Route Table)

Use the MSGROUTE statement to control the routing of subsystem modifiable messages (such as most MVS-issued messages). If you do not include a MSGROUTE statement, the routing attributes of the messages that originate from that processor are not modified by JES3 MSGROUTE processing. Even though MSGROUTE processing may not make modifications, a message is still eligible for other forms of JES3 message routing.

When a message is issued with multiple routing codes, JES3 selects a single routing code to use for MSGROUTE processing. See *z/OS JES3 Initialization and Tuning Guide* for more information.

Statement Summary

Table 41. MSGROUTE Summary

Required/Optional Statement	Optional
Statement Default	None.
Placement in Initialization Stream	This statement must follow the ENDJSAM statement.
Coding Considerations	1. The console parameter must be the same as the name of an MCS console or an extended MCS console. 2. JES3 will not remove routing code 9 (security) from a message, even when the ,J option is specified in the MSGROUTE entry used for the message.
Security Usage	None.
Performance Considerations	None.
Initialization Stream Overrides	None.

Table 41. MSGROUTE Summary (continued)

Restart or Command Modification	• Hot start with refresh for all parameters. • You can use the JES3 `*INQUIRY,M` and `*MODIFY,M` commands to inquire about, and dynamically change the mappings of MVS routing codes and JES3 destination classes.

The following chart shows the parameters you should include or omit to route messages to the desired destination:

To route messages:	**Use these parameters:**
To the original destination(s) specified by the message issuer	Omit ***destclass, console, J,*** or omit the routing code.
To a specific console	Specify ***console*** and any other parameters.
To the specified destination class/routing code **in place** of the routing code(s) specified by the message issuer	Specify ***J*** and any other parameters.
To the specified destination class/routing code **in addition to** the routing code(s) specified by the message issuer	Omit ***J***. Specify any other parameters.
To only the hardcopy log	Specify ***J*** only.

Syntax

```
►►──MSGROUTE──,MAIN=main──┬─────────────┬──────────────────────────►◄
                          └─┤ Routing ├─┘
```

Routing:

```
   ┌──────────────────────────────────────────────────────────┐
   ▼                                                          │
├──┬─────────────────┬─(─┬───────────┬─,─┬─────────┬─,J─)─┴──────────┤
   └─,routecode=─────┘   └─destclass─┘    └─console─┘
```

Parameters

MAIN=
Specifies a 1- to 8-character name of the main to which these definitions apply. The name must match the name you specify on the NAME parameter on a MAINPROC statement.

routecode =
Specifies the MVS routing code and a console name and/or destination class to which you want messages sent.

routecode
Specifies an MVS routing code which between 1 and 128 inclusive.

destclass
Specifies a JES3 console destination class to which you want messages with the designated MVS routing code mapped.

console
Specifies the name of an MCS console or an extended MCS console.

J Specifies that the routing code equivalent of the destination class is to be used for the message instead of the message's original routing code(s). If you do not specify "J", the routing code equivalent will be merged with the message's original routing code(s).

Table 42. MSGROUTE Summary - Message from the Local

MSGROUTE Parameter	Console
None or routing code omitted	The message is displayed on consoles receiving the original routing code(s).
Destination class only	The message is displayed on consoles receiving the original routing code and on consoles receiving the equivalent routing code of the destination class.
Destination class and J	The message is displayed on consoles receiving the equivalent routing code of the destination class.
Console name only	The message is displayed on consoles receiving the original routing code(s) and on the console with the specified name.
J only	MCS and extended consoles receiving the hardcopy destination
Destination class and console name	Consoles receiving the original routing code(s) and on consoles receiving the equivalent routing code of the destination class. Also displayed on the console with the specified name.
Console name and J	Console with the specified name.
Destination class, console name and J	Console with the specified name and on consoles receiving the equivalent routing code of the specified destination class.

The following table summarizes message routing for messages issued from the global processor.

Table 43. MSGROUTE Summary - Message from the Global

MSGROUTE Parameter	Console
None or routing code omitted	The message is displayed on consoles receiving the original routing code(s).
Destination class only	Consoles receiving the original routing code and on consoles receiving the equivalent routing code of the destination class.
Destination class and J	The message is displayed on consoles receiving the equivalent routing code of the destination class.
Console name only	The message is displayed on consoles receiving the original routing code(s) and on the console with the specified name.
J only	MCS and extended consoles receiving the hardcopy destination.
Destination class and console name	Consoles receiving the original routing code(s) and on consoles receiving the equivalent routing code of the destination class. Also displayed on the console with the specified name.
Console name and J	Console with the specified name.
Destination class, console name and J	Console with the specified name and on consoles receiving the equivalent routing code of the specified destination class.

Many factors influence the routing of message traffic. Refer to *z/OS JES3 Initialization and Tuning Guide* for additional information.

If you have not defined any console to display a message, it is sent only to the system log provided you define at least one of the message's original routing code(s) on HARDCOPY parameter in the CONSOLxx member of SYS1.PARMLIB or the issuer originally specified that the message be sent to the log (and no other facility such as MPF overrides that specification). Otherwise, the message does not appear on any console or in the system log.

NJECONS, (Console for NJE)

Use the NJECONS initialization statement to specify the message class to which JES3 is to send messages about the JES3 job entry network.

Statement Summary

Table 44. NJECONS Summary

Required/Optional Statement	Optional
Statement Default	`NJECONS,CLASS=108` `(equivalent to JES3 Dest Class S12)`
Placement in Initialization Stream	This statement must follow the ENDJSAM statement.
Coding Considerations	If more than one NJECONS statement is specified in the initialization stream, only the first statement is used. All NJECONS statements after the first are ignored.
Security Usage	None
Performance Considerations	None
Initialization Stream Overrides	None
Restart or Command Modification	Cold start, warm start, or hot start with refresh for all parameters.

Syntax

```
►►──NJECONS──┬──────────────────────────┬──────────────────────────────────►◄
             └─,CLASS=──┬─108─────────┬─┘
                        ├─msgdest─────┤
                        └─S12─────────┘
```

Parameters.

CLASS=

Specifies the message destination to which you want JES3 to send network messages. This destination can be specified as a single JES3 destination class or a single MCS routing code. Specify this message destination on the consoles that you want to receive the network messages.

If a routing code is used, nnn specifies a decimal number from 1 through 28, or 41 through 128. IBM reserves routing codes 29 through 40 for it's use and will ignore these codes if specified.

NJERMT (JES3 Network Node Definition)

Use the NJERMT initialization statement to define a node in the JES3 job entry network.

Statement Summary

Table 45. NJERMT Summary

Required/Optional Statement	Optional
Statement Default	None
Placement in Initialization Stream	This statement must follow the ENDJSAM statement.
Coding Considerations	1. You must code a NJERMT statement for the home node (your node) and one for each remote node that will communicate with the home node. 2. All DEVICE statements with the parameter DTYPE=SYSMAIN specified must precede the NJERMT statement. 3. The JNAME parameter on a DEVICE statement that also includes a DTYPE=NJELINE parameter must match the LINE parameter on the NJERMT statement. 4. The name specified on the NJENAME parameter of the MVS/BDT SYSID statement (for the BDT subsystem which processes SNA/NJE work) must match the name specified on the BDTID parameter of the NJERMT statement. 5. If you are using the NAME= parameter for an XCF groupname default, (XCFGRPNM on the OPTIONS initialization statement), then the name must be 1-8 alphanumeric characters including $, # and @.
Security Usage	1. Use the expected password (EXPWD) parameter to specify a password that the home node expects to receive from a directly connected BSC node. The password allows a remote node to start a communication line to the home node. You can define the password (PWD) parameter that the home node must send to a directly connected BSC node. This password allows the home node to start a communication line to the remote node. In addition, the NJERMT statement contains the EXSIG and SIG passwords for dial-up lines. 2. Use the PWCNTL parameter to specify whether job passwords should be sent encrypted, sent without encryption, or checked only at the local node.

Table 45. NJERMT Summary (continued)

Performance Considerations	MAXLINE and STREAM affect NJE throughput. Specify STREAM=2 if you prefer that small jobs streams not be held up by larger SYSOUT streams. Use as many lines between two nodes as possible to allow more work to be sent concurrently. NJEPR and NJEPU act as a throttle on output service. The amount of work being actively transmitted is limited by the number and speed of the transmission lines to directly connected nodes. The amount of SYSOUT work queued for transmission by output service is limited by the NJEPR and NJEPU parameters. You should set these values high enough to keep the lines busy on a moderately loaded system, but low enough to prevent too much work from being queued, which can degrade performance on a heavily loaded system. The size of JSAM buffers (defined on the BUFSIZE parameter of the BUFFER statement) affects performance. Use the largest buffer size possible to maximize networking performance.
Initialization Stream Overrides	None

Table 45. NJERMT Summary (continued)

Restart or Command Modification	Cold start, warm start, or hot start with refresh for all parameters. Use the: • `*MODIFY,NJE,ADD=` command to add a directly or indirectly connected node. • `*MODIFY,NJE,ADDAL=` command to add an alias. • `*MODIFY,NJE,DEL=` command to delete an indirectly connected node or an alias. • `*MODIFY,NJE,NAME=node,NETHOLD=` command to change the NETHOLD parameter. • `*MODIFY,NJE,NAME=node,PATH=` command to change the PATH parameter. • `*MODIFY,NJE,NAME=node,PWCNTL=` command to change the PWCNTL parameter. • `*MODIFY,NJE,NAME=node,RETRYCT=` command to change the RETRYCT parameter. • `*MODIFY,NJE,NAME=node,TYPE=` command to change the TYPE parameter. • `*MODIFY,NJE,NAME=node,PRTDEF=p` command to change the default print class for the home node or an alias. • `*MODIFY,NJE,NAME=node,PUNDEF=n` command to change the default punch class for the home node or an alias. • `*MODIFY,NJE,NAME=node,PRTTSO=t` command to change the default TSO class for the home node or an alias. • `*MODIFY,NJE,NAME=node,PRTXWTR=x` command to change the default external writer class for the home node or an alias. • `*MODIFY,NJE,NAME=node,SP=` command to change the SPART parameter. **Note:** The NAME parameter on the NJERMT statement that defines HOME=YES is the default for the XCFGRPNM parameter on the OPTIONS statement during a warm or cold start. If the home node is changed during a hot start with refresh and the XCFGRPNM parameter is not specified, the value of XCFGRPNM that was determined from the home node definition during the last warm or cold start remains in effect.

Syntax

```
►►─NJERMT──┬─┬─┬─,NAME=nohome──────┬─┬──────────────────────────────────────►
           │ │ │                   │ │                                      │
           │ │ │            (1)    │ │  ┌─NO──┐                             │
           │ │ └─,NAME=home────────┘ │  ├─YES─┤                             │
           │ └─,ALIAS=aliasnam───────┘  └─,AUTO=──┴──────────────────────────┘
           │                                      ┌─5──┐
           │                                      ├─mm─┤
           │                                      └─,RDLY=──┴──────────────┘

►──┬──────────────┬──┬──────────────┬──┬──────────────┬──────────────────────►
   └─,BDTID=sysid─┘  │              │  │              │
                     └─,BFSIZE=──┬─400──┬─┘  └─,CTC=──┬─NO───┬─┘
                                 └─nnnn─┘              └─YES──┘
```

```
►──┬──────────────────────────┬──┬──────────────────────┬──┬──────────────────────┬──►
   │                          │  │                      │  │                      │
   └,DEFCLASS=──┬─YES─┬──┘  └,EXPWD=recpassword1┘  └,EXSIG=recpassword2┘
                └─NO──┘

►──┬──────────────────────────┬──┬──────────────────────┬──┬──────────────────────┬──►
   │                          │  │                      │  │                      │
   └,HOME=──┬─NO──┬──┘  └,LINE=linename┘  └,MAXLINE=──┬─1─┬──┘
            └─YES─┘                                   │ 0 │
                                                      │ 2 │
                                                      └ 3 ┘

►──┬──────────────────────────┬──┬──────────────────────┬──┬──────────────────────┬──►
   │                          │  │                      │  │                      │
   └,NETHOLD=──┬─NO──┬──┘  └,NJEPR=──┬─3──┬──┘  └,NJEPU=──┬─3──┬──┘
               └─YES─┘               └─nn─┘               └─nn─┘

►──┬──────────────────────┬──┬──────────────────────────┬──┬──────────────────────────┬──►
   │                      │  │                          │  │                          │
   └,PATH=nodename┘  └,PRTDEF=printdefault┘  └,PRTTSO=printdefault┘

►──┬──────────────────────────┬──┬──────────────────────┬──┬──────────────────────┬──►
   │                          │  │                      │  │                      │
   └,PRTXWTR=printdefault┘  └,PUNDEF=punchdefault┘  └,PWD=sendpassword1┘

►──┬──────────────────────────┬──┬──────────────────────┬──┬──────────────────────┬──►
   │                          │  │                      │  │                      │
   └,PWCNTLE=──┬─SENDCLR─┬──┘  └,RETRYCT=──┬─20──┬──┘  └,SIG=sendpassword2┘
               │ SENDENC │                 └─nnn─┘
               └LOCALCHK┘

►──┬──────────────────────┬──┬──────────────────────┬──┬──────────────────────┬──►
   │                      │  │                      │  │                      │
   └SPART=spart┘  └,STREAM=──┬─1─┬──┘  └,TYPE=──┬─BSC─┬──┘
                             └─2─┘               └─SNA─┘

►──┬──────────────────────────┬──────────────────────────────────────────────────►◄
   │                          │
   └,XNAMEREQ=──┬─YES─┬──┘
                └─NO──┘
```

Notes:

1 You must specify HOME=YES.

Parameters

NAME=

Specifies a 1-to-8 character node name. No two nodes should have the same node name. The names that can be specified are:

- Node name
- Home name

Notes:

1. You cannot specify the nodenames LOCAL or ANYLOCAL or ALL. They are reserved by JES3.
2. See the coding considerations in Table 45 on page 136 for information related to XCF group names.

ALIAS=

Specifies an alias, an alternate name for the home node, such that work destined for this name is recognized as being destined for the home node.

Notes:

1. You cannot specify the names LOCAL, or ANYLOCAL, or ALL. They are reserved by JES3.

2. The NAME= parameter and the ALIAS= parameter are mutually exclusive.

AUTO=
Specifies, for a directly-connected remote BSC node, whether JES3 is to automatically restart the line to the node if the remote node interrupts transmission. Specifying YES causes JES3 to automatically restart the line. If you specify NO or omit this parameter and the remote node interrupts transmission, the operator must restart the line. Code this parameter on the NJERMT statement that defines a directly-connected remote BSC node.

RDLY=
Specifies, in minutes, the amount of time that JES3 networking is to wait before it automatically restarts an interrupted line. Allowable values for mm are 0-99. Code this parameter on an NJERMT statement that defines a directly-connected remote BSC node.

BDTID=
Specifies the 1-8 character name of the MVS/BDT subsystem in your JES3 complex that is to process SNA/NJE transactions. This name must match the name specified on the MVS/BDT SYSID initialization statement.

Include this parameter only on the NJERMT statement that defines the home node. If this parameter is not included, JES3 sends SNA/NJE transactions to the default MVS/BDT subsystem that is named on the JES3 SYSID statement.

BFSIZ=
Specifies the buffer size to be used for communication with the directly-connected remote BSC node defined by this statement. The system programmer at the remote node must specify the same buffer size as you specify. Do not specify a buffer size of less than 400 bytes.

The maximum buffer size allowed is the size of the spool buffers (specified via the BUFSIZE parameter on the BUFFER statement) minus 44.

CTC=
Specifies the type of connection between the home node and the directly-connected remote BSC node defined by this statement. For a node that is connected via a channel-to-channel (CTC) adapter, specify YES. For a node that is connected via a leased line or a dial-up line, omit this parameter or specify NO. This parameter is ignored when TYPE=SNA is specified.

DEFCLASS=
Specifies whether inbound SYSOUT can be assigned a default SYSOUT class if the data set's characteristics, as specified by the sending node, do not match the characteristics of the specified SYSOUT class as defined on this, the receiving node, on the SYSOUT statement. "Characteristics" includes whether the SYSOUT is print or punch output, and whether it is held for TSO, held for external writer, or not held. This parameter is valid only when defining the home node or an alias of the home node.

DEFCLASS=YES
Indicates that default SYSOUT classes may be assigned. The PRTDEF, PUNDEF, PRTTSO, and PRTXWTR parameters can be used to specify the default classes.

DEFCLASS=NO
Indicates that default SYSOUT classes will not be assigned. The SYSOUT class specified by the sending node will be retained. The output will be held if the execution node indicated that the output should be held, or if the SYSOUT class is defined as held on the receiving node.

You might want to use DEFCLASS=NO, for example, so that you can submit jobs that produce output that is held for external writer, even if the job will execute on a non-JES3 node. If the SYSOUT class is defined on the receiving node as held for external writer, and DEFCLASS=NO is specified on the receiving node, then the ouput will be held.

EXPWD=
Specifies a 1-8 character password that the home node expects to receive from the directly-connected remote BSC node defined by this statement. This password allows the remote node to start the line to the home node.

For the remote node to be able to send the password, the system programmer at the remote node must also specify the password by coding PWD=sendpassword1 on the NJERMT statement that defines your node. If you omit this parameter, the remote node will be able to start the line without sending a password.

EXSIG=
Specifies a 1-8 character password that the home node expects to receive from the directly-connected remote BSC node defined by this statement. This password identifies the remote node that started a dial-up line (with a dial-up line, several remote nodes can have the capability to start the same line). Once identified, the remote node can communicate with the home node.

The password, recpassword2, can be any character string. Code this password only for remote nodes that are connected to the home node by dial-up lines.

For the remote node to be able to send the password, the system programmer at the remote node must also specify the password by coding SIG=sendpassword2 on the NJERMT statement that he codes to define your node. If you omit this parameter, any remote node that can start the line to the home node will be able to communicate with the home node.

HOME=
Specifies whether this NJERMT statement defines the home node or a remote node. If it defines the home node, code YES. For all other nodes, omit this parameter or code NO.

LINE=
Specifies the 1-8 character name of the line that connects the home node to the directly-connected remote BSC node defined by this statement. This name must match the name specified via the JNAME parameter on the DEVICE statement that defines the line. When the operator starts the line, he can override the name you have specified with this parameter. If you omit the LINE parameter, the operator must specify a line name when starting the line.

MAXLINE=
Specifies the maximum number of lines that the operator can start to the directly-connected remote BSC node defined by this statement. For an indirectly-connected remote node or the home node, specify 0.

NETHOLD=
Specifies whether incoming NJE SYSOUT data sets that appear to be NETDATA output should always be held for a TSO user to receive (NETHOLD=YES) or should be made available for JES3 writers to process if the destination is known to JES3 as a device (NETHOLD=NO). This parameter is valid only when defining the home node by specifying HOME=YES on the initialization statement.

NJEPR=
Specifies the number (1-99) of logical network printers you want generated for the home node. Code this parameter on the NJERMT statement that defines the home node.

NJEPU=
Specifies the number (1-99) of logical network punches you want generated for the home node. Code this parameter on the NJERMT statement that defines the home node.

PATH=
Specifies the name of the first node in the path to an indirectly-connected node. Code this parameter on the NJERMT statement that defines the indirectly-connected node.

If you omit this parameter, JES3 networking assumes the home node and the remote node are directly connected.

PRTDEF=
Specifies the print class default for networking output received at the home node. If you omit this parameter, JES3 networking assumes print class A. This parameter is valid only when defining the home node (that is, when you also specify HOME=YES on this initialization statement) or an alias of the home node (that is, when you define the node name using the ALIAS= parameter on this initailization statement).

PRTTSO=
Specifies the TSO data set default class for networking output received at the home node. If you omit this parameter, JES3 uses the class specified on the PRTDEF parameter. This parameter is valid only when defining the home node (that is, when you also specify HOME=YES on this initialization statement) or an alias of the home node (that is, when you define the node name using the ALIAS= parameter on this initailization statement).

PRTXWTR=
Specifies the external writer data set default class for networking output received at the home node. If you omit this parameter, JES3 uses the class specified on the PRTDEF parameter. This parameter is valid only when defining the home node (that is, when you also specify HOME=YES on this initialization statement) or an alias of the home node (that is, when you define the node name using the ALIAS= parameter on this initailization statement).

PUNDEF=
Specifies the punch class default for networking output received at the home node. If you omit this parameter, JES3 networking assumes punch class B. This parameter is valid only when defining the home node (that is, when you also specify HOME=YES on this initialization statement) or an alias of the home node (that is, when you define the node name using the ALIAS= parameter on this initailization statement).

PWD=
Specifies a 1-8 character password that the home node must send to the directly-connected remote BSC node defined by this statement. This password allows the home node to start the line to the remote node.

If the remote node is expecting a password and you omit this parameter or code it incorrectly, the home node will be unable to start the line. If the remote node is not expecting a password and you code this parameter, the remote node ignores the password and allows the home node to start the line.

PWCNTL=
Specifies whether you want passwords sent to the remote node encrypted (SENDENC), without encryption (SENDCLR), or verified locally (LOCALCHK). If you select password encryption, user verification is performed at the remote node only. If you select local verification, user verification is performed at the local node and no password is sent to the remote node.

JES3 uses a security product, such as RACF, to validate job passwords for NJE. If you specify PWCNTL=LOCALCHK and RACF is not installed or it is inactive on your local node, password validation is performed only at the execution node.

RETRYCT=
Specifies the number (1-300) of attempts (retries) that a node makes to successfully transmit a buffer of data before terminating the line to a directly connected remote BSC node. The most common error detected, an adaptor timeout, takes approximately three seconds to detect (for example, if you specify a retry value of 20, JES3 will terminate the line after approximately 1 minute). Specifying a larger value allows you to maintain communication during events that can cause extensive timeouts, such as remote dumps. JES3 ignores this parameter if you specify CTC=YES.

SIG=
Specifies a 1-to 8-character password that the home node must send to the directly-connected remote BSC node defined by this statement. Code this password only if the home node and the remote node are connected by a dial-up line.

If the remote node is expecting a password and you omit this parameter or code it incorrectly, the home node will be unable to communicate with the remote node. If the remote node is not expecting a password and you code this parameter, the remote node ignores the password and allows communication with the home node.

SPART=
Specifies the spool partition that JES3 is to use for inbound NJE stream. The partition name must match the partition name specified on one of the SPART statements. To accept the default spool partition for inbound NJE stream, omit this parameter. If you specify a partition name that has not been defined on an SPART statement, JES3 will ignore this parameter and use the default spool partition. If you specified an invalid subparameter, JES3 uses the parameter default. You cannot specify this parameter in alias nodes.

STREAM=
Specifies the number of concurrent data streams that JES3 networking is to transmit on one line between the home node and the directly-connected remote BSC node defined by this statement.

Note: STREAM=2 is not allowed for directly connected, remote BSC nodes, running RSCS under VM.

TYPE=
Specifies the networking protocol to be used for communicating with a directly-connected remote node. Include this parameter only when defining a directly-connected remote node.

BSC
Specifies a BSC networking protocol.

SNA
Specifies a SNA networking protocol.

XNAMEREQ=
Specifies whether inbound SYSOUT can be held for processing by an external writer if no external writer name was supplied by the sending node. This parameter is valid only when defining the home node or an alias of the home node.

XNAMEREQ=YES
Indicates that an external writer name must be provided for inbound SYSOUT to be held for external writer. Inbound SYSOUT with no external writer name will be put on the writer queue or held for TSO, depending on what was specified at the sending node, and may be assigned the default SYSOUT class from the PRTDEF, PUNDEF, or PRTTSO parameter.

XNAMEREQ=NO
Indicates that an external writer name is not required for inbound SYSOUT to be held for external writer. Inbound SYSOUT will be held for external writer if the SYSOUT class is defined with HOLD=EXTWTR and the sending node indicated that the output is held for external writer.

Note: The sending node must be running JES3 in order to designate the SYSOUT as held for external writer without providing an external writer name.

Examples

Example 1: The following example defines a home node and a remote node in a BSC job entry network. The DEVICE statement defines the CTC connection between the remote node and the home node.

```
NJERMT,NAME=NODE1,HOME=YES,MAXLINE=0
NJERMT,NAME=NODE2,LINE=LINE1,CTC=YES,TYPE=BSC
DEVICE,DTYPE=NJELINE,JNAME=LINE1,JUNIT=(207,SY1,TP)
```

Example 2: The following example defines a home node and a remote node in a SNA job entry network.

```
NJERMT,NAME=NODE3,HOME=YES,BDTID=SYSA1
NJERMT,NAME=NODE4,TYPE=SNA
```

Example 3: The following example defines a home node and an alias in either a BSC or SNA job entry network.

```
NJERMT,NAME=NEWYORK,HOME=YES
NJERMT,ALIAS=BROOKLYN
```

OPTIONS (JES3 Options)

Use the OPTIONS initialization statement to specify:

- The type of MVS system dump to be taken, if needed.
- Whether or not a dump should be taken when a termination condition exists.
- The job numbering limits for JES3 jobs.
- Whether you want the writer output multitasking facility enabled or disabled.
- The number of scheduler elements needed to support the largest job that will be run in the JES3 complex.

Statement Summary

Table 46. OPTIONS Summary

Required/Optional Statement	Optional

Statement Default	`OPTIONS,DUMP=JES,DUMPLINS=24576,`
	`WANTDUMP=YES,JOBNO=(1,9999,9999),`
	`MT=OFF,SE=10,SDI=ON,DUPJOBNM=NO`

Placement in Initialization Stream	This statement must precede the ENDJSAM statement.
Coding Considerations	• Only one OPTIONS statement should be included in an initialization stream. If more than one is included, the parameters explicitly specified on the last OPTIONS statement dominate. • You can suppress JES3 FAILSOFT dumps taken on the global using the JES3 dump suppression facility. To activate this facility, either omit the WANTDUMP parameter or specify WANTDUMP=YES on this statement. See "Recovery and Service Aids" in *z/OS JES3 Commands* for more information about using the JES3 dump suppression facility.
Security Usage	None
Performance Considerations	None
Initialization Stream Overrides	None

Table 46. OPTIONS Summary (continued)

Restart or Command Modification	• Warm or cold start for all parameters except the SE parameter. Use a cold start to change the value of the SE parameter. If you do not change internal job numbering (using the JOBNO parameter), JES3 uses the next available job number. • Hot start with refresh for all parameters except SE and XCFGRPNM. Use a cold or warm start to change XCFGRPNM. If you change the JOBNO parameter during a hot start with refresh such that jobs are deleted, and no IPL is being performed, it is your responsibility to make sure that no jobs that are being deleted are active on the main. JES3 issues messages IAT4131 and IAT4133 for all jobs that are deleted by a change in the JOBNO parameter. You can ignore these messages for active jobs provided that for every active job that is deleted, the processor on which the job was running is IPLed. If you do not IPL the processor on which jobs to be deleted are active, you must either wait for these active jobs to end or cancel them. The active jobs must end before you perform this hot start with refresh. When, during a hot start with refresh, JES3 detects an active job that is about to be deleted, JES3 determines if the processor in question is still active and, if so, issues messages IAT3101, IAT2061, and IAT2064 (IAT3062 is issued only in error cases). JES3 issues these messages only once per processor. See *z/OS JES3 Messages* for an explanation of these messages. When IAT2061 and IAT2064 are issued, the processor must be IPLed in order to continue the hot start with refresh; a CANCEL reply is accepted but will abend JES3. • Use the `*MODIFY,X,D=INTRDR` command to change the INTRDR parameter. • Use the `*MODIFY,MT` command to change the MT parameter. • Use the `*MODIFY,Q,SDI=` command to change the SDI parameter. • Use the `*MODIFY,WANTDUMP=` (or `*MODIFY,WDMP=`) command to change the WANTDUMP parameter. **Note:** The NAME parameter on the NJERMT statement that defines HOME=YES is the default for the XCFGRPNM parameter on the OPTIONS statement during a warm or cold start. If the home node is changed during a hot start with refresh and the XCFGRPNM parameter is not specified, the value of XCFGRPNM that was determined from the home node definition during the last warm or cold start remains in effect.

Syntax

```
►►──OPTIONS──┬──────────────────────────────┬──┬──────────────────────────┬──►
             └─,DUMP=──┬─JES──┬──┬─MVS──┬──┘  └─,DUPJOBNM=──┬─NO───┬──┘
                       └─MVS──┘  └─PRDMP─┘                   └─YES──┘

►──┬──────────────────────────┬──┬──────────────────────────────────────────►
   └─,SDI=──┬─OFF──┬──┬─ON───┬──┘  └─,DUMPLINS=──┬─24576──┬──┘
            └─ON───┘  └──────┘                   └─nnnnnn─┘

                                 ┌─3──────┐                 ┌─10─────┐
                   ┌─YES──,LIMIT=──┬─limit──┬──,INTERVAL=──┬─interval─┬──┐
►─,WANTDUMP=──┬────┼──────────────┴─0──────┘              └─0────────┘  │
              └─NO─┴──────────────────────────────────────────────────────┴──►
              └─ASK──────────────────────────────────────────────────────┘

►──┬──────────────────────────────────────────────────────────────────────►
   └─,INTRDR=──┬─YES──┬──┬──────┬──┬─20──┬──┬
               └──────┘  └─NO───┘  └─nnn─┘  │
                         └─ASK──┘           │

►──┬──────────────────────────────────────────────────────────────────────►
   └─,JOBNO=──(──┬─1──────┬──,──┬─9999───┬──,──┬─9999───┬──)──┬
                 └─lowest─┘     └─highest─┘     └─joblim─┘     │

►──┬──────────────────────────┬──┬──────────────────────┬──┬──────────────►◄
   └─,MT=──┬─OFF──┬──┬─ON───┬──┘  └─,SE=──┬─10─┬──┘  └─,XCFGRPNM=groupname─┘
           └─ON───┘  └──────┘             └─nn─┘
```

Parameters

DUMP=

Indicates the type of MVS system dump to be taken in the event of an abnormal termination of JES3 or program check. The JES3 control blocks, if written, are formatted and always written to the JESABEND data set.

PRDMP

Specifies that a dump of main storage is to be written to the MVS SYS1.DUMPxx data set. To print this dump, use the MVS interactive problem control system (IPCS).

MVS

Specifies that the MVS system dump written to the SYSUDUMP or SYSABEND data set contains the MVS nucleus and SQA as well as the MVS JES3-related control blocks and JES3 region.

JES
Specifies that the MVS system dump written to the SYSUDUMP or SYSABEND data set contains only the MVS JES3-related control blocks and JES3 region.

If you specify an invalid subparameter, JES3 uses the parameter default.

DUPJOBNM=
Indicates whether or not multiple batch jobs with the same name can be active in the MAIN SE.

YES
Specifies that multiple batch jobs with the same name are allowed to be scheduled for MAIN.

Use the Modify command, `*MODIFY,Q,DUPJOBNM=` , to change the value. The result of the command is checkpointed which effectively overrides the parameter until the next warmstart, coldstart or hotstart with refresh. See *z/OS JES3 Commands* for a detailed description of the command.

NO
Specifies that only one batch job of a certain name may be active in MAIN. DUPJOBNM=NO is the default keyword value.

If you specify an invalid subparameter, JES3 uses the parameter default.

SDI=
Indicates whether or not spool data integrity checking is used.

ON
Indicates that spool data integrity checking is done. This checking includes all allocations and unallocations on the spool and all write requests issued by the JES3 global.

Spool data integrity checking keeps track of all track groups and who allocated them. A table containing an entry for each track group on spool is built in the JES3 private area during JES3 initialization. Each entry in the table will contain the ″VALID″ field from the Track Allocation Table (TAT) containing the track group.

As new track groups are allocated, the table is updated along with the corresponding TAT. As tracks are purged, the ″VALID″ fields from the table and the TAT are compared to make sure that the track group really came from that TAT.

Additionally, each WRITE for a JES3 Single Record File (SRF) record is verified. All JES3 SRF control blocks are identified by the same ″VALID″ value as is the corresponding TAT containing the track group to which the record is being written. For updates, the ″VALID″ field is compared to the ″VALID″ field from the TAT (if any was specified) passed in to the AWRITE function. If a mismatch is found, the write request is abnormally ended.

The size of the ″VALID″ table can be determined by multiplying the largest number of track groups found for a spool volume and the number of spool volumes. Multiplying the result by four will yield the size of the table in bytes. To find the largest number of track groups, you can use the *I,Q,DD=ALL command.

OFF
Indicates that spool data integrity checking is not done.

The Modify command *MODIFY,Q,SDI= can be used to change the value. The result of the command is checkpointed which effectively overrides the parameter until the next warmstart, coldstart, or hot start with refresh. For a detailed description of the command, see *z/OS JES3 Commands*.

DUMPLINS=
Specifies the maximum number of lines to be printed in a formatted dump. The maximum value allowed is 999999.

WANTDUMP=
Indicates the action taken when a JES3 failure condition occurs.

YES
Specifies that a dump should be taken when a failure occurs.

LIMIT
The maximum number of failures within the interval before JES3 temporarily changes to WANTDUMP=ASK. The acceptable value is a number between 2 and 10 or a zero. The default value is 3. Zero (0) indicates no limit will be used.

INTERVAL
A time period, in minutes, that will be used as the basis for the limit. The interval is a sliding window that ends at the time of the latest JES3 failure. The acceptable value is a number between 2 and 60 or a zero. The default value is 10. Zero (0) indicates no limit will be used.

If you run with WANTDUMP=YES, JES3 will override it by temporarily changing to WANTDUMP=ASK if more than LIMIT failures occur within the previous INTERVAL minutes.

NO
Specifies that no dump should be taken when a failure occurs.

ASK
Specifies that, when a failure occurs, the operator is to be given the choice of specifying whether a dump is to be taken.

If you specify an invalid subparameter, JES3 uses the parameter default.

INTRDR=
Specifies the maximum number of internal readers that can be active concurrently. Specifying too high a value can cause a shortage of JSAM buffers. You can specify any value between 1 and 999 inclusive for the variable ***nnn***.

If you specify an invalid subparameter, JES3 uses the parameter default.

JOBNO=
Indicates a specific range of numbers for JES3 to assign to jobs that enter the JES3 complex. There must be at least five job numbers in this range. When the end of the range is reached, numbering resumes at the beginning of the range, skipping those numbers that are assigned to jobs still in the system. If all job numbers are assigned, JES3 suspends processing and issues a message that informs the operator that no job numbers are available. Note that JES3 can assign incoming jobs with job numbers higher than the number of jobs that input service can actually process. These jobs are pending input service, and are processed when buffers become available.

lowest
Specifies a number within the range 1 to 999999 to indicate the lowest job number. This number must be at least 17 job numbers lower than the value of 'highest' in the range.

highest
Specifies a number within the range 18 to 999999 to indicate the highest job number. This number must be at least 17 job numbers higher than the value of 'lowest' in the range.

joblim
Specifies the maximum number of jobs that may be in the JES3 complex at any given time (within the range 1 to 999999).

JES3 uses as the actual job maximum the **smaller** of the following values:

- The ***joblim*** value
- The value obtained by the calculation: highest – lowest + 1
- The number of job control table (JCT) entries that will fit in the JCT data set (*z/OS JES3 Initialization and Tuning Guide* provides information about how to determine this number).

If you lower the upper end of the job number range or increase the lower end of the job number, jobs that are in the system and were previously assigned job numbers outside the new range are lost. For example, assume you have specified 1-50 as the range of job numbers and JES3 has assigned numbers 1-35. You now change the range of job numbers to 1-30. Jobs with numbers 31-35 will be lost.

There is a way to avoid losing jobs when you change the upper end of the range using a warm start. Before making the change, execute the dump job (DJ) facility to save jobs that are in the job queue. After the change, again execute the dump job facility to restore these jobs to the job queue. See *z/OS JES3 Commands* for information about using the dump job facility.

MT=
Indicates whether JES3 is to turn the writer output multitasking facility on or off. To determine whether to turn the facility on or off, see the topic "Using the Writer Output Multitasking Facility" in *z/OS JES3 Initialization and Tuning Guide*.

ON
Requests that JES3 enable the writer output multitasking facility. Specify ON only when the global is a multiprocessor.

OFF
Requests that JES3 turn off (disable) the writer output multitasking facility. Specify OFF when the global is a uniprocessor.

If you specify an invalid subparameter, JES3 uses the parameter default.

SE=
Specifies the maximum number of scheduler elements (SEs) that may be constructed for any job. The value chosen should equal the number of scheduler elements required to support the largest job (in terms of SEs) to be run in the complex. A number between 10 and 90 may be specified. This specification is used to calculate the maximum size for a JCT and its SEs (JCT record size).

XCFGRPNM=
Each complex in a sysplex is required to use a unique XCF groupname. The groupname must follow all XCF naming conventions. It must be 1-8 alphanumeric characters including $, # and @. The default is the node name defined on the NAME= keyword on the NJERMT initialization statement for the home node (HOME=YES specified), if one exists. It is recommended that the default be used unless it conflicts with an existing XCF groupname, or your home node name is not a valid XCF group name. This default takes effect only during a warm or a cold start. During a hot start with refresh, if the home definition is changed, the value of XCFGRPNM from the last warm or cold start remains in effect.

Example

In the following example, the numbers 1 to 20000 would be assigned to JES3 jobs, no more than 12000 jobs could be in the JES3 complex at any given time (assuming the size of the JCT data is large enough to accommodate 12000 jobs), the multitasking facility would be off, and the maximum number of scheduler elements would default to 10. In the event of an abnormal termination or program check, a dump of MVS JES3-related control blocks and the JES3 region will be written to the SYSUDUMP or SYSABEND data set. The formatted JES3 control blocks will be written to the JESABEND data set:

```
OPTIONS,JOBNO=(1,20000,12000)
```

OUTSERV (Output Service Defaults and Standards)

The OUTSERV initialization statement specifies default values and standards for the output service element (OSE) to be used on output devices; for example: printers, punches, or RJP (remote job processing). These defaults apply to every built OSE, regardless of the device that handles the output, provided other overrides do not take effect. For more information about override sequences for output data sets, see *z/OS JES3 Initialization and Tuning Guide*.

Statement Summary

Table 47. OUTSERV Summary

Required/Optional Statement	Optional

Statement Default	`OUTSERV,CARRIAGE=6,CB=N,CDSTOCK=5081,`
	`CHARS=GS10,FLASH=(NONE,255),FORMS=1PRT,`
	`MODIFY=(NONE,0),OUTLIM=16777215,`
	`OUTSVFCT=1,STACKER=C,TRAIN=PN,THRESHLD=-1,`
	`WS=(D,T,F,C,U,FL,CM,SS,PM),NPRO=90,`
	`SNAGROUP=NO`

Placement in Initialization Stream	This statement must follow the ENDJSAM statement.
Coding Considerations	When any of the following parameters are specified, printed output is scheduled only for 3800 printers. • The FLASH and WS=FL parameters • The MODIFY and WS=CM parameters • The STACKER=S and WS=SS parameters

Table 47. OUTSERV Summary (continued)

Security Usage	Use the FLASH parameter to print security classifications on 3800 output. Do not confuse the FLASH security classifications with RACF security labels which can also be printed on job output. If you are using both FLASH and RACF to print security classifications, ensure that their meanings agree and that you do not overlay the security label printed by PSF.
Performance Considerations	None
Initialization Stream Overrides	None. However, for information about output service overrides, see *z/OS JES3 Initialization and Tuning Guide*.
Restart or Command Modification	• Hot start with refresh for all parameters.

Syntax

```
►►──OUTSERV──┬──────────────────────────────────────────────────────────────────────────────────────►
             └─,CARRIAGE=──┬─6──────────┬──┬──────────────────────────────────────────────────────►
                           └─taptename──┘  └─,CB=──┬─N─┬──────────────────────────────────────────►
                                                   ├─J─┤
                                                   └─D─┘
►──┬──────────────────────────────────────────────────────────────────────────────────────────────►
   └─,CDSTOCK=──┬─5081────┬──┬──────────────────────────────────────────────────────────────────►
                ├─stocnum─┤  │
                └─stocnam─┘  └─,CHARS=──┬─GS10──────────────────────────────────────────────────►
                                        │          ┌──────┐
                                        └─(──┬─idn──┴─,──┬─)──┘
►──┬──────────────────────────────────────────────────────────────────────────────────────────────►
   └─,FLASH=──(──┬─NONE─┬──,──┬─255──┬─)──┬──────────────────────────────────────────────────►
                 └─name─┘     └─count─┘   │
                                          └─,FORMS=──┬─1PRT────┬──┬──────────────────────────►
                                                     └─prntform─┘  │
►──┬──────────────────────────────────────────────────────────────────────────────────────────────►
   └─,MODIFY=──(──┬─NONE─┬──,──┬─0─┬─)──┬──────────────────────────────────────────────────►
                  └─id───┘     ├─1─┤    │
                               ├─2─┤    └─,OUTLIM=──┬─16777215─┬──┬──────────────────────────►
                               └─3─┘                └─limit────┘  │
►──┬──────────────────────────────────────────────────────────────────────────────────────────────►
   └─,OUTSVFCT=──┬─1──┬──┬──────────────────────────────────────────────────────────────────────►
                 └─nn─┘  │
                         └─,SNAGROUP=──┬─NO──┬──┬──────────────────────────────────────────────►
                                       └─YES─┘  │
                                                └─,STACKER=──┬─C─┬──┬──────────────────────────►
                                                             └─S─┘  │
►──┬──────────────────────────────────────────────────────────────────────────────────────────────►
   └─,TRAIN=──┬─PN────┬──┬──────────────────────────────────────────────────────────────────────►
              ├─ANY───┤  │
              └─train─┘  └─,THRESHLD=──┬─-1──────┬──┬──────────────────────────────────────────►
                                       └─limit───┘  │
                                                    └─,WC=──┬─────────┬──┬──────────────────────►
                                                            │    ┌────┐
                                                            └─(──┬─c──┴─,──┬─)──┘
►──┬──────────────────────────────────────────────────────────────────────────────────────────────►◄
   └─,WS=──┬─D,T,F,C,U,FL,CM,SS,PM─┬──┬──────────────────────────────────────────────────────►
           ├─CL,L,P───────────────┤  │
           │          ┌────┐       │  └─,NPRO=──┬─90───┬──┬──────────────────────────────────►
           └─(──┬─c──┴─,──┬─)──────┘            ├─NO───┤  │
                                                 └─nnnn─┘  │
```

Parameters

CARRIAGE=
Indicates the specific name (1-to-8 characters) or the number of characters in the name of the printer carriage tape that is to be the installation standard. For 3211 printers the FCB module, which must be included in SYS1.IMAGELIB, is named FCB2, plus the first 4 characters of the carriage tape name. For 3800 printers the FCB module is named FCB3, plus the first 4 characters of the carriage tape name. For more information about SYS1.IMAGELIB, see *Data Management*.

Note: If you are using the user exit IATUX23 and you are coding FCBs for use with JES3 defined printers that are other than 3800, then you must code a CHANNEL 12 in the FCB.

CB=
Specified for the 3800 printer only. This parameter specifies when the device's buffer is to be cleared. The buffer is cleared by the clear printer channel command.

D Indicates that the data set option is to be used. This causes output service to issue a clear-print channel command at the end of each data set. This causes a short pause at the end of each data set.

J Indicates that the job option is to be used. This causes output service to issue a clear-printer channel command only at the end of each job. This causes a short pause at the end of each job.

N Indicates that the device's buffer is not to be cleared unless required by a function. Maximum performance is obtained with CB=N. Examples of functions that require a clear printer command are:
- Loading new characters
- Requesting operator setup
- Waiting for work

When the device is in manual mode (M specified on *X, *R, or *S and M is specified in message IAT8562), a clear printer command is issued before each data set and CB has no effect.

If you specify an invalid subparameter, JES3 uses the parameter default.

CDSTOCK=
Indicates the stock name (1-to-8 characters) or stock number of the cards to be considered the installation standard. This parameter is analogous to the FORMS parameter for printer output.

CHARS=
Specifies the 1-to-4 character name(s) of the image to be set up on the printers that support character sets. Up to four names can be specified.

This parameter specifies default information for the OSE that can be used on printers that support character sets (for example, AFP printers).

The parameter default is GS10.

FLASH=
Specifies the name (1-to-4 characters) of the forms flash cartridge to be used on the 3800 printer.

name
Specifies the name of the standard forms flash cartridge; the subparameter default is NONE.

count
Specifies the standard flash count. If NONE is specified, then this subparameter should not be specified. If FLASH=name is specified and the count subparameter is not specified, then 255 is the default.

FORMS=
Specifies the name of the printer forms (1-to-8 alphanumeric or national characters) to be considered the installation standard. This parameter is analogous to the CDSTOCK parameter for punched output.

MODIFY=
Specifies the module identifier and reference character to be used as the standard copy modification option for the 3800 printer.

id Specifies the name of the copy modification module to be used (one to four characters).

NONE
Specifies that the copy modification option is not being used.

0,1,2,3
Specifies the table reference character to be used with the copy modification option.

OUTLIM=
Specifies the default record limit for a SYSOUT data set. When this limit is exceeded, the installation SMF exit is entered. Upon return from the SMF exit, the job is either canceled or a new limit is used. The value of limit must be from 1 to 16777215. For more information concerning SMF exits, see *z/OS MVS Installation Exits*.

If you specify an integer greater than the maximum allowable, JES3 uses the parameter default. If you specify a negative integer or a non-numeric character, JES3 issues message IAT3245 and initialization terminates.

If you specify an invalid subparameter, JES3 uses the parameter default.

OUTSVFCT=
Specifies the number of OUTSERV FCTs that are available to process jobs from the output service queues. The valid values for OUTSVFCT are 1 to 10. The default is one.

Defining more than one FCT allows output service to process multiple jobs simultaneously and prevent bottlenecking. IBM recommends that you specify at least three OUTSERV FCTs.

SNAGROUP=
Specifies whether JES3 groups DSISO datasets destined for SNA/NJE nodes.

YES
Specifies that JES3 group DSISO data sets, if possible, which are destined for SNA/NJE nodes. Specifying YES allows the receiving node to assign a single job number to a group of datasets that were produced by one job at the originating node.

Specifying SNAGROUP=YES also causes JES3 to always group non-spinoff DSISO datasets (TYPE=DSISO specified on the SYSOUT initialization statement for the SYSOUT class). However, spinoff data sets, such as those

produced by specifying FREE=CLOSE in the JCL, are sent separately because they are sent when the dataset is closed rather than at the end of the job.

Attention: Specifying SNAGROUP=YES prevents JES3 from releasing spool space used for DSISO datasets until all of the job's datasets have been sent to the specified node.

NO
Specifies that JES3 send DSISO datasets destined for SNA/NJE nodes as separate data sets. Specifying SNAGROUP= NO allows JES3 to release spool space as soon as a dataset is sent.

STACKER=
Specifies which stacker option is to be standard for a 3800 printer.

C Specifies that output is to be placed in the continuous forms stacker. If no 3800 described as BTS feature, STACKER=C is forced by initialization.

S Specifies that output is to be placed in the sheet stacker, where offset stacking is automatically performed.

If you specify an invalid subparameter, JES3 uses the parameter default.

TRAIN=
Indicates the installation standard printer train or band.

train
Specifies the name (1 to 4 characters) of a specific printer train or band to be used as the installation standard.

ANY
Specifies that any printer train or band that is mounted is acceptable, provided the printer can otherwise fulfill processing requirements.

PN
Specifies the PN Printer train.

THRESHLD=
Specifies the default maximum size for a SYSOUT data set. The maximum value that may be specified is 99999999. THRESHLD=-1, which is the default, indicates that no threshold processing is in effect. This parameter is used by output service to build and queue OSEs for writers. The THRESHLD parameter assumes that the data set size is the number of records in the data set multiplied by the number of copies. Data sets that equal or exceed the value specified are queued as separate piece of work for output service writers.

A job that has work created in this manner is eligible to be concurrently processed by several output service writers that have the same processing characteristics. Normally, similar pieces of work for a job are assigned to the same writer. This parameter should be used when the user wants to permit concurrent printing or punching of multiple copies of data sets or a large volume of data sets for a job on several output service writers. This parameter is ignored when the copy distribution for a data set is 3000 or more.

Example: Job ABC generates three SYSOUT data sets with similar processing characteristics (such as same forms, carriage). Assume that data set A is 3000 records and the user needs 2 copies; data set B is 10000 records and the user needs 1 copy; data set C is 1000 records and the user wants 10 copies.

If the THRESHLD for the job is 20,000, then the first writer to select the job is assigned all three data sets.

If the THRESHLD for the job is 10000, then the first writer to select the job is only assigned data set A. Data sets B and C are eligible for selection by another writer.

WC=
Specifies the writer classes. This parameter indicates SYSOUT classes in the order they are processed by the output service writers. Data sets for a class not specified will not be selected. The value of c specifies a valid SYSOUT class (A-Z, 0-9) that appears as a SYSOUT parameter on a DD statement. If a list of classes is specified, separate each class by a comma.

This parameter is effective only for writers that have a writer selection list that includes CL, the SYSOUT class. The list could have been specified explicitly or by default.

JES3 uses a null list as the parameter default and selects data sets, regardless of class, to be processed by output service writers.

WS=
Specifies the writer selection criteria. The value of c indicates the items JES3 output service checks, in order of importance, when selecting a data set for output processing. (These WS parameter values remain in effect over a hot start.) Specify the selections in order of importance and separate specifications with a comma.

Selection Character

	Meaning
C	Carriage tape or FCB (printers only)
CL	SYSOUT class
CM	Copy modification (3800 printer only)
D	Data set destination
F	Forms requested
FL	Flash (3800 printer only)
L	Limit scheduling (line, page or record)
SS	Stacker (3800 printer only)
P	Data set priority
PM	Processing mode
T	Specific device type requested
U	Train image UCS (3525 printer or 3800 character arrangement)

All the selection characters are valid for printer output. C is not valid for punched output.

Attention: JES3 does not take any action (such as issue mount messages or load FCB and UCS) if you omit printer and punch setup characteristics on this parameter. For example, a job that requires special forms may print on the wrong form if you omit forms as a selection criterion.For additional information on the relationship of the WS= settings to the JCL of your installation job workload, see Appendix A, “Work Selection for JES3” on page 219.

NPRO=
Specifies the non-process run-out interval for a channel-attached AFP printer.

nnnn
Specifies the number of seconds the printer will wait for more data before forcing out the already-printed pages. The value specified must be between 0 and 9999, inclusive.

NO
Specifies that the run-out interval will not be used for this printer.

If you specify an invalid subparameter, JES3 uses the parameter default.

Example

This example specifies default values and standards for printers and punches as follows:

- The carriage tape name is 6
- The writer selection criteria are, in order of importance, data set priority (P), SYSOUT class (CL), processing mode (PM), limit scheduling (L), and data set destination (D)
- The run-out interval is 75 seconds

All other parameters use their default values.

```
OUTSERV,CARRIAGE=6,WS=(P,CL,PM,L,D),NPRO=75
```

RESCTLBK (Resident Control Block)

Use the RESCTLBK initialization statement to preallocate storage for the highly used JES3 function control table (FCT) entries.

Statement Summary

Table 48. RESCTLBK Summary

Required/Optional Statement	Optional
Statement Default	`RESCTLBK,FCT=0`
Placement in Initialization Stream	This statement must follow the ENDJSAM statement.
Coding Considerations	None
Security Usage	None
Performance Considerations	Using the RESCTLBK can reduce GETMAIN overhead and the associated paging overhead.
Initialization Stream Overrides	None
Restart or Command Modification	Cold start, warm start, or hot start with refresh for all parameters.

Syntax

```
►►──RESCTLBK──┬──────────────────────┬──────────────────────────────────────►◄
              │              ┌─0───┐  │
              └─,FCT=────────┴─nnn─┘──┘
```

Parameters

FCT=
Indicates the number of FCT entries to be preallocated. The value of nnn can be from 1 to 999. When determining the nnn value consider:
- One FCT entry per active JES3 DSP

- Each FCT entry is 600 bytes long

If you specify an invalid subparameter, JES3 uses the parameter default.

Example

In the following example, enough FCT entries are preallocated for 30 DSPs. After 30 DSPs are active, JES3 allocates more FCT entries as they are required.

```
RESCTLBK,FCT=30
```

RESDSN (Resident Data Set Names)

Use the RESDSN statement to name permanently resident data sets for which JES3 is to bypass setup processing. JES3 bypasses setup processing whenever the named data sets appear as cataloged references (no UNIT or VOLUME parameters are specified) on the DD statement of a job.

Statement Summary

Table 49. RESDSN Summary

Required/Optional Statement	Optional
Statement Default	None
Placement in Initialization Stream	This statement must follow the ENDJSAM statement.
Coding Considerations	1. You cannot continue the RESDSN statement. If the dsname subparameters will not fit on one statement, specify the remaining subparameters on another statement. 2. JES3 provides no data set integrity checking for data sets that appear on a RESDSN statement. 3. JES3 does not check dynamically allocated data sets against the names specified on the RESDSN statement. To bypass integrity checks for a dynamically allocated data set, use the DYNALDSN statement. 4. JES3 does not perform data set integrity processing for resident data sets. Therefore, do not specify data sets as resident unless the data set can be accessed from only one main or unless the user provides data set integrity. MVS provides dataset integrity when a resident data set can be accessed from only one main.
Security Usage	None
Performance Considerations	None
Initialization Stream Overrides	None
Restart or Command Modification	• Warm start or cold start for all parameters. • Hot start with refresh for all parameters. When you change the RESDSN statement, you should restart any C/I FSS that is active to incorporate the change.

Syntax

```
►►──RESDSN──DSN=──(──dsname──┬──────────┬──)──────────────────────────────►◄
                             ▲ ,        │
                             └──dsname──┘
```

Parameters

DSN=
Specifies the names of permanently resident data sets for which JES3 is to bypass setup processing.

Example

The following example shows how to specify the data set names when they will not fit on one RESDSN statement.

```
RESDSN,DSN=(SYS1.PROCLIB,SYS1.MONTY.SIATLINK,SYS1.MACLIB)
RESDSN,DSN=(SYS1.SHIPPER.SIATLIB,SYS1.SVCLIB)
```

RJPLINE (BSC Remote Job Processing Line)

Use the RJPLINE initialization statement to define the characteristics of a single BSC line (and its respective adapter) that will be used by the JES3 global for remote job processing. You can also use this statement to assign a specific RJP work station, defined by the N parameter of an RJPTERM statement, to this line.

Statement Summary

Table 50. RJPLINE Summary

Required/Optional Statement	Optional
Statement Default	None
Placement in Initialization Stream	This statement must follow the ENDJSAM statement.
Coding Considerations	1. One RJPLINE statement is required for every adapter to be accessed by RJP. For further information about RJP, see the RJP description in *z/OS JES3 Initialization and Tuning Guide*. 2. The T parameter on this statement must match the N parameter on an RJPTERM statement and the JNAME parameter on a CONSOLE statement.
Security Usage	Use the password parameter (P) to specify a password used to protect the RJP line. This password must be used by any work station attempting to sign on to the defined line.
Performance Considerations	None
Initialization Stream Overrides	None
Restart or Command Modification	Cold start, Warm start, or hot start with refresh for all parameters.

Syntax

```
►►──RJPLINE──,N=linename──,A=──┬──/devnum──┬──┬──────────┬──┬──────────┬──►
                               └──devnum───┘  └─,F=DIAL───┘  └─,F=NTRS───┘
```

```
►──┬──────────────┬──┬──────────┬──┬──────────┬──┬──────────┬──┬──────────────┬──┬──────────────┬──►
   └,G=grpname────┘  │          │  │          │  └,O=AUTO────┘  └,P=password────┘
                     └,I=──┬─A─┬──┘  └,I=──┬─Y─┬──┘
                           └─B─┘            └─N─┘

►──┬──────────────┬──┬──────────────┬──────────────────────────────────────────────────────────►◄
   │          ┌2400──────┐          │
   └,S=───────┴linespeed──┘          └,T=termname────┘
```

Parameters

N=
Required to specify the name for this line up to 8 characters. It must be different from the N parameter of the RJPTERM statement.

A=
Specifies a device number (by 3-digit or 4-digit hexadecimal number). A slash (/) preceding the device number is not required. Device numbers can be specified by any of the following formats:

```
ddd
dddd
/ddd
/dddd
```

ddd and dddd represent the device numbers.

F= Used to indicate a dial feature for this line (DIAL) and/or the absence of a transparency feature for the line (NTRS). If both DIAL and NTRS are selected, both F parameters are specified, as shown previously.

In dedicated or leased line environments, transparency feature is assumed on terminals on this line if you omit this parameter.

DIAL
Indicates that the line is a switched line. Do not specify F=DIAL if the line is to be used for the transmission of output restricted to authorized remote terminals. If not specified, a dedicated (or leased) line is assumed.

NTRS
Indicates that the line does not have the transparency feature; if not specified, the transparency feature is assumed.

G=
Indicates a line group name of up to 8 characters, which associates several lines. If you omit this parameter, eight blanks (no group name) are used.

I= Indicates the 1-character line interface.

A Refers to the first or only interface of the BSC communications adapter.

B Refers to the second interface of a BSC communications adapter having the dual communications interface feature.

If you specify an invalid subparameter, JES3 uses the parameter default.

I= Specifies the mode of operation.

Y Specifies the interrupt mode of operation.

N Specifies the noninterrupt mode of operation.

If you specify an invalid subparameter, JES3 uses the parameter default.

O=
Indicates the line option to have the RJP line start automatically; the *START operator command is not required. If you omit this parameter, you must start the line manually using a JES3 *START command.

P= Provides password protection for this line. Password defines a line password up to 8 characters. This password must be used by any work station attempting to sign on to this line. If you omit this parameter, JES3 provides no password protection for this line.

S= Specifies a line baud rate up to 6 characters. If you specify an invalid subparameter, JES3 uses the parameter default.

T=
Indicates a terminal to be assigned to this line. If this parameter is included, a /*SIGNON card must not be used. T specifies the name (up to 5 characters) of a nonprogrammable terminal. This name must also appear in the N parameter of an RJPTERM statement and JNAME parameter of a CONSOLE statement. The T parameter must not be specified when F=DIAL is specified.

Examples

Example 1: In the following example, the LINE01 is defined as having an adapter address 001, without the dual communications interface feature. The line is a 50K BPS leased line with transparency. It will be automatically started when RJP is called. No password is assigned to LINE01.

```
RJPLINE,N=LINE01,A=001,S=50000,O=AUTO,T=FUL50
```

Example 2: In the following example, LINE002B is defined as having an adapter address 002, with the second interface of the dual communications interface feature. It is a switched 2400-BPS line with transparency. The line must be started by the operator after RJP is called. Note that if another line specifies the same dual interface feature on line adapter 002, it cannot be active (started) concurrently on this line. Work stations must use the password, SECRET, to sign onto the line.

```
RJPLINE,N=LINE002B,A=002,I=B,F=DIAL,S=2400,P=SECRET
```

Example 3: In the following example, LINE01 is defined as adapter address 001, interface A. It is a 4800-BPS line with transparency. The line will be automatically started when RJP is called, and the work station named T2780 will be automatically signed on to it. No password is assigned to LINE01.

```
RJPLINE,N=LINE01,S=4800,O=AUTO,T=T2780,A=001
```

RJPTERM (BSC Remote Job Processing Terminal)

Use the RJPTERM initialization statement to define a single remote BSC work station to the JES3 system. This statement causes a default description to be provided for each work station device (printer, punch, or card reader) indicated by the PR, PU, or RD parameters along with the operating characteristics of the work station. If the JES3 default characteristics for a remote printer or punch device are not acceptable, a DEVICE statement should be coded to indicate desired characteristics. If a work station is to have the facilities of a JES3 operator console, then a CONSOLE statement must be coded. Figure 1 shows the DEVICE statement defaults and the RJP DEVICE parameters. Table 52 shows the RJP parameters on the CONSOLE statement.

Statement Summary

Table 51. RJPTERM Summary

Required/Optional Statement	Optional
Statement Default	None
Placement in Initialization Stream	This statement must follow the ENDJSAM statement.
Coding Considerations	1. Use the CONSOLE statement to define console support at a remote work station. 2. Use the DEVICE statement to define remote printers and punches. (A DEVICE statement must not be specified for remote devices other than printers and punches.)
Security Usage	You can specify a SIGNON password using the P parameter. This password must be specified on the /*SIGNON statement used to establish a BSC RJP session. This parameter is ignored when RACF is used to control RJP logon passwords.
Performance Considerations	None
Initialization Stream Overrides	None
Restart or Command Modification	Cold start, warm start, or hot start with refresh all parameters.

Syntax

```
►►──RJPTERM──,N=linename──,T=termtype──┬──────────────────────────┬──┬──────────────┬──►
                                       │          ┌─400/512─┐     │  │   ┌─R─┐      │
                                       └─,B=──────┴─buffsiz──┘     │  └─,C=──┴─S─┘    │

►──┬──────────┬──┬──────────┬──┬──────────┬──┬──────────┬──┬──────────────┬──►
   └─,F=HTAB──┘  └─,F=NTRS──┘  └─,F=PRES──┘  └─,F=XBUF──┘  └─,G=grpname──┘

►──┬──────────┬──┬──────────┬──┬──────────────────────┬──┬──────────┬──►
   └─,O=AUTR──┘  └─,O=FBIX──┘  │          ┌─DC3─┐     │  └─,O=CCNT──┘
                               └─,O=──────┴─DC2─┘     │

►──┬──────────────────────┬──┬──────────────────────────┬──►
   │          ┌─0───────┐  │  │          ┌─132──────────┐  │
   └─,PR=─────┴─numofprt──┘  │  └─,PRW=────┴─recsiz,NOTRUNC┘  │

►──┬──────────────────────┬──┬──────────────────────┬──►
   │          ┌─0───────┐  │  │          ┌─80────┐  │
   └─,PU=─────┴─numofpun──┘  │  └─,PUW=────┴─recsiz─┘  │

►──┬──────────────────────┬──┬──────────┬──┬──────────────┬──┬──────────────────┬──►◄
   │          ┌─0───────┐  │  └─,P=password──┘  │   ┌─Y─┐      │  │   ┌─N─┐      │
   └─,RD=─────┴─numofrdr──┘  │                    └─,CS=──┼─B─┼──┘  └─,SET=──┼─Y─┼──┘
                             │                            └─N─┘               ├─V─┤
                             │                                               └─B─┘
```

Parameters

Parameter	Default (By Device Type)	
	Printer	Punch
FORMS	YES,STANDARD	YES,STANDARD
CARRIAGE	YES,STANDARD	N/A
TRAIN	NO,STANDARD	N/A
XLATE	YES	N/A
BURST	YES	YES
HEADER	YES	YES
LINELIM	0+	0+
PAGELIM	0	0
PRMODE	LINE	LINE
DYNAMIC	YES	YES

Parameter	Usage
DTYPE=(RMT1403) or (RMT3211)	Required (Note 1)
JNAME	Required (Note 2)
FORMS	Optional (Note 3)
CARRIAGE	Optional
TRAIN	Optional
XLATE	Optional
BURST	Optional
HEADER	Optional
DYNAMIC	Optional
LINELIM	Optional
PAGELIM	Optional
PRMODE	Optional
JUNIT	Optional (Notes 3 and 4)
DGROUP	Ignore (Note 5)
XTYPE	Ignore
XUNIT	Ignore

Notes:

1. The DTYPE must be specified, and the first characters must be RMT. If remote printer FCB loading is desired, specify 3211 as the last 4 characters; any characters other than 3211 in the last positions will be ignored.
2. The JNAME consists of an 8-character name, where characters 1 through 5 are the terminal name, characters 6 and 7 are PR or PU (for the device type), and the 8th character is a single digit (1 through 7). This digit must correspond to the device number specified during remote generation for the device being referenced.
3. “Optional” indicates that the parameter may or may not be coded.
4. The JUNIT parameter is meaningful for RJP printers and punches only for setting the device initially online or offline. If this parameter is omitted, the default setting is ″initially online″. When JUNIT is specified, you should specify a device number of NONE or code a ″null″ value as a place holder. The destination class is ignored.
5. “Ignore” indicates that the parameter has no meaning for remote devices, and will be ignored.

Figure 1. DEVICE Statement Defaults and Associated Parameters

Table 52. CONSOLE Statement Parameters Associated with RJPTERM

Parameter	Default	Usage
TYPE=RJP		Required (Note 1)
JNAME=terminal name		Required
DEST (Note 2)		Required
LEVEL	00	Optional (Note 3)
LL	120/PRW=	Optional
MAIN		Rejected
UNIT		Rejected

Notes:
1. "Required" indicates that this parameter must be specified.
2. Destinations MLG, OUTPUT, or TOTAL should not be routed to a remote console.
3. "Optional" indicates that this parameter may be coded if the default is not acceptable.

N=

Required to indicate the name for this work station. This name must be 5 characters and cannot be the same as an N parameter specified on an RJPLINE or RJPWS statement.

Note: IBM recommends that a TSO userid should not have the same name as an RJP workstation, group name, or device. This avoids ambiguity when routing inbound SYSOUT data sets.

T=

Indicates a 4-character identifier specifying the type of work station. The valid types for this parameter are:

ID	Work Station
1130	1130 processor terminal
2770	2770 nonprogrammable terminal
2780	2780 nonprogrammable terminal
2922	2922 programmable terminal
3741	3741 nonprogrammable terminal. (See "3741 Restrictions and Limitations" on page 168 for additional information.)
3747	3747 nonprogrammable terminal
3780	3780 nonprogrammable terminal
M202	System/360, Model 20, Submodel 2, processor terminal
M205	System/360, Model 20, Submodel 5, processor terminal
S360	All System/360 Model 22 and above processor terminals
S370	All System/370 programmable terminals
SYS3	System 3, Model 10, processor terminal

In specifying termtype, the following terminals are specified as 2770s: 3771, 3772, 3773, 3774, and 3775. The 3776 and 3777-1 are specified as 3780s. The 3777-2 is specified as M205.

The value of the T parameter determines the default value for the C and B parameters.

B=

Indicates the terminal buffer size in bytes. The value specified can be up to 4

numeric characters. For programmable terminals, the bufsize must correspond to the work station package. For nonprogrammable terminals, the default buffer value is used.

The default value for B is determined by the T parameter as shown below:

T Parameter	B Default
1130	400
2770	512
2780	400
2922	400
3741	512
3747	512
3780	512
M202	400
M205	400
S360	400
S370	400
SYS3	400

For fixed buffer size devices, such as the 2780, the B parameter is forced to 400. If F=XBUF is specified, then B defaults to 256.

C=

Indicates the type of console support for this work station. If the C parameter is specified, a CONSOLE statement should be specified also. If you omit a CONSOLE statement for this work station, a default JES3 message destination class of TP (teleprocessing) is assigned to the console. If a CONSOLE statement is found and the C parameter is not specified, then the default value for C is assumed.

R Applies to programmable terminals only. This subparameter indicates the presence of a real console.

S Applies to both programmable and nonprogrammable terminals. This subparameter specifies that regardless of any real console attached to this work station, the printer designated as PR1 is to be used as a simulated console output device.

If S is specified for a programmable terminal that has a real console, that console can still be used to enter console commands. However, all console output will be directed to the printer.

Parameter Default: The default value for C is determined by the T parameter as follows:

T Parameter	C Default
1130	R
2770	S
2780	S
2922	R
3741	S
3747	S
3780	S
M202	R
M205	R
S360	R
S370	R
SYS3	R

F=HTAB
Specifies that this terminal has the printer horizontal format control feature. This parameter is used to indicate a 2770, 2780, or 3780 with the horizontal format control feature.

If you omit this parameter, JES3 assumes that the terminal does not have this feature.

F=NTRS
Specifies that the terminal transparency feature is not present on this terminal.

If you omit this parameter, JES3 assumes that the terminal has the transparency feature.

F=PRES
Specified for a nonprogrammable terminal only, to indicate the blank compression/expansion feature for that terminal.

If you omit this parameter, JES3 assumes that the terminal does not have this feature.

F=XBUF
Specifies that a 2770 terminal has the extended buffer feature, that a 2780 terminal has the multirecord feature, or that a 3740 has the expanded communications feature. For a 2770, the B parameter must be specified large enough to incorporate this feature.

If you omit this parameter, JES3 assumes that the terminal does not have this feature.

G=
Used for the groupname facility. This parameter associates this work station with a groupname. The groupname specified may be up to 8 characters.

If you omit this parameter, JES3 uses the terminal name specified in the N parameter.

O=AUTR
Indicates a work station option that provides the JES3 automatic call reader function in the local system. If the T parameter identifies a nonprogrammable terminal, this option is assumed; the O=AUTR parameter does not have to be specified.

O=BFIX
Indicates a work station option which specifies that the output buffers used by RJP must be dedicated, that is, obtained at OPEN time and freed at CLOSE.

O={DC2|DC3}
Indicates the punch select character to be used for remote 2770 or 3780 terminals. DC2 specifies device component position 2 on the terminal. When the 3777-1 is used as a 3780, the O parameter must indicate DC2. DC3 specifies device component position 3 on the terminal.

If you specify an invalid subparameter, JES3 uses the parameter default.

O=CCNT
Specifies, for 3740 terminals, the carriage control characters that should be sent to the remote printer. If the parameter is specified, the remote operator should load program buffer A prior to initiating printing.

PR=
Indicates the number of remote printers associated with this work station. This

parameter specifies a single digit with a maximum value of 7. Nonprogrammable terminals can have a maximum of one printer.

PRW=
For programmable terminals, the value specified on the PRW parameter must not exceed the buffer size minus 16. The B parameter defines the buffer size. For nonprogrammable terminals, the value specified on the PRW parameter must not exceed the maximum print record size defined by the design of the specific printer. The component document for the printer defines the maximum print record size.

The NOTRUNC subparameter is only allowed when the PRW keyword is used for an 3700 device type. NOTRUNC specifies if trailing blanks should be sent to a D/T3780. If NOTRUNC is coded, then trailing blanks will be sent. Otherwise, trailing blanks will be suppressed.

PU=
Indicates the number of remote punches associated with this work station. This parameter specifies a single digit with a maximum value of 7. Nonprogrammable terminals can have a maximum of one punch.

JES3 will pad a blank card at the end of all punch files regardless of their punch type.

Note: JES3 pads with a blank card at the end of all punch files regardless of their punch type.

PUW=
Indicates the maximum punch card record size for remote punch devices. For programmable terminals, the value specified for recsiz must not exceed the buffer size minus 16. The B parameter defines the buffer size. If recsiz is larger than bufsiz, JES3 assumes the default, 80.

For nonprogrammable terminals, the value specified for recsiz must not exceed the maximum punch card record size defined by the design of the specific device. The component document for the device defines the maximum record size.

RD=
Indicates the maximum number of readers at this work station. This parameter specifies a single digit with a maximum value of 7. Nonprogrammable terminals can have a maximum of one reader.

P= Specifies the 1- to 8-character password of the terminal. This password must be used by any work station trying to sign on. You can also use RACF to provide BSC RJP sign on protection. The P parameter is ignored when RACF sign on protection is enabled. See *z/OS JES3 Initialization and Tuning Guide* for additional information about using RACF to provide security for BSC RJP work stations.

CS=
Specifies the type of compression, if any, that is desired. This parameter is for programmable terminals only.

Y Indicates that equal-character compression is requested for this terminal.

B Indicates that blank compression only is requested for this terminal.

N Indicates that no compression is requested.

SET=
Specifies the type of setup that is desired on remote printers.

Y Indicates that setup is required on remote printers each time a work station signs on.

N Indicates that setup is not required on remote printers when a work station signs on.

V Specifies that the work station printer automatically will go through setup procedures when varied online.

B Specifies that the work station printer automatically will go through setup procedures when varied online, or the first time accessed after a LOGON.

3741 Restrictions and Limitations

- The 3741 accepts record formats of fixed (F), fixed blocked (FB), variable (V), or variable blocked (VB). JES3, however, transmits only F or FB record formats to the 3741.
- Each logical record that JES3 transmits to a 3741 is 128 bytes long. If the 3741 has the expanded communication feature, each physical record that JES3 transmits to the 3741 contains four 128-byte logical records. Otherwise, each physical record contains one 128-byte logical record.
- Because JES3 always transmits a 128-byte logical record to the 3741, do not use data compression. If you use data compression and JES3 compresses a record to fewer than 128 bytes, JES3 will then pad that same record to 128 bytes. Therefore, data compression serves no useful purpose on a 3741.

Examples

The following examples are provided as an aid in defining an RJP work station environment. Great care should be exercised in the definition of each work station, especially for console and device definitions.

Example 1: In the following example, the work station named T3780 is defined as a 3780 nonprogrammable terminal with a 144-character printer and a card reader. The buffer size is set to 516 bytes, and the space compress/expand feature is invoked. Although the console mode is specified (C=S), no console support is provided for this work station because no CONSOLE initialization statement was supplied. The group name defaults to the terminal name T3780.

```
RJPTERM,N=T3780,T=3780,F=PRES,F=NTRS,B=516,C=S,
PR=1,RD=1,PRW=144
```

Example 2: In the following example, the work station named T2780 is defined as a 2780 nonprogrammable terminal with the multirecord and horizontal tab features installed. This work station is nontransparent, and therefore cannot send or receive object decks.

Work station devices include one printer, one punch, and one card reader. The printer width is 144 characters. Because T2780 is a nonprogrammable device, the console support mode is assumed to be simulated even though real (C=R) was specified. This means that the card reader and printer will be treated as the console input and output devices, respectively. The console authority level is 10; the default console width (equals printer width) is taken. The console has the default routing code of NONE. The group name defaults to the terminal name.

```
RJPTERM,N=T2780,T=2780,F=NTRS,F=HTAB,F=XBUF,
C=R,PR=1,PRW=144,PU=1,RD=1
CONSOLE,JNAME=T2780,TYPE=RJP,LEVEL=10,DEPTH=50
```

Example 3: In the following example, the work station named TERM2 is defined as a SYSTEM/360 having two printers, one punch, one card reader, and a console device. This work station buffer size is 600 bytes. The group name defaults to the terminal name. The console authority level is 10 and the console line width is defaulted to 120.

All devices on the work station TERM2, except PR1, are assigned JES3 default characteristics. PR1 is defined as a 3211.

```
RJPTERM,N=TERM2,T=S360,B=600,C=R,PR=2,PU=1,RD=1
CONSOLE,JNAME=TERM2,TYPE=RJP,LEVEL=10,DEST=NONE
DEVICE,DTYPE=RMT3211,JNAME=TERM2PR1
```

Example 4: The work station named FUL50 is defined as a SYSTEM/360. The work station buffer size is 800 bytes. The groupname assigned to this work station is DESIGN. It has five printers, two punches, and three card readers, as well as a real console device. The console line width is 124 characters. The console has no destination assignments, and is given an authority level of 15.

The first and second printers defined on FUL50 are 3211s. All devices attached to this work station, with the exception of PR2 and PU2, have default JES3 characteristics. PR2 may not have its forms, train, or FCB load changed. Its assumed setup is: forms (2PART7A), train (TN), and FCB load (SPDG8). JES3 header pages and burst pages will not be printed on PR2. PU2 on FUL50 may not have its forms changed, and is assumed to be setup with the forms called MICARD.

```
RJPTERM,N=FUL50,T=S360,B=800,G=DESIGN,C=R,PR=5,
PU=2,RD=3
CONSOLE,JNAME=FUL50,TYPE=RJP,DEST=NONE,LEVEL=15,
LL=124,
DEVICE,DTYPE=RMT3211,JNAME=FUL50PR1
DEVICE,DTYPE=RMT3211,JNAME=FUL50PR2,BURST=NO,
FORMS=(NO,2PART7A),TRAIN=(NO,TN11),HEADER=NO,
CARRIAGE=(NO,SPDG8)
DEVICE,DTYPE=RMT2540P,JNAME=FUL50PU2,
FORMS=(NO,MICARD)
```

RJPWS (SNA Work Station Characteristics)

Use the RJPWS initialization statement to describe each SNA work station's characteristics to the JES3 system. This statement causes a default description to be provided for each work station device (printer, punch, or card reader) indicated by the PR, PU, or RD parameter along with the operating characteristics of the work station.

Statement Summary

Table 53. RJPWS Summary

Required/Optional Statement	Optional
Statement Default	None
Placement in Initialization Stream	This statement must follow the ENDJSAM statement.

Table 53. RJPWS Summary (continued)

Coding Considerations	1. Use the CONSOLE statement to define console support at a remote work station. If you forget to define a console for the remote work station,you can use the *MODIFY,CONFIG command to add the console after JES3 initialization completes. 2. Use the DEVICE statement to define remote printers and punches. You can use the *MODIFY,CONFIG command to add additional devices to the remote work station after JES3 initialization completes. 3. If the JES3 default characteristics for a remote printer or punch device are not acceptable, you should code a DEVICE statement to indicate desired characteristics. Figure 1 on page 163 shows the DEVICE statement defaults and the RJP DEVICE parameters.
Security Usage	You can specify a LOGON password using the P parameter to be used by the work station operator. This password must be included in the user data specified on the LOGON command passed to the JES3 LOGON exit by VTAM, or JES3 will reject the LOGON. This parameter is ignored when the RACF is used to control RJP logon passwords.
Performance Considerations	None
Initialization Stream Overrides	None
Restart or Command Modification	• Cold start, warm start, or hot start with refresh for all parameters. • Use the `*MODIFY,CONFIG...` command to dynamically add SNA RJP work stations. • Use the `*MODIFY,T` command to change the AUTO, G, P PL, and TRACE parameters.

Syntax

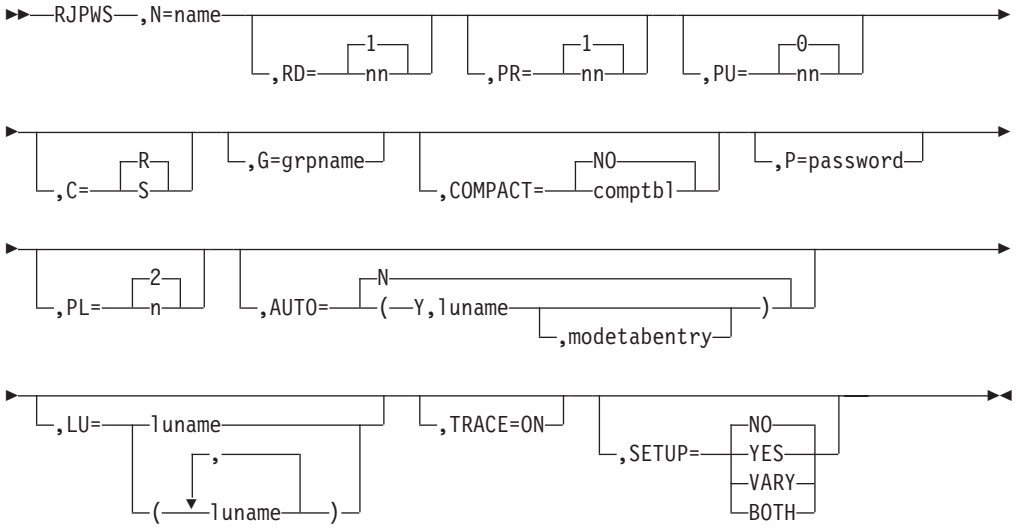

Parameters

Note: The CONSOLE statement is required when supplying an RJPWS statement.

N=
Specifies the 5-character name of the work station. This parameter cannot specify the same name specified in the N parameter on an RJPLINE or RJPTERM statement.

Note: IBM recommends that a TSO userid should not have the same name as an RJP workstation, group name, or device. This avoids ambiguity when routing inbound SYSOUT data sets.

RD=
Specifies the maximum number of work station reader units. This number must be an integer between 0 and 15.

If you specify an invalid subparameter, JES3 uses the parameter default.

PR=
Specifies the maximum number of work station printer units. This number must be an integer between 0 and 15.

If you specify an invalid subparameter, JES3 uses the parameter default.

PU=
Specifies the maximum number of work station punch units. This number must be an integer between 0 and 15.

If you specify an invalid subparameter, JES3 uses the parameter default.

Note: JES3 pads with a blank card at the end of all punch files regardless of their punch type..

C=
Specifies the type of console support for the work station.

S indicates that console and print media share the same presentation surface. JES3 never interrupts data streams to send console messages.

R indicates that the console and printer are separate real devices. JES3 interrupts data streams to send console messages.

If you specify an invalid subparameter, JES3 uses the parameter default.

G=
Used for the group name facility. This parameter associates the work station with a group name. The grpname specified can be up to 8 characters long. This name is also the default destination for any output data set from a job submitted from a work station in the group. BSC RJP and SNA RJP work stations can belong to the same group.

JES3 uses the name specified in the N parameter on this statement as the default.

COMPACT=
Specifies the name of the default compaction table to be used for the work station if the name specified on the COMPACT initialization statement is not desired. If compaction is supported by the work station session and this parameter is specified, JES3 compacts all output data sets sent to the work

station using this table unless another table is specified on the SYSOUT or //*FORMAT statement. COMPACT=NO indicates that there is no default compaction table.

P= Specifies the 1- to 8-character password to be used by the work station. This password must be included in the user data specified on the LOGON command passed to the JES3 LOGON exit by VTAM, or JES3 will not accept the LOGON. Note that the password must not contain blanks, tabs, commas, or parentheses.

You can also use RACF to provide SNA RJP LOGON protection. The P parameter is ignored when RACF sign on protection is enabled. See *z/OS JES3 Initialization and Tuning Guide* for additional information about using RACF to provide security for SNA RJP work stations.

PL=
Specifies the number of invalid LOGONs that can be attempted before the work station is rejected. Once the work station is rejected, the local operator must issue the *START or *RESTART commands to activate the work station. The number specified must be an integer from 0 to 9. If 0 is specified, there is no limit on invalid LOGONs.

If you specify an integer greater than the maximum allowable, JES3 uses the parameter default. If you specify a negative integer or a non-numeric character, JES3 issues message IAT3245 and initialization terminates.

If you specify an invalid subparameter, JES3 uses the parameter default.

AUTO=
Specifies whether automatic LOGON is supported for the work station.

(Y,luname [,modetabentry])
Indicates that automatic LOGON is supported for this work station. The luname is the name of the logical unit (LU). JES3 issues the SIMLOGON for the LU specified in luname when the JES3-VTAM interface is activated or when the local operator issues an *START or *RESTART command and an active session does not exist between JES3 and the work station. The modetabentry is the name of the mode table entry to be used for this work station. The default mode table is the first entry in the LOGMODE table for that LU.

LU=
Specifies the LU names associated with this work station as defined to VTAM. The names specified are those LUs which are permitted to LOGON as this work station. Up to 64 names can be specified.

Parameter Default: LOGONs are accepted from any LU.

TRACE=
Indicates that the SNA RJP trace facility is to be initiated during the work station LOGON process.

SETUP=
Specifies whether or not the work station printer will automatically go through setup procedures the first time it is accessed after work station LOGON.

YES
Specifies that the work station printer automatically will go through setup procedures. Do not specify SETUP=YES for unattended work stations because the system will wait for an operator response to the setup message.

NO
Specifies normal operation. The first time the printer is accessed after work station LOGON, JES3 assumes the printer is set up according to installation standards. The printer setup message will be sent to the work station operator only if a job requires special forms or features.

VARY
Specifies that the work station printer automatically will go through setup procedures when varied online.

BOTH
Specifies that the work station printer automatically will go through setup procedures when varied online, or the first time accessed after a LOGON.

Example

The following example describes a SNA work station named WS1A1. The console and printer are separate real devices, the maximum number of work station punch units is 1, the work station is associated with a group named GROUP4A, and the default compaction table for the work station is named TN.

```
RJPWS,N=WS1A1,C=R,PU=1,G=GROUP4A,COMPACT=TN
```

SELECT (Job Selection Mode)

Use the SELECT initialization statement to define scheduling controls you want associated with a particular job selection mode. The initial job selection mode is assigned to a JES3 main using the SELECT parameter on the JES3 MAINPROC initialization statement. If a MAINPROC statement does not indicate a selection mode, the SELECT statement default values are assigned to that main. Each select mode defined can be dynamically changed using the *MODIFY,G,main,S operator command. In addition, the commands *MODIFY,G,main,G or *MODIFY,G,main,C can indirectly affect the select mode. A SELECT statement must be specified for each select mode indicated on a MAINPROC statement or in a *MODIFY,G,main,S command.

Statement Summary

Table 54. SELECT Summary

Required/Optional Statement	Optional

Statement Default	JES3 assigns the following default select mode to any main whose associated MAINPROC statement does not specify the SELECT parameter:
	`SELECT,NAME=JS3BATCH,CHOICE=FFIT,LSTOR=12000,`
	`SDEPTH=255,MAGEL=14,MAGER=0,SAGEL=14,SAGER=0,`
	`SBAR=16,INCL=14,INCR=1`

Placement in Initialization Stream	This statement must follow the ENDJSAM statement.

Table 54. SELECT Summary (continued)

Coding Considerations	1. The SELECT parameter specified on a MAINPROC statement as the initial select mode must match the NAME parameter on a SELECT statement. 2. The CLASS parameter on the SELECT statement must match the NAME parameter on one or more CLASS statements. 3. The GROUP parameter on the SELECT statement must match the NAME parameter on a GROUP statement. 4. The LSTOR parameter is ignored when scheduling jobs in WLM-managed groups.
Security Usage	None
Performance Considerations	None. See *z/OS JES3 Initialization and Tuning Guide* for additional information about how the SELECT, CLASS, and GROUP initialization statements affect the processing of WLM-managed jobs and JES3-managed jobs.
Initialization Stream Overrides	None.
Restart or Command Modification	• Hot start with refresh for all parameters. • You can use the `*MODIFY,G,main,S` command to override some SELECT statement parameters.

Syntax

```
►►──SELECT──,NAME=──modename──┬──────────────────────────────────────────────────────►
                              │                (1)   ┌─FFIT─┐
                              └─,CHOICE=──────────────┤BMIX├──┘
                                                      ├─FJOB─┤
                                                      └─FMIX─┘

►──┬──────────────────────────────────────────────────────────────────────────────────►
   │                                   ┌──────────────────────────┐
   │                                   ▼                          │
   └─,CLASS=──(──┬──────┬──jobclass──┬──────────────────────┬──)──┘
                 └──/───┘            └──,jobclass───────────┘

►──┬──────────────────────────────────────────────────────────────────────────────────►
   │                                   ┌──────────────────────────┐
   │                                   ▼                          │
   └─,GROUP=──(──┬──groupnam,initnum──┬──────────────────────┬──)──┬──┘
                 │                    └──,groupnam,initnum───┘     │
                 │                                                 │
                 │   ┌──────────────────────────┐                  │
                 │   ▼                          │                  │
                 └──/groupnam──┬──────────────────────┬──────────┘
                               └──,groupnam───────────┘

►──┬──────────────────────────┬──┬──────────────────────────┬──────────────────────►
   │              ┌─14─┐      │  │              ┌─1──┐      │
   └─,INCL=───────┤nn──├──────┘  └─,INCR=───────┤nn──├──────┘
```

```
►─┬──────────────────────────────────────────┬─┬──────────────────────────────┬──►
  │                     ┌──────────┐         │ │        (1)      ┌─12000─┐    │
  │           (1)       ▼          │         │ └─,LSTOR=─────────┴─nnnnn─┴────┘
  └─,JOBMIX=──────(─n1─┬──────────┴─)───────┘
                       │    (2)   │
                       └─,nn──────┘

►─┬──────────────────────────┬─┬───────────────────────────┬─┬─────────────────────┬──►
  │        (1)      ┌─14─┐   │ │        (1)      ┌─0───┐   │ │          ┌─14─┐     │
  └─,MAGEL=─────────┴─nn─┴───┘ └─,MAGER=─────────┴─nnn─┴───┘ └─,SAGEL=───┴─nn─┴─────┘

►─┬──────────────────────┬─┬──────────────────────┬─┬──────────────────────────┬──►◄
  │          ┌─0───┐     │ │         ┌─16───┐     │ │           ┌─255─┐        │
  └─,SAGER=──┴─nnn─┴─────┘ └─,SBAR=──┼─PRTY─┼─────┘ └─,SDEPTH=──┴─nnn─┴────────┘
                                     └─nn───┘
```

Notes:

1 The parameter is ignored for WLM-managed job class groups.

2 n_2, n_3,...up to a maximum value of n_{45}.

Parameters

NAME=

Indicates the alphameric name (1-to-8 characters) of the job selection mode. You must specify the NAME parameter as the first parameter on a SELECT statement. This modename can be referenced with the SELECT parameter of the MAINPROC statement or the MODE subparameter on the `*F,G,main,S` command.

If you do not specify a SELECT initialization statement in your initialization stream, a default of JS3BATCH is generated. If you specify a SELECT initialization statement, then the NAME= parameter must be specified.

CHOICE=

Specifies the job selection criteria to control the order of job selection on the main. The criteria are based on the size of the job and its I/O rate. JES3 uses the specified scheduling choice to select the most suitable jobs for execution. The choices available are BMIX, FFIT, FJOB, and FMIX. The following descriptions explain the job selection criteria associated with the different choices:

BMIX

Indicates that the first job in the queue that fits on the main and has a best mix IORATE is scheduled. JES3 determines IORATE from the job's //*MAIN statement or from the CLASS statement (IORATE parameter) that defines the class to which the job belongs. If none of the jobs meet these criteria, the first job that fits and has the alternate mix IORATE is scheduled. If none of the jobs in the queue have the alternate IORATE, the first job to fit will be scheduled.

FFIT

Specifies that the first job in the queue that fits on the main be scheduled. If none of the jobs fit, no job will be scheduled.

FJOB

Specifies that the first job in the queue be scheduled if it fits on the main. Otherwise, no job will be scheduled.

FMIX
Indicates that the first job in the queue that fits on the main and also meets the best or alternate IORATE requirement be scheduled. If none of the jobs in the queue meet these criteria, the first job that fits is scheduled.

If you specify an invalid subparameter, JES3 uses the parameter default.

CLASS=
Identifies either job classes that can be scheduled under this mode or, if a "/" precedes all class names, indicates those job classes that cannot be scheduled under this mode. Use the CLASS parameter to identify classes to be treated in a specific way or to include or exclude classes from a group for purposes of scheduling under this mode.

The CLASS parameter may be continued on another line if all class names cannot fit on one line. The continuation line must follow same format as the preceding line; that is, if the preceding line specified classes to be excluded (by a "/"), then the continuation line also must indicate exclusions. You cannot exclude certain classes in one specification of CLASS and include other classes in another specification. The maximum number of job classes that can be specified is 255. If you omit this parameter, all classes are eligible for scheduling.

GROUP=
Indicates either the names of job class groups (groupnam) that can be scheduled under this SELECT mode and the number of initiators (initnum) to be assigned to each of these groups; or, if a "/" precedes all the group names, this parameter identifies those job class groups that cannot be scheduled under this mode. The subparameter groupnam must match the NAME parameter on a GROUP statement. Jobs in the groups defined here as eligible for scheduling will not be scheduled until the execution resources are allocated. (Allocation is controlled by the allocation option with the EXRESC parameter on a GROUP statement.)

The GROUP parameter may be continued on another line if all class group names cannot fit on one line. A maximum of 255 groups for a single SELECT statement including continuation lines is allowed. The continuation must follow the same format as the preceding line; that is, if the preceding line specified groups to be excluded (by a "/"), then the continuation line must also indicate exclusions. You cannot exclude certain groups in one specification of GROUP and include other groups in another specification.

Notes:

1. The initnum value on the GROUP parameter of the SELECT initialization statement overrides the value of the initcnt parameter on the EXRESC parameter of the GROUP initialization statement.
2. If the GROUP parameter specifies job class group that is WLM managed, the initiator count is ignored. If this job class group is switched to JES3 management using the `*MODIFY,G` command, the initiator count that was specified will be in effect.
3. If the initiator count is omitted and the job class group is JES3 managed, a value of zero is assumed.

If you omit this parameter, all groups are eligible for scheduling.

INCL=
Specifies a limit within the range of 0 to 15 past which a job's priority cannot

be incremented by JES3 main device scheduling (MDS). Note that only jobs requiring volume mounting or referencing a volume that was mounted for another job are incremented by setup.

INCR=
Specifies a decimal number from 0 to 15 that is automatically added to the priority of the job which is set up. If a job has a priority of 5 when it is set up, and INCR=4 is specified, the job's priority is elevated to 9 (or to the value specified in the INCL parameter, whichever is less) after the devices have been allocated and set up. This parameter expedites the processing of jobs once devices have been assigned to them.

JOBMIX=
Specifies 1 to 45 values (ranging from 1 to 15) which indicate the optimal I/O rate job mix for 1 to 15 active initiators. These parameters update the 3 by 15 table (see Table 55) of job mix values. Each row represents the job mix for a particular number of active initiators. The columns express the three job counts for low, high, and medium I/O rate. The JOBMIX parameters change the table as follows: the first three numbers n1, n2, and n3 are the optimal low, high, and medium I/O rate job counts when one initiator is active. The next three numbers n4, n5, and n6 are the job mixes when two initiators are active. The JOBMIX values for n7 through n45 continue across in rows and down a row at a time. If more than 15 initiators are active (as might be the case for a local main), the JOBMIX parameter is calculated to determine the number of active initiators. The scheduling of the next job is then performed based on the defined I/O rates in proportion to the number of active jobs for each I/O rate. If the number of JOBMIX operands exceeds one statement, the n-values can be continued in a JOBMIX parameter on a following statement. See the example of the SELECT statement. Table 55 indicates default JOBMIX values.

Table 55. JOBMIX Default Values

Active Initiators	Low	High	Medium
1	1	1	1
2	1	1	1
3	1	1	1
4	1	2	1
5	1	3	1
6	1	3	2
7	1	4	2
8	2	4	2
9	2	5	2
10	2	5	3
11	2	6	3
12	2	7	3
13	2	7	4
14	3	7	4
15	3	8	4

MAGEL=
Specifies an aging priority limit (0-15) beyond which a job cannot be aged during GMS.

If you specify an invalid subparameter, JES3 uses the parameter default.

MAGER=
Specifies the number (0-255) of times a job must be eligible for aging before its job priority is actually incremented. If 0 is specified, no aging is done.

If you specify an invalid subparameter, JES3 uses the parameter default.

SAGEL=
Specifies an aging priority limit (0-15) beyond which a job cannot be aged during MDS setup for the job.

If you specify an invalid subparameter, JES3 uses the parameter default.

SAGER=
Specifies the number of times (0-255) a job must be eligible for aging during JES3 MDS processing before its job priority is actually incremented. If 0 is specified, no aging is done.

If you specify an invalid subparameter, JES3 uses the parameter default.

SBAR=
Specifies a job priority barrier. Jobs equal to or above this barrier which cannot obtain all their required resources (volumes, data sets, and available devices) will reserve resources as they become available to prevent lower priority jobs from obtaining them.

PRTY
Indicates that the priority of the first job that cannot be setup is the priority barrier.

nn Specifies a job priority level from 0 to 15.

16 Indicates there is no job priority barrier.

If you specify an invalid subparameter, JES3 uses the parameter default.

SDEPTH=
Specifies the maximum number (0-255) of jobs requiring operator mounts that may be set up at one time on any main for which this select mode is active. SDEPTH allows mains with different nonshared device configurations to be given a variable number of setup jobs, depending on the number of devices associated with the main.

If you specify an invalid subparameter, JES3 uses the parameter default.

Note: When deferred mounting is either specified in the JCL for any device (for example, UNIT=(TAPE,,DEFER)) or implicitly requested, by using tape library dataserver devices, JES3 bypasses pre-execution mount processing and does not include the job in its CLASS setup depth (SDEPTH) count unless DEFERCT=YES has been specified on the SETPARAM initialization statement, or the *F S operator command.

Example

In the following example, the SELECT statement is specified for best performance in this environment:

Group	Job Class	I/O Rate	Jobs Per Day
AB	A	Low	100
	B	Low	
CD	C	Medium	200
	D	Medium	
EF	E	High	300
	F	High	
			600 Total

```
SELECT,NAME=SHIFT1,CHOICE=BMIX,CLASS=(A,B,C,D,E,F),
GROUP=(AB,2,CD,2,EF,2)
GROUP,NAME=AB,EXRESC=(SYS1,2)
GROUP,NAME=CD,EXRESC=(SYS1,4)
GROUP,NAME=EF,EXRESC=(SYS1,6)
```

SETACC (Accessibility to Direct-Access Volumes)

Use the SETACC initialization statement to identify those mains that normally have access to a permanently resident direct-access volume. The SETACC statement identifies the location of a volume on the uninitialized mains in a JES3 complex. SETACC prevents JES3 from setting up a job that needs the mounted volume until the main is initialized. When all mains are initialized or the volume is found, the SETACC definition is no longer used and normal JES3 management of the volume and device occurs. The devices on which the volumes reside are defined on a DEVICE statement with an XTYPE parameter and PR subparameter.

Statement Summary

Table 56. SETACC Summary

Required/Optional Statement	Optional
Statement Default	None
Placement in Initialization Stream	This statement must follow the ENDJSAM statement.
Coding Considerations	1. The NAME parameter in the MAINPROC statement defines the main name parameter specified in the SETACC statement. 2. A DEVICE statement indicating the PR subparameter with the XTYPE parameter indicates a device where a permanently resident volume may reside.
Security Usage	None
Performance Considerations	None
Initialization Stream Overrides	The SETACC function is nullified when the specified volume is located on a device or when all of the specified mains become initialized.

Table 56. SETACC Summary (continued)

Restart or Command Modification	• Warm start or cold start for all parameters. • Hot start with refresh for all parameters. The VOL parameter has a dependency on the NAME parameter of the MAINPROC statement. During a hot start with refresh, JES3 does not process MAINPROC statements but uses the MAINPROC statement from the last warm or cold start. If you add a MAINPROC statement during a hot start with refresh, JES3 ignores it and issues error messages if the VOL parameter of the SETACC statement references the MAINPROC statement that you attempted to add during the hot start with refresh.

Syntax

```
►►──SETACC──,──VOL=──(──volser──,procname──┬──────────┬──────┬──)──┤ VOL= ├──────►◄
                                           ▼          │      │
                                           └──,procname─┘      │
```

VOL=:

```
├──────────────────────────────────────────────────────────────────────────────────┤
│                                                                                  │
└──VOL=──(──volser──,procname──┬──────────┬──────┬──)──┘
                               ▼          │      │
                               └──,procname─┘      │
```

Parameters

VOL=
Associates one permanently resident direct-access volume with the specified mains. One VOL parameter is specified for each volume defined on the SETACC statement.

volser
Specifies the volume serial number of a direct access volume. JES3 is to make the volume “unavailable” until the named mains(s) complete initialization.

procname[,procname]
Specifies the name of the mains that must be initialized before JES3 will make the associated volume “available”. Each main name (procname) must match the name parameter on a MAINPROC statement.

Example

In the following example, two volumes are defined to be accessible only by the specified main.

```
SETACC,VOL=(WORKDS,SYS1,SYS2),VOL=(SECURT,SYS1,SYS3)
```

SETNAME (Set JES3 Device Names)

Use the SETNAME initialization statement to specify all user-assigned names and device type names associated with MDS-managed devices.

Statement Summary

Table 57. SETNAME Summary

Required/Optional Statement	Optional
Statement Default	None

Placement in Initialization Stream	This statement must follow the ENDJSAM statement. However, the order of SETNAME statements in your initialization stream affects the order that JES3 uses to select devices. For example, if you want to reserve a group of devices for selection only after all devices from another group are allocated, order your SETNAME statements as follows:
	`SETNAME,XTYPE=LARGE,NAMES=(3380,DISK)`
	`SETNAME,XTYPE=SMALL,NAMES=(3380,DISK,XYZ)`
	
	In the preceding example, JES3 will make an initial attempt to allocate devices from the large group when users specify UNIT=3380 or UNIT=DISK in their JCL. If no devices are available in the large group, JES3 will attempt to allocate a device from the small group. Defining SETNAME statements in this order improves the chances that devices in the small group will be available when a user specifies UNIT=XYZ.

Coding Considerations	1. The XTYPE parameter on this statement must match the first operand of the XTYPE parameter on one or more DEVICE statements. 2. The DEVPOOL parameter on the GROUP statement may match the POOLNAMS parameter on the SETNAME statement. 3. All names specified on the TYPE parameter of the HWSNAME statements must be specified on the NAMES parameter of the SETNAME statements. 4. You can define a maximum of 255 unique XTYPE parameters on a SETNAME initialization statement.
Security Usage	None
Performance Considerations	None
Initialization Stream Overrides	None
Restart or Command Modification	Cold, warm, or hot start with refresh for all parameters. The loss of an esoteric or generic name caused by omitting this statement will cause jobs that use the named device to terminate abnormally.

Syntax

```
►►──SETNAME──,XTYPE=devicetype──┬──,NAMES=──(──name──┬──────────┬──)──────────────►◄
                                │                    └──,name───┘
                                │
                                └──,POOLNAMS=──(──pool──┬──────────┬──)──┘
                                                        └──,pool───┘
```

Parameters

XTYPE=
Indicates a 1- to 8-character name which matches the first operand in the XTYPE parameter on a DEVICE statement. The XTYPE parameter associates this statement with a specific device definition indicated on a DEVICE statement. The XTYPE parameter must always precede the NAMES or POOLNAMS parameters.

Devices within a specific XTYPE should have compatible characteristics. If the XTYPE parameter is the same on two different SETNAME statements, the NAMES parameter on the two statements must be different.

NAMES=
Identifies all names (user-assigned and device type) used to refer to the device defined in the associated DEVICE statement. The NAMES parameter indicates what names are used to specify devices in the UNIT parameter of any DD statements. Each name must also have been indicated during system installation. Note that device type names must be included if allocation of cataloged data sets that reside on these device types is done by JES3 even though the devices are not directly referred to in the UNIT parameter of a DD statement. For example, if UNIT=2314 is specified, 2314 must be defined as a name.

By organizing names, the system programmer can identify unit allocation requirements (including specific device attributes, such as tapes with a special density) and can balance the load across available channel paths.

If the same names are specified in the NAMES parameter, but in a different order for the same XTYPE, an order of preference for device selection is created for requests that require volume mounting. (See the first example.) If an order of preference is created, it must be the same for both JES3 and MVS.

Note: If you have replaced one device type on your system with a different device type and the resource is still referred to using the old device name (for example, in catalog entries), do not remove the name of the old device type from the NAMES parameter. Leave it in and add the name of the new device type.

POOLNAMS=
Specifies the 1- to 8-character name(s) that may be used only for dedicating devices to job class groups or dependent job control jobs. The pool names specified may be used in the DEVPOOL parameter of the GROUP statement and/or the //*NET statement. These names may not be used in the UNIT parameter of the DD statement.

Notes:

1. The MVS generic names must be included if cataloged data sets residing on these types are to be allocated by JES3, even though direct reference to them is not made in the UNIT parameter of their DD statements.
2. There must be a SETNAME statement for the IBM generated esoteric names SYSALLDA, SYS3480R, and SYS348XR in the initialization deck if these values are to be coded or defaulted for allocations which are to be JES3 manages.

   For more information about IBM generated esoteric names, see *z/OS HCD User's Guide*.
3. If a dynamic allocation is made for a time-sharing user and a UNIT parameter is not included in the DD statement, the UNIT parameter is obtained from the time-sharing user attribute data set (UADS). If the UADS does not contain a

UNIT parameter, or if the user is not a time-sharing user, an MVS default of SYSALLDA (that is, all direct access devices) is assumed.

It is recommended that a default UNIT parameter value be defined in the UADS and that all dynamic allocations specify a UNIT parameter. Otherwise, if JES3 is to manage the dynamic allocations that do not have a UNIT parameter, the MVS default UNIT value (SYSALLDA) must be included in SETNAMES for all DA device types.

Examples

Example 1: The following example shows how to achieve a preference order of device selection when devices are on three channel paths and volume mounting is required. As a result of these control cards, requests for DACH1 would attempt allocation on channel path 1, then on channel path 2, and finally on channel path 3. Similarly, requests for DACH2 would attempt allocation first on channel path 2, then on channel path 3, and then on channel path 1. By using DISK1, DISK2, or DISK3, strict channel path separation could be achieved.

```
DEVICE,XTYPE=(3330CH1,DA),XUNIT=(130,SY2,S1,ON)
DEVICE,XTYPE=(3330CH2,DA),XUNIT=(230,SY2,S1,ON)
DEVICE,XTYPE=(3330CH3,DA),XUNIT=(330,SY2,S1,ON)

SETNAME,XTYPE=3330CH1,NAMES=(DACH1,DISK1,3330)
SETNAME,XTYPE=3330CH2,NAMES=(DACH1,DACH2,DISK2,3330)
SETNAME,XTYPE=3330CH3,NAMES=(DACH1,DACH2,DACH3,DISK3,3330)
SETNAME,XTYPE=3330CH1,NAMES=(DACH2,DACH3)
SETNAME,XTYPE=3330CH2,NAMES=(DACH3)
```

Example 2: The following example illustrates how to dedicate two 3330 disks and three tapes on channel path 1. There is a two-channel main processor with four tape devices and four disk devices on each channel path. The accessibility desired by name is:

TAPE	Any tape
TAPEC1	Any tape on channel path 1
TAPEC2	Any tape on channel path 2
DISK	Any disk
DISKC1	Any disk on channel path 1
DISKC2	Any disk on channel path 2
3330	Any 3330 disk
3340	Any 3340 disk

The XTYPE names are chosen to indicate the model of a device and its channel path location. These must be specific enough to allow the separation of devices to satisfy the access level desired.

```
SETNAME,XTYPE=3340C1,NAMES=(DISK,DISKC1,3340)
SETNAME,XTYPE=3340C2,NAMES=(DISK,DISKC2,3340)
SETNAME,XTYPE=3330C1,NAMES=(DISK,DISKC1,3330),
POOLNAMS=NETDISK
SETNAME,XTYPE=3330C2,NAMES=(DISK,DISKC2,3330),
POOLNAMS=NETDISK
SETNAME,XTYPE=3400C1,NAMES=(TAPE,TAPEC1,3400-4),
POOLNAMS=NETTAPE
SETNAME,XTYPE=3400C2,NAMES=(TAPE,TAPEC2,3400-4)
```

SETPARAM (Set MDS Parameters)

Use the SETPARAM initialization statement to specify parameters that the JES3 main device scheduler (MDS) and the DYNAL DSP uses in allocation, mounting, and deallocation of devices for jobs run on all mains. The SETNAME and DEVICE statements are used with the SETPARAM statements. SETNAME and DEVICE identify the devices to be managed by MDS. SETPARAM also indicates how MDS is to manage devices.

Statement Summary

Table 58. SETPARAM Summary

Required/Optional Statement	Optional

Statement Default	`SETPARAM,ADDRSORT=YES,ALLOCATE=AUTO,`
	`DAFETCH=97,`
	`DEFERCT=NO,`
	`DSN=0,FETCH=YES,MDSLOG=97,`
	`REMOUNT=1,TAFETCH=(97,97),ALWIO=10,`
	`MAXIO=25,PRJESMSG=NONE,SMSSETUP=YES`
	`MTJESMSG=(ALLOC,BREAKDWN)`
	
	Note: For the DAFETCH, MDSLOG and TAFETCH parameters, the default of 97 is the routing code equivalent of JES3 Dest Class S1.

Placement in Initialization Stream	This statement must follow the ENDJSAM statement.
Coding Considerations	If SETUP=NONE is specified on the STANDARDS statement to indicate no MDS, then SETPARAM is ignored and all devices are allocated, mounted, and deallocated by MVS.
Security Usage	None
Performance Considerations	None
Initialization Stream Overrides	The SETPARAM statement is overridden if SETUP=NONE is specified on the STANDARDS statement; all devices are allocated, mounted, and deallocated by MVS instead of MDS.
Restart or Command Modification	Warm start or cold start for the SMSSETUP parameter. Cold, warm, or hot start with refresh for all other parameters. Use the `*MODIFY,S` command to change the ALLOCATE, ALWIO, and DEFERCT parameters.

Syntax

```
►►──SETPARAM──┬──────────────────────────────────────┬──┬──────────────────────────────────────┬──►
              │                   ┌─YES─┐            │  │                   ┌─AUTO───┐         │
              └─,ADDRSORT=──┬─────┴─NO────┴──┘         └─,ALLOCATE=──┬──────┴─MANUAL─┴──┘
```

```
►──┬──────────────────────────────────────────────────────────────────────────────────────────────────────►
   │                   ┌─97──────────┐                   ┌─NO──┐                   ┌─0──┐
   └─,DAFETCH=──────┬──┼─msgdest────┼──┘   └─,DEFERCT=──┬─┼─YES─┼──┘   └─,DSN=──┬─┼─nn─┼──┘
                    │  ├─S1──────────┤                   │ └─────┘                  │ └────┘
                    │  └─nnn─────────┘                   │                          │
                    │                                    │                          │
►──┬──────────────────────────────────────────────────────────────────────────────────────────────────────►
   │                 ┌─YES─┐                   ┌─97──────────┐
   └─,FETCH=──────┬──┼─NO──┼──┘   └─,MDSLOG=──┬─┼─nnn────────┼──┘
                  │  └─────┘                  │ ├─msgdest────┤
                  │                           │ └─S1─────────┘
                  │                           │
►──┬──────────────────────────────────────────────────────────────────────────────────────────────────────►
   │                   ┌─(ALLOC,BREAKDWN)─┐                   ┌─NONE──┐
   └─,MTJESMSG=──────┬─┼─ALL─────────────┼──┘   └─,PRJESMSG=──┬─┼─FETCH─┼──┘
                     │ ├─NONE────────────┤                    │ ├─ALLOC─┤
                     │ └─FETCH───────────┘                    │ └─ALL───┘
                     │                                        │
►──┬──────────────────────────────────────────────────────────────────────────────────────────────────────►
   │                 ┌─1──┐                   ┌─YES─┐
   └─,REMOUNT=──────┬─┼─nnn┼──┘   └─,SMSSETUP=──┬─┼─NO──┼──┘
                    │ └────┘                    │ └─────┘
                    │                           │
►──┬──────────────────────────────────────────────────────────────────────────────────────────────────────►
   │                   ┌─97──────────┐   ┌─97──────────┐                   ┌─10──┐
   └─,TAFETCH=──(──────┼─msgdest────┼───┼─msgdest────┼──)──┘   └─,ALWIO=──┬─┼─nn─┼──┘
                       ├─S1──────────┤   ├─S1──────────┤                    │ └────┘
                       └─nnn─────────┘   └─nnn─────────┘                    │
                                                                            │
►──┬──────────────────────────────────────────────────────────────────────────────────────────────────────►◄
   │                 ┌─25──┐
   └─,MAXIO=────────┬─┼─nn─┼──┘
                    │ └────┘
```

Parameters

ADDRSORT=
Specifies the order in which JES3 MDS allocates devices.

NO
Indicates that devices within a device type are to be allocated in the same order as the DEVICE statements are placed in the initialization stream.

YES
Indicates that devices within a device type are to be allocated by the order of their device numbers, that is, 188, 189, 18A.

If you specify an invalid subparameter, JES3 uses the parameter default.

ALLOCATE=
Specifies whether or not automatic allocation of a job is to immediately follow MDS volume fetch. This parameter is ignored for jobs that reference only premounted volumes. The FETCH parameter specified may override the ALLOCATE parameter.

MANUAL
Indicates that all jobs are to be suspended following volume fetch until the operator causes them to continue. Note that ALLOCATE=MANUAL is ignored if FETCH=NO is indicated; ALLOCATE=AUTO is assumed instead.

AUTO
Specifies that MDS will automatically attempt allocation of resources for all eligible jobs. If a job requires SMS-managed resources and you specify ALLOCATE=AUTO, MDS sends the job through the system select phase before allocation to determine which mains have access to the required SMS-managed resources. Note that ALLOCATE=AUTO is assumed (ALLOCATE=MANUAL is ignored) if FETCH=NO is specified.

If you specify an invalid subparameter, JES3 uses the parameter default.

DAFETCH=
Specifies the routing information for direct-access volume fetch messages.

msgdest
Specifies a SETUP-related console destination class. Direct-access volume fetch messages are issued with the routing code equivalent of this destination class.

NONE
indicates that volume fetch messages are not to be issued.

97 Indicates that volume fetch messages are to be issued with routing code 97; messages also are recorded on the hard-copy log. Note that this parameter is ignored if FETCH=NO is also specified.

97 is the routing code equivalent of JES3 Dest Class S1.

nnn
Specifies an MVS routing code from 1 to 28, or 41 to 128. Routing codes 29 through 40 are reserved for IBM's use and will be ignored if specified.

DEFERCT=
Specifies whether or not jobs requiring deferred mounts (whether explicitly requested via JCL, or implicitly requested due to using tape library devices) should be included in the CLASS/SELECT SDEPTH counts. The default is DEFERCT=NO.

DSN=
Specifies the number of characters (0 to 44) of the data set name that is to be included in MDS volume fetch, mount, and breakdown messages. This parameter is used for message formatting. If DSN=0 is specified, or assumed by default, then the data set name is omitted from these MDS messages.

If you specify an invalid subparameter, JES3 uses the parameter default.

FETCH=
Indicates whether or not MDS is to issue volume fetch messages. Note that the FETCH parameter can override the ALLOCATE parameter.

NO
Specifies that MDS is not to issue volume fetch messages. If FETCH=NO is specified, ALLOCATE=MANUAL will be overridden (and ALLOCATE=AUTO assumed); MDS will automatically attempt to set up jobs.

YES
Indicates that MDS is to issue volume fetch messages

If you specify an invalid subparameter, JES3 uses the parameter default.

MDSLOG=
Specifies the routing information for all non-action messages (that is, job LOGON and error messages).

msgdest
Specifies a SETUP-related console destination class. Non-action messages are issued with the routing code equivalent of this destination class.

97 Indicates that non-action messages are to be issued with routing code 97.

97 is the routing code equivalent of JES3 Dest Class S1.

nnn
Specifies an MVS routing code from 1 to 28, or 41 to 128. Routing codes 29 through 40 are reserved for IBM's use and will be ignored if specified.

MTJESMSG=
Specifies whether you want FETCH, ALLOCATION, and BREAKDOWN messages for mountable devices to appear in the JESMSGLG data set.

FETCH
Specifies that you want fetch messages for mountable devices written into the JESMSGLG data set.

ALLOC
Specifies that you want allocation messages for mountable devices written into the JESMSGLG data set.

BREAKDWN
Specifies that you want breakdown messages for mountable devices written into the JESMSGLG data set.

ALL
Specifies that you want fetch, allocation, and breakdown messages for mountable devices written into the JESMSGLG data set.

NONE
Specifies that you do not want fetch, allocation, or breakdown messages for mountable devices written into the JESMSGLG data set.

When you use the default (ALLOC and BREAKDWN), allocation and breakdown messages for mountable devices are written into the JESMSGLG data set.

PRJESMSG=
Specifies whether you want FETCH and ALLOCATION messages for permanently resident or reserved DASD to appear in the JESMSGLG data set.

FETCH
Specifies that you want fetch messages for permanently resident or reserved DASD written into the JESMSGLG data set.

ALLOC
Specifies that you want allocation messages for permanently resident or reserved DASD written into the JESMSGLG data set.

If this value is specified, an allocation message will be written for all non-mountable requests in addition to permanently resident DASD.

ALL
Specifies that you want both fetch and allocation messages for permanently resident or reserved DASD and allocation messages for all other devices written into the JESMSGLG data set .

NONE
Specifies that you do not want fetch or allocation messages for permanently resident or reserved DASD written into the JESMSGLG data set.

If this value is specified, an allocation message will not be written for all non-mountable requests in addition to permanently resident DASD.

REMOUNT=
Specifies the number of times that an operator can retry to correct volume mount errors for a job before the devices for the job are released and allocation is restarted. The value of nnn specifies the number of retries allowed, from 0 to 255. For example, if REMOUNT=1 is specified, the operator can make two attempts to mount the volume—the original mount request and one retry request.

If you specify an invalid subparameter, JES3 uses the parameter default.

SMSSETUP=
Specifies whether JES3 manages system managed storage (SMS) data sets.

NO
Indicates that SMS data sets are not to be managed by JES3.

YES
Indicates that SMS data sets are to be managed by JES3.

If you specify an incorrect subparameter or do not specify the SMSSETUP= parameter, MVS determines whether JES3 manages SMS data sets or not.

TAFETCH=
Specifies the routing information for tape volume fetch messages. The first operand specifies the routing information for specific (nonscratch) volume requests. The second operand specifies the routing information for scratch volume requests.

msgdest
Specifies a SETUP-related console destination class. Tape volume (scratch or nonscratch) fetch messages are issued with the routing code equivalent of this destination class.

NONE
indicates that volume fetch messages are not to be issued.

97 Indicates that volume fetch messages are to be issued with routing code 97; messages also are recorded on the hard-copy log. Note that this parameter is ignored if FETCH=NO is also specified.

97 is the routing code equivalent of JES3 Dest Class S1.

nnn
Specifies an MVS routing code from 1 to 28, or 41 to 128. Routing codes 29 through 40 are reserved for IBM's use and will be ignored if specified.

ALWIO=
The ALWIO parameter specifies the current number of asynchronous I/O requests which can be processed concurrently. This value must be a number from 1 to the value specified in the MAXIO parameter. The value specified in the ALWIO parameter must be less than or equal to the value specified in the MAXIO parameter.

This parameter can be displayed via the *INQUIRY,S,ALWIO=nn command, and modified via the *MODIFY,S,ALWIO=nn operator command.

MAXIO=

The MAXIO parameter specifies the maximum number of asynchronous I/O requests that can be processed concurrently. Storage is obtained for the number of requests specified here. Note that an increase of one in this parameter results in a 76-byte increase in storage used. This parameter can only be changed when performing a warm start or cold start. The value specified in the MAXIO parameter may be a number from 1 to 99. The default value is 25.

The value specified in the MAXIO parameter must be greater than or equal to the value specified in the ALWIO parameter.

Example

In the following example, volume fetch messages are issued with the routing code equivalent of the destination classes specified:

S7 Nonscratch tape volume fetch messages.
S10 Scratch tape fetch messages.
S9 Direct-access volume fetch messages.

Also, MDS messages would identify the first 15 characters of the data set names. All nonaction messages would go to console destination S1. If necessary, one retry to mount any volume would be allowed. Allocation would occur automatically following volume fetch. Allocation order for devices would be by the order of their device numbers.

```
SETPARAM,FETCH=YES,TAFETCH=(S7,S10),DAFETCH=S9,DSN=15
```

SETRES (Mount Direct-Access Volumes)

The SETRES statement identifies frequently used direct-access volumes which are not permanently resident. The SETRES statement specifies volumes which may reside on devices at main initialization time. When a specified volume is found to be present on an MDS-managed, removable, direct-access device during main initialization, the volume is considered mounted by MDS, without a MOUNT command being necessary.

Statement Summary

Table 59. SETRES Summary

Required/Optional Statement	Optional
Statement Default	None
Placement in Initialization Stream	This statement must follow the ENDJSAM statement.
Coding Considerations	A real direct-access device that is listed on a SETRES statement may also be assigned the reserved mount-attribute through a VATLST entry. (*z/OS MVS Using the Subsystem Interface* describes VATLST entries.)
Security Usage	None
Performance Considerations	Using SETRES, the time required to perform volume setup following a JES3 restart is reduced and management of highly used direct-access setup volumes is simplified. (No action is taken if a specified volume is not found during initialization.) JES3 treats the specified volumes as mounted until an MDS unload is issued.
Initialization Stream Overrides	None

Table 59. SETRES Summary (continued)

Restart or Command Modification	Cold start, warm start, or hot start with refresh for all parameters.

Syntax

```
►►──SETRES──,──VOL=──(──volser──┬──────────┬──┬──────────┬──)──────────────────────────►◄
                                ▲          │  │          │
                                └──,volser─┘  └──,volser─┘
```

Parameters

VOL=
Indicates the volume serial numbers of volumes mounted on devices that can have these volumes removed (unmounted) by JES3 MDS. (Note that the XTYPE parameter on the DEVICE statement for the associated devices must include the RM subparameter.)

Example

In the following example, four volumes with these serial numbers are marked as mounted if found on devices at the time a main is initialized.

```
SETRES,VOL=(111111,222222,2314AA,3330BB)
```

SPART (Spool Partition Definition)

The SPART statement defines one spool partition and specifies:
- The name of the partition
- Whether JES3 is to use the partition as the default partition
- Whether JES3 is to write initialization information to the named partition
- Whether the partition is to overflow into another partition
- The number of records in each track group

Statement Summary

Table 60. SPART Summary

Required/Optional Statement	Optional
Statement Default	If the initialization stream includes no SPART statements, JES3 defines one spool partition and names it JES3PART. JES3 then writes all spool data and the checkpoint information to this spool partition.
Placement in Initialization Stream	The SPART statements must all appear before the ENDJSAM statement.

Table 60. SPART Summary (continued)

Coding Considerations	1. You may include up to 1024 SPART statements in the initialization stream. One or more of the spool partitions can be "dummy" partitions that do not contain any data sets. 2. If you add SPART statements during a warm start, include them *following* existing SPART statements in the initialization stream. 3. The SPART parameter specified on a CLASS, FORMAT, MAINPROC, NJERMT, SYSOUT or TRACK statement must correspond to the NAME parameter specified on an SPART statement.
Security Usage	None
Performance Considerations	None
Initialization Stream Overrides	The SPLIM and GRPSZ parameter specifications on the SPART statement override the SPLIM and GRPSZ parameter specifications on the BUFFER statement.
Restart or Command Modification	Warm start or cold start for all parameters. Use the `*MODIFY,Q,SP=` command to change the OVRFL parameter.

Syntax

```
►►──SPART──,NAME=partitionname──┬──────────────────────────┬──┬──────────────────────────┬──►
                                │          ┌─NO─┐          │  │          ┌─NO─┐          │
                                └─,DEF=────┴─YES┘──────────┘  └─,INIT=───┴─YES┘──────────┘

►──┬──────────────────────────────────────────────┬──┬──────────────────────────┬──►
   │          ┌─10──┐       ┌─25──┐              │  │          ┌─YES─┐         │
   └─,SPLIM=──(──┴─min─┘──,──┴─marg─┘──)──────────┘  └─,OVRFL=───┴─NO──┘─────────┘

►──┬──────────────────────────────────────────────┬──────────────────────────────►◄
   │          ┌─30──────────────┐                │
   └─,GRPSZ=──┼─nnn──────────────┼────────────────┘
              └─partitionname───┘
```

Parameters

NAME=
Specifies the 1-8 character name of the spool partition. You cannot specify DRAINED, UNAVAIL, DELETED, YES, NO or a partition name where the first character is a numeric.

DEF=
Specifies whether this is the default spool partition.

YES
Specifies that this is the default spool partition.

NO
Specifies that this is not the default spool partition.

If you do not specify the DEF parameter on any SPART statements, the partition defined on the first SPART statement in the initialization stream becomes the default partition.

If you have defined only one partition, that partition becomes the default, even if you have specified DEF=NO on the SPART statement.

If you specify DEF=YES on more than one SPART statement, the partition defined on the first statement that specifies DEF=YES becomes the default partition.

If you omit this parameter, JES3 uses DEF=NO for all partitions except the first; DEF=YES for the first or only partition.

If you specify an invalid subparameter, JES3 uses the parameter default.

INIT=
Specifies whether JES3 is to use this partition to write the initialization data needed for hot starts or local starts.

YES
Specifies that JES3 is to use this partition.

NO
Specifies that JES3 is not to use this partition.

If you omit INIT=YES from all SPART statements, JES3 writes the initialization data to the default spool partition.

If you specify INIT=YES on more than one SPART statement, JES3 writes the initialization data to the partition defined on the first SPART statement that specifies INIT=YES.

If you specify an invalid subparameter, JES3 uses the parameter default.

SPLIM=
Specifies the minimum and marginal percentages of spool space still available in active spool partitions. An active spool partition is one containing at least one spool data set. If the minimal or marginal percentages of spool space are reached, indicating that a spool partition is nearly full, JES3 issues action messages to the operator.

min
Specifies the percentage of total spool space in an active spool partition which, when that percentage is all that is still available, defines a minimum spool space condition. For example, if ***min*** specifies 10, a minimum spool space condition exists when 10% or less of the spool space in an active spool partition is still available.

The percentage of spool space defining this condition may be between 0 and 99. It must, however, be smaller than or equal to the percentage defining a marginal spool space condition (see the next subparameter).

When a spool partition reaches a minimum spool space condition, JES3 issues a message stating that this condition has occurred. The message alerts the operator to inquire whether the spool partition automatically overflows into another partition. If the spool partition does overflow, no operator action is required. If the spool partition is not defined to overflow into another partition, the operator can use operator commands to take

appropriate actions. For information on actions to take, see "Balancing the Workload Across Partitions" in *z/OS JES3 Initialization and Tuning Guide*.

If a minimum spool space condition arises on the default spool partition, JES3 suspends all SYSOUT buffer processing. JES3 does not resume SYSOUT buffer processing until enough spool space is freed to reach a marginal spool space condition.

Always specify a minimum spool space percentage for the default spool partition so that enough spool space remains to perform a warm start. Otherwise, if JES3 requires a warm start and not enough spool space is available, you must perform a cold start.

marg
Specifies the percentage of total spool space in an active spool partition which, when that percentage is all that is still available, defines a marginal spool space condition. For example, if ***marg*** specifies 20, a marginal spool space condition exists when 20% or less of the spool space in an active spool partition is still available.

The percentage of spool space defining this condition may be between 0 and 99.

When a spool partition reaches a marginal spool space condition, JES3 issues a message stating that this condition has occurred. The message alerts the operator to inquire whether the spool partition automatically overflows into another partition. If the spool partition does overflow, no operator action is required. If the spool partition is not defined to overflow into another partition, the operator can use operator commands to take appropriate actions. For information on actions to take, see "Balancing the Workload Across Partitions" in *z/OS JES3 Initialization and Tuning Guide*.

If you specify an invalid subparameter, JES3 uses the parameter default.

OVRFL=
Indicates where, if anywhere, data for this spool partition may be put when this partition becomes full. If the spool partition defined by this SPART statement is the default partition, this parameter is ignored. For guidelines on choosing overflow partitions, see "Defining Spool Partition Overflow" in *z/OS JES3 Initialization and Tuning Guide*.

YES
Specifies that this spool partition may overflow only into the default spool partition.

NO
Specifies that this spool partition may not overflow into any other spool partition. Jobs requesting spool space in this partition when it is full will wait until space becomes available.

partitionname
Specifies the name of the spool partition into which this spool partition overflows.

If you specify an invalid subparameter, JES3 uses the parameter default.

GRPSZ=
Specifies the number of spool records in each track group. (The BUFSIZE parameter determines the size of each spool record.) The number must not be greater than 999. JES3 rounds the specified value up to the number of records in the nearest whole physical track for the selected spool device type. For

guidelines to help you select a value for this parameter, see "Determining the Size of a Track Group" in *z/OS JES3 Initialization and Tuning Guide*.

If you change the group size parameter, you must perform a warm start. See *z/OS JES3 Commands* for information about how to replace a spool data set (WR).

If you omit this parameter, the default value is taken from the GRPSZ parameter of the BUFFER statement. If omitted from both statements, the default is 30.

If you specify an invalid subparameter, JES3 uses the parameter default.

Examples

Example 1: The following example defines two spool partitions, PARTA and PARTB. Partition PARTB is the default partition. JES3 also writes initialization information to partition PARTB.

```
SPART,NAME=PARTA
SPART,NAME=PARTB,DEF=YES,INIT=YES
```

Example 2: This example also defines two partitions, PARTC and PARTD. Because neither SPART statement specifies DEF=YES, JES3 uses the partition defined by the first SPART statement as the default partition (PARTC). Because neither SPART statement specifies INIT=YES, JES3 writes initialization information to the default partition, PARTC.

```
SPART,NAME=PARTC
SPART,NAME=PARTD
```

Example 3: This example defines 4 partitions. PART1 is the default partition. JES3 also writes initialization information to PART1. The second partition, PART2, overflows into the third partition, PART3, which overflows into the fourth partition. PART4 overflows into the default partition, PART1.

```
SPART,NAME=PART1,DEF=YES,INIT=YES
SPART,NAME=PART2,OVRFL=PART3
SPART,NAME=PART3,OVRFL=PART4
SPART,NAME=PART4,OVRFL=PART1
```

STANDARDS (Installation Defaults and Standards)

Use the STANDARDS initialization statement to specify default values for information not provided on other JES3 initialization statements or on the //*FORMAT JES3 control statement. It also provides standards to be applied to all jobs entering the system.

Statement Summary

Table 61. STANDARDS Summary

Required/Optional Statement	Optional

Table 61. STANDARDS Summary (continued)

Statement Default	`STANDARDS,ALTJCL=ACCEPT,`
	`CARDS=(2,W,50),CICNT=(2,1),`
	`DBGCLASS=A,FAILURE=RESTART,JESMSG=NOTSO,`
	`LINES=(1,W,10),MAXJOBST=0,MAXASST=0,`
	`MAXINDD=MAXJOBST,PRTY=0,SETUP=JOB,`
	`INTPMID=01,STCMID=01,TSOPMID=01,INTPROC=ST,`
	`STCPROC=ST,TSOPROC=ST,BYTES=(1500,W,50),`
	`SYSLINES=(10,50),PAGES=(500,W,50)`
	`,CIDEMAND=ANY,CIBATCH=ANY`

Placement in Initialization Stream	This statement must follow the ENDJSAM statement.
Coding Considerations	None
Security Usage	None
Performance Considerations	None
Initialization Stream Overrides	None
Restart or Command Modification	• Warm start or cold start for all parameters. • Hot start with refresh for all parameters, except SETUP and THWSSEP. – Use the `*MODIFY,X,D=` command to change the CICNT, MAXASST, MAXJOBST, and PSTCNT parameters. Use the `*MODIFY,S` command to change the THWSSEP parameter.

Syntax

```
►►──STANDARDS──┬───────────────────────────┬──────────────────────────────►
               │            ┌─ACCEPT──┐    │
               └─,ALTJCL=───┼─ERROR───┼────┘
                            ├─IGNOREW─┤
                            └─COMMENT─┘

►─┬──────────────────────────────────────────────────────────────┬────────►
  │             ┌─2───┐       ┌─WARNING or W─┐       ┌─50──┐     │
  └─,CARDS=──(──┴─nnn─┴───,───┼─CANCEL or C──┼───,───┴─nnn─┴─────┘
                              └─DUMP or D────┘

►─┬──────────────────────────────────────────────────────┬─┬──────────────────────┬─►
  │             ┌─2────────┐        ┌─1─────────┐        │ │             ┌─ANY───┐│
  └─,CICNT=──(──┴─maxbatch─┴───,────┴─maxdemsel─┴───)────┘ └─,CIBATCH=───┼─CLASS─┼┘
                                                                         └─JOB───┘

►─┬──────────────────────────┬─┬────────────────────────────────┬────────►
  │              ┌─ANY───┐   │ └─,PSTCNT=(maxbatch,maxdemsel)───┘
  └─,CIDEMAND=───┼─CLASS─┼───┘
                 └─JOB───┘
```

STANDARDS

```
►──┬──────────────────────────┬──┬──────────────────────────┬──►
  └,DBGCLASS=──┬─A─────────┬──┘  └,FAILURE=──┬─RESTART─┬──┘
               └─msgclass──┘                 ├─CANCEL──┤
                                             ├─HOLD────┤
                                             └─PRINT───┘

►──┬──────────────────────────────────────────────────────────►
  └,JESMSG=──┬─NOTSO─┬──┬──────────────────────────┬──┘
             ├─┤ Other Options ├─┤
             └─ALL─────────────┘

►──┬──────────────────────────────────────────────────────────►
  └,LINES=──(──┬─1───┬──,──┬─WARNING or W─┬──,──┬─50──┬──┘
               └─nnn─┘     ├─CANCEL or C──┤     └─nnn─┘
                           └─DUMP or D───┘

►──┬──────────────────────────────────────────────────────────►
  └,BYTES=──(──┬─1500────┬──,──┬─WARNING or W─┬──,──┬─50──┬──┘
               └─nnnnnnn─┘     ├─CANCEL or C──┤     └─nnn─┘
                               └─DUMP or D───┘

►──┬──────────────────────────────────────────────────────────►
  └,PAGES=──(──┬─500─────┬──,──┬─WARNING or W─┬──,──┬─50──┬──┘
               └─nnnnnnn─┘     ├─CANCEL or C──┤     └─nnn─┘
                               └─DUMP or D───┘

►──┬──────────────────────┬──┬──────────────────────┬──┬──────────────────────┬──►
  └,MAXJOBST=──┬─0───┬──┘  └,MAXASST=──┬─0───┬──┘  └,MAXINDD=──┬─MAXJOBST─┬──┘
               └─nnn─┘                 └─nnn─┘                  └─nnn──────┘

►──┬──────────────────────────────────┬──┬──────────────────────────┬──────►
  └,PRTY=──┬─0─────────────────────┬──┘  └,SETUP=──┬─JOB───┬──┘
           └─defaultpriority───────┘               ├─NONE──┤
                                                   ├─DHWS──┤
                                                   ├─THWS──┤
                                                   └─HWS───┘

►──┬──────────────────────────────────┬──┬──────────────────────────┬──►
  └,SYSLINES=──┬─10────┬──,──┬─50──┬──┘  └,THWSSEP=──┬─IGNORE──┬──┘
               └─nnnnn─┘     └─mmm─┘                 ├─PREFER──┤
                                                     └─REQUIRE─┘

►──┬──────────────────────┬──┬──────────────────────┬──┬──────────────────────┬──►
  └,INTPMID=──┬─01─┬──┘  └,STCPMID=──┬─01─┬──┘  └,TSOPMID=──┬─01─┬──┘
              └─xx─┘                 └─id─┘                  └─id─┘

►──┬──────────────────────┬──┬──────────────────────┬──┬──────────────────────┬──►◄
  └,INTPROC=──┬─ST─┬──┘  └,STCPROC=──┬─ST─┬──┘  └,TSOPROC=──┬─ST─┬──┘
              └─xx─┘                 └─xx─┘                  └─xx─┘
```

Other Options:

```
(1)
├──────(──┬─NOTSO──┬──┬──,──┬──)──────────────────────────────────┤
          ├─NOSTC───┤  └─────┘
          └─NOBATCH─┘
```

Notes:

1 You are allowed a maximum of only 3 parameters within the parenthesis.

Parameters

ALTJCL=

Specifies whether JES3 recognizes JES3 control statements in JCL that begin with "/*" instead of "//*" (for example, /*MAIN instead of //*MAIN).

- ERROR - indicates that JES3 control statements beginning with "/*" will be rejected, and will cause the job to be cancelled with an error message.
- IGNOREW - indicates that JES3 control statements beginning with "/*" will be rejected, and will cause a warning message to be issued, but will not cause the job to be cancelled.
- COMMENT - indicates that JES3 control statements beginning with "/*" will be rejected. No messages will be issued.
- ACCEPT - indicates that certain JES3 control statements beginning with "/*" will be processed. Note that some JES3 control statements, such as //*NET, must begin with "//*". These will be treated as comments. This is the default.

CARDS=

Defines the maximum number of cards a job may punch and how to handle jobs exceeding this maximum.

nnn

Specifies the maximum number of cards, in hundreds, from 1 to 999. The default is 2; that is, 200 punched cards.

CANCEL or C

Specifies that a job be canceled without a dump if it exceeds nnn.

DUMP or D

Specifies that a job be canceled with a system abend dump if the job exceeds nnn.

WARNING or W

Specifies that JES3 issue a warning message and continue processing the job if it exceeds the punch limit. JES3 reissues a warning message for every additional 100 (default) cards the job punches.

mmm or 50

Regulates the frequency that JES3 issues message IAT1600 after exceeding the maximum punch limit (***mmm*** is a percentage of the maximum punch limit). The value you specify must be a multiple of 10 between 10 and 100 inclusive. Specifying too low a value can cause JES3 to flood the system with messages which in turn, can cause a shortage of staging areas and console buffers. To decrease the number of messages issued, use higher values for ***nnn*** and ***mmm***.

If you specify an invalid subparameter, JES3 uses the parameter default.

CIBATCH=

indicates whether or not batch jobs must have CI processing limited to certain processors. This will apply to all batch jobs unless overridden by the CIBATCH parameter on the CLASS statement pertaining to a job's JOB CLASS.

- JOB - indicates CI processing must be performed on a system on which the job is eligible to run.

Note: Only the JES3 `//*MAIN SYSTEM=` JECL statement (NOT the job's scheduling environment) is considered for CI scheduling purposes when determining where the job is eligible to run.

- CLASS - indicates CI processing must be performed on a system on which the job's JOB CLASS is enabled.
- ANY - indicates CI processing may be performed on any processor regardless of job or class eligibility. This is the default.

CIDEMAND=
indicates whether or not demand select jobs must have CI processing limited to certain processors. This will apply to all demand select jobs unless overridden by the CIDEMAND parameter on the CLASS statement pertaining to a job's JOB CLASS.

- JOB - indicates CI processing must be performed on a system on which the job is eligible to run.
- CLASS - indicates CI processing must be performed on a system on which the job's JOB CLASS is enabled.
- ANY - indicates CI processing may be performed on any processor regardless of job or class eligibility. This is the default.

CICNT=
Specifies the maximum number of CI DSPs that can operate in the JES3 global address space at any time. The first subparameter (***maxbatch***) specifies the maximum number of CI DSPs that process batch jobs. The second subparameter (***maxdemsel***) specifies the maximum number of CI DSPs that process demand select jobs (that is, started tasks and TSO LOGONs).

The sum of the two subparameters cannot exceed 255. CI DSPs defined to process batch jobs cannot be used to process demand select jobs, and vice versa.

Specify as small a number as practical, since this parameter can be modified using an operator command. The count can be incremented or decremented using the *MODIFY,X operator command.

Notes:

1. If you specify CICNT=(0,0), no CI DSPs will run in the JES3 global address space. However, specifying CICNT=0 defaults to CICNT=(0,1) and results in one demand select CI DSP in the JES3 global address space.
2. If you define C/I FSS address spaces for your installation, JES3 creates a special C/I subtask in the JES3 global address space for starting C/I FSS address spaces; it cannot be used for starting other tasks or TSO LOGONs. This subtask allows a C/I FSS address space to be started even if you specify CICNT=(0,0) in the initialization stream.

If you specify an invalid subparameter, JES3 uses the parameter default.

PSTCNT=
Specifies the maximum number of POSTSCAN DSPs that can operate in the JES3 global address space at any one time. The first subparameter ***(maxbatch)*** indicates the maximum number of POSTSCAN DSPs that can process batch jobs. The second subparameter ***(maxdemsel)*** indicates the maximum number of POSTSCAN DSPs that process demand select jobs (that is, started tasks and TSO LOGONs). A POSTSCAN DSP defined as processing batch jobs cannot be used to process demand select jobs, and vice versa.

The total of both numbers specified for this parameter must be between 1 and 32,767 (inclusive).

For guidelines on choosing a value for this parameter, see "Configuring C/I Processing" in *z/OS JES3 Initialization and Tuning Guide*.

Parameter Default: The combined maximum number of CI DSPs in the JES3 complex that can process batch jobs (maxbatch) and demand select jobs (maxdemsel). (That is, the total number of CI DSPs specified on the CICNT parameter of the STANDARDS statement, plus the number of CI DSPs specified on the DSPCNT parameter of every FSSDEF statement for a C/I FSS address space, including all values allowed to default.)

DBGCLASS=
Specifies the default message class for the debug dataset written by the debug facility and the default SYSOUT class for JES3 Dynamic Support Programs (DSP).

FAILURE=
Specifies the default job recovery option to be applied to jobs active at the time of a main restart failure. This parameter is used if the FAILURE option is not indicated on the CLASS statement associated with the job and the job does not have a main MVS checkpoint/restart option specified in its JCL.

CANCEL
Specifies that the job be canceled on the main.

HOLD
Specifies that the job be held for restart on the main.

PRINT
Specifies that the job be printed and held for restart on the main.

RESTART
Specifies that the job be restarted on the main at the beginning of the first step.

Note: If a job has been registered as an element of automatic restart management, the FAILURE= keyword is ignored.

If automatic restart management decides to start the job, all non-spin sysout datasets created during the previous execution will be deleted.

A job in a JES3 system can have a failure option specified in one of the following:

1. //*MAIN JECL statement in the job's JCL
2. CLASS statement in the JES3 initialization stream
3. STANDARDS statement in the JES3 initialization stream

Note: Higher items override lower items in the above list.

The failure option is used to determine the disposition of a job when one of the following occurs:

- The job is executing and the processor on which the job is executing fails (is IPLed).
- The job terminates abnormally.
- The job goes through end of memory.
- A *RESTART,main,jobname/jobno command has been issued for a job that is already running and the job is not registered with Automatic Restart Manager (ARM). If the failure option is RESTART, the job will be restarted. If the failure option is CANCEL, the *RESTART,main,jobname/jobno

command is not accepted, and the job continues to run. If the failure option is HOLD, the job is cancelled, and then placed in operator hold. If the failure option is PRINT, the job is printed, then it is placed in operator hold.

- A *START,mainname,FLUSH command was issued for a local processor and there were jobs running on the specified local.
- A *MODIFY Q,DD=ddn,STOP command was issued for a spool data set. This command holds the specified spool data set and suspends further scheduling for all jobs that have data on the data set, if the jobs are not currently active on a processor. But, if there were a job that had data on the data set, and it was active on main, JES3 issues a command to MVS on the appropriate processor to (MVS) cancel the job. All jobs (whether active on main or not) get placed into spool hold status. Later, if a *MODIFY Q,DD=ddn,RELEASE command is issued to release the specified spool data set, and the jobs from spool hold status, and the job had been active in main when it was put into spool hold status, the failure options are used to (JES3) cancel the job, place the job in operator hold, print the job and then place it into operator hold, or restart the job.

JESMSG=

Specifies whether JES3 suppresses WTOs and WTORs that are sent to the JESMSGLG data set for TSO users, started tasks, or batch jobs. Suppressing the WTOs and WTORs sent to the JESMSGLG data set significantly reduces the subsystem interface traffic and the number of spool I/O requests needed to support JESMSGLG logging.

NOTSO

Indicates that JES3 should not send WTOs and WTORs originating from TSO users to the JES3 global processor and that these messages are not to be logged in the JESMSGLG spool data set.

NOSTC

Indicates that JES3 should not send WTOs and WTORs originating from started tasks to the JES3 global processor and that these messages are not to be logged in the JESMSGLG spool data set.

NOBATCH

Indicates that JES3 should not send WTOs and WTORs originating from batch jobs to the JES3 global processor and that these messages are not to be logged in the JESMSGLG spool data set.

ALL

Indicates that JES3 should send all WTOs and WTORs to the JES3 global and that these messages are to be logged in the JESMSGLG spool data set.

If you specify this parameter, you cannot specify any other parameter. If you do so, JES3 uses the default value of **NOTSO**.

If you specify an invalid subparameter, JES3 uses the parameter default of **NOTSO**.

Note: Using the JESMSG= keyword on the CLASS initialization statement overrides the JESMSG= specification on the STANDARDS initialization statement.

LINES=

Defines the maximum number of lines to be printed for a single job and how to handle jobs exceeding this maximum.

nnn
Specifies the maximum number of lines, in thousands, from 1 to 999. The default is 1; that is, 1000 lines.

CANCEL or C
Specifies that a job be canceled if it exceeds nnn.

DUMP or D
Specifies that a job be canceled with a system abend dump is the job exceeds nnn.

WARNING or W
Specifies that JES3 issue a warning message and continue processing the job if it exceeds the line limit. JES3 reissues a warning message for every additional 500 (default) lines the job prints.

mmm or 50
Regulates the frequency that JES3 issues message IAT1600 after exceeding the maximum line limit (***mmm*** is a percentage of the maximum line limit). The value you specify must be a multiple of 10 between 10 and 100 inclusive. Specifying too low a value can cause JES3 to flood the system with messages which in turn, can cause a shortage of staging areas and console buffers. To decrease the number of messages issued, use higher values for ***nnn*** and ***mmm***. If you specify an invalid parameter, JES3 uses the parameter default.

If you specify an invalid subparameter, JES3 uses the parameter default.

MAXJOBST=
Specifies the maximum number of JCL statements that a batch job can include. JES3 control statements are not counted. This limit applies no matter where in the complex the job's C/I processing takes place. For a discussion about how to select the job JCL limit, see "Preventing a Job from Dominating the SWA" in *z/OS JES3 Initialization and Tuning Guide*.

nnn
Specifies the total number of JCL statements that a single job may contain and still be processed by a converter/interpreter (CI) DSP. ***nnn*** may be any decimal integer from 0 to 99999999, inclusive. Specifying 0 indicates that you do not want to limit the total number of JCL statements in a single job.

If you specify an invalid subparameter, JES3 uses the parameter default.

MAXASST=
Specifies the maximum number of JCL statements for batch jobs that may be processed concurrently by all CI DSPs in the JES3 global address space. The value must be an integer between 0 and 99999999, inclusive. A value of 0 means no JCL statement limit applies; JES3 does not check how many JCL statements are being processed. For guidelines on choosing a value for this parameter, see *z/OS JES3 Initialization and Tuning Guide*.

If you specify an invalid subparameter, JES3 uses the parameter default.

MAXINDD=
Specifies the maximum number of JCL SYSIN DD statements that a batch job can include. Only DD* and DD DATA DD statements are included in this count. Other types of DD statements are not counted. For a discussion about how to select the job SYSIN DD limit see "Preventing a Job from Dominating the JSAM Buffers" in *z/OS JES3 Initialization and Tuning Guide*.

nnn
Specifies the number of JCL SYSIN DD statements that a single job may contain and still be processed. *nnn* may be any decimal integer from 0 to 99999999, inclusive. Specifying 0 indicates that you do not want to limit the number of DD statements in a single job.

If you specify an invalid subparameter, JES3 uses the parameter default.

Note: The parameter default will be whatever value was specified for the MAXJOBST parameter, or the default value for MAXJOBST if MAXJOBST was not specified.

PRTY=
Specifies the default job priority (0 to 14) for a job whose priority is not specified in the JCL or on the CLASS statement.

If you specify an invalid subparameter, JES3 uses the parameter default.

SETUP=
Indicates the system standard for allocation of devices identified by the NAME parameter of SETNAME statement(s). The SETUP parameter specifies the type of setup processing, such as job setup, tape high watermark setup, or disk high watermark setup. This parameter also provides the default for the SETUP parameter on the //*MAIN JES3 statement and also, SETUP=NONE overrides the SETUP parameter on the //*MAIN statement.

NONE
Specifies that no preexecution setup is to occur. All devices are allocated, mounted, and deallocated by MVS; the SETPARAM statement is ignored. The SETUNITS and SETNAME tables are created even though MDS processing does not occur.

JOB
Specifies that preexecution setup is to occur by job for those devices (indicated in the UNIT parameter of DD statements for the job) which are identified in the SETNAME statement. All devices for the job are allocated to the job from first step to last. This type of setup improves job turnaround time at the expense of overall device usage efficiency.

DHWS
Specifies that high watermark setup is to occur for only MVS direct-access units identified in the SETNAME statement. The direct-access units must also be specified on the TYPE parameter of the HWSNAME statement. MDS will attempt to allocate the minimum number of direct-access devices for a job. Other devices are allocated based on the amount required for the entire job.

If you specify an invalid subparameter, JES3 uses the parameter default.

THWS
Specifies that high watermark setup is to occur for only tape units identified in the SETNAME statement. The tape units must also be specified on the TYPE parameter of the HWSNAME statement. MDS will attempt to allocate the minimum number of tape devices for a job. Direct-access devices are allocated based on the amount for the entire job.

HWS
Specifies that high watermark setup is to occur for all devices required for a job running on an MVS processor which are indicated in the SETNAME statement. The devices must also be specified on the TYPE parameter of

the HWSNAME statement. MDS will attempt to allocate the minimum number of devices required for the job to run.

SYSLINES=

nnnn
Defines the maximum number of JESYSMSG message lines, in thousands, that are issued before the system issues message IAT1613. **nnnn** may be any decimal integer from 1 to 9999, inclusive. The default is 10 (10,000 messages). If you specify an incorrect value, JES3 uses the default.

mmm
The frequency at which JES3 issues message IAT1613 after exceeding the original SYSLINES limit. **mmm** is a percentage of the original SYSLINES limit. The value you specify must be a multiple of 10 between 10 and 100 inclusive. The default is 50 (50%). If you specify an incorrect value, JES3 uses the default.

Specifying values too low can cause JES3 to issue message IAT1613 prematurely or too frequently for normal conditions (for example, a long running started task). To decrease the number of IAT1613 messages issued, use higher *nnnn* and *mmm* values.

THWSSEP=
Specifies whether you want scratch and specific tape requests, or scratch tape requests of different media types separated during high watermark processing. This parameter is valid only when you specify the HWS or THWS parameter of the SETUP parameter.

You can use this parameter to direct specific and scratch tape requests to different types of tape drives. For example, you may want JES3 to allocate only scratch tape requests to an IBM 3480 that is equipped with an automatic cartridge loader.

You can also use this parameter to direct scratch tape requests that have a preferred media type to different drives. JES3 attempts to allocate a device matching the media type whenever possible.

An end user can override this parameter using a //*MAIN JECL statement. The values also can be modified using the JES3 *MODIFY,S command. For information about using the JES3 *MODIFY,S command see *z/OS JES3 Commands*.

IGNORE
Specifies that JES3 not separate scratch and specific tape requests and not separate scratch tape requests of different media types during high watermark processing. Both scratch and specific tape requests and scratch requests of different media types can be allocated on the same tape drive.

PREFER
Specifies that JES3 attempt to allocate scratch and specific tape requests on separate tape drives and attempt to allocate scratch tape requests of different media types on separate tape drives without allocating additional devices. If JES3 cannot separate the requests, scratch and specific tape requests and scratch requests of different media types will be allocated on the same tape drive.

REQUIRE
Specifies that JES3 should not allocate scratch and specific tape requests on

the same tape drive and not allocate scratch tape requests of different media types on the same tape drive, even if JES3 must allocate additional tape drives to satisfy the request.

INTPMID=
Specifies the 2-byte identifier (ID) of the converter/interpreter options list for jobs entered using the internal reader. The ID must match the ID specified by the PARMID parameter on a CIPARM initialization statement. If no CIPARM statements are included in the initialization stream, the default value is used.

If you specify an invalid subparameter, JES3 uses the parameter default.

STCPMID=
Specifies the 2-byte identifier of the parameter list to be used when interpreting started task jobs. The parameter list specified must be defined on a CIPARM statement.

TSOPMID=
Specifies the 2-byte identifier of the parameter list to be used when interpreting TSO LOGON jobs. The parameter list must be defined on a CIPARM statement.

For TSO-submitted jobs, the message class is determined as follows:

- If the job has the MSGCLASS parameter coded on the job statement, the value specified on that parameter is used.
- Otherwise, the message class is taken from the MSGCLASS and/or the HOLD (HOLDCLASS) parameters specified in the user's profile in either the TSO/E UADS or the TSO/E segment of the RACF data base. The MSGCLASS parameter value is used as the message class if the job was submitted using the TSO/E SUBMIT jjj or SUBMIT jjj HOLD command. The HOLD (or HOLDCLASS) parameter value is used as the message class if the job was submitted using the TSO/E SUBMIT jjj HOLD command.
- The specified or default message class from the CIPARM initialization statement associated with the INTPMID= parameter on the STANDARDS initialization statement.

For jobs submitted by another job through the internal reader (regardless of whether of not the submitting job is from TSO):

1. If the job has the MSGCLASS parameter coded on the JOB statement, the value specified on that parameter is used.
2. The SYSOUT class from the DD statement that specifies INTRDR.
3. The specified or default message class from the CIPARM initialization statement associated with the INTPMID= parameter on the STANDARDS initialization statement.

INTPROC=
Specifies the appropriate IATPLBxx procedure library to be searched by the MVS converter when resolving procedure references for jobs submitted using the internal reader. This procedure library must be defined by an IATPLBxx DD statement in the JES3 start procedure or by a DYNALLOC initialization statement. An individual job can override this value using the PROC parameter on the //*MAIN JES3 control statement.

Note: Jobs entering from a disk reader or NJERDR use the standard procedure library as defined on the IATPLBST DD statement in the JES3 procedure or from the DYNALLOC initialization statement.

If you specify an invalid subparameter, JES3 uses the parameter default.

STCPROC=
Specifies the appropriate IATPLBxx procedure library used for started task jobs. This procedure library must be defined by a IATPLBxx DD statement in the JES3 procedure or a DYNALLOC initialization statement. The default is IATPLBST.

TSOPROC=
Specifies the appropriate IATPLBxx procedure library to be used for TSO LOGON jobs. This procedure library must be defined on a IATPLBxx DD statement or a DYNALLOC statement. The default procedure library is IATPLBST.

BYTES=
Specifies the maximum number of bytes of data that can be written to a spool data set for a job and the action to be taken for any job that exceeds the maximum.

nnnnnn
Specifies the maximum number of bytes of data that can be written to a spool data set for a job. The value specified must be between 1 and 999999, inclusive, and represents thousands of bytes (that is, 1000 times nnnnnn) of spool data. This value may be overridden by the BYTES parameter on the //*MAIN JES3 job control statement.

C or CANCEL
Specifies that a job whose output exceeds the byte limit is to be canceled without a dump.

D or DUMP
Specifies that a job whose output exceeds the byte limit is to be canceled with a system abend dump.

W or WARNING
Specifies that JES3 issue a warning message and continue processing the job if it exceeds the byte limit. JES3 reissues a warning message for every additional 750,000 (default) bytes the job writes to spool.

mmm or 50
Regulates the frequency that JES3 issues message IAT1600 after exceeding the maximum number bytes (***mmm*** is a percentage of the maximum byte limit). The value you specify must be a multiple of 10 between 10 and 100 inclusive. Specifying too low a value can cause JES3 to flood the system with messages which in turn, can cause a shortage of staging areas and console buffers. To decrease the number of messages issued, use higher values for ***nnnnnn*** and ***mmm***.

If you specify an invalid subparameter, JES3 uses the parameter default.

PAGES=
Specifies the maximum number of pages for a single job, and the action to be taken for any job whose output exceeds the maximum.

nnnnnnnn
Specifies the maximum number of pages for a single job. This value may be overridden by the PAGES parameter on the //*MAIN JES3 job control statement. The specified number must be between 1 and 16777215, inclusive.

C or CANCEL
Specifies that a job whose output exceeds the page limit is to be canceled without a dump.

D or DUMP
Specifies that a job whose output exceeds the page limit is to be canceled with a system abend dump.

W or WARNING
Specifies that JES3 issue a warning message and continue processing the job if it exceeds the page limit. JES3 reissues a warning message for every additional 250 (default) pages that the output exceeds the limit.

mmm or 50
Regulates the frequency that JES3 issues message IAT1600 after exceeding the maximum page limit (***mmm*** is a percentage of the maximum page limit). The value you specify must be a multiple of 10 between 10 and 100 inclusive. Specifying too low a value can cause JES3 to flood the system with messages which in turn, can cause a shortage of staging areas and console buffers. To decrease the number of messages issued, use higher values for ***nnnnnnnn*** and ***mmm***.

If you specify an invalid subparameter, JES3 uses the parameter default.

Example

This example specifies installation default values for information not provided on other JES3 initialization statements or JES3 control statements.

```
STANDARDS,CICNT=5,PRTY=2,FAILURE=PRINT,LINES=(100,W),CARDS=(200,W),
SETUP=NONE,PAGES=(1000,W),BYTES=(1500,W),INTPMID=I1,STCPMID=S1,
TSOPMID=T1,INTPROC=I1,STCPROC=S1,TSOPROC=T1
```

SYSID (Define the Default MVS/BDT Node)

Use the SYSID initialization statement to define the default MVS/Bulk Data Transfer (BDT) node for this JES3 complex. If the JES3 complex includes one or more MVS/BDT facilities (program product 5665-302), you must include this statement in the JES3 initialization stream. JES3 submits MVS/BDT commands and transactions to the MVS/BDT node defined by this statement unless otherwise specified on the command or transaction.

Statement Summary

Table 62. SYSID Summary

Required/Optional Statement	Optional
Statement Default	None
Placement in Initialization Stream	This statement must follow the ENDJSAM statement.
Coding Considerations	Include only one SYSID statement in the JES3 initialization stream.
Security Usage	None
Performance Considerations	None
Initialization Stream Overrides	None

Table 62. SYSID Summary (continued)

Restart or Command Modification	Cold start, warm start, or hot start with refresh for all parameters.

Syntax

```
►►──SYSID──,NAME=nodename──┬──────────────────────────┬──────────────────────────►◄
                           │                ┌─108────┐│
                           └─,CLASS=──┬─msgdest─┬────┘
                                      ├─nnn─────┤
                                      └─S12─────┘
```

Parameters

NAME=
Specifies the name of the default MVS/BDT node. This name must match the node name on a MVS/BDT SYSID initialization statement.

CLASS=
Specifies the routing class information that should be applied to MVS/BDT "system" messages that do not specify routing information. MVS/BDT "system" messages are those issued by MVS/BDT dynamic application programs (DAPs) with no explicit transaction origin id.

If you let this parameter default, routing code 108 will be applied to all MVS/BDT "system" messages. 108 is the routing code equivalent of JES3 Dest Class S12.

This value may be specified as a JES3 destination class or as an MVS routing code. If a routing code is used, nnn specifies a decimal number from 1 through 28, or 41 through 128. Routing codes 29 through 40 are reserved for IBM's use and will be ignored if specified.

SYSOUT (SYSOUT Class Characteristics)

Use the SYSOUT initialization statement to define SYSOUT class characteristics. The SYSOUT statement is required for each JES3 output class that requires other than TYPE=PRINT processing (JES3 initially sets all SYSOUT classes to TYPE=PRINT).

The SYSOUT statement parameters are applicable to all SYSOUT created by JES3.

Also, be aware that if the SYSOUT is associated with an output descriptor that is defined by the OUTPUT JCL statement or TSO OUTDES command, then the output characteristics are merged for SYSOUT on the HOLD queue.

Statement Summary

Table 63. SYSOUT Summary

Required/Optional Statement	Optional
Statement Default	None
Placement in Initialization Stream	This statement must follow the ENDJSAM statement.

Table 63. SYSOUT Summary (continued)

Coding Considerations	If STANDARD is specified for any parameters, JES3 uses the corresponding value from the OUTSERV statement.
Security Usage	Use the FLASH parameter to print security classifications on 3800 printer output. Do not confuse the FLASH security classifications with RACF security labels which can also be printed on job output. If you are using both FLASH and RACF to print security classifications, ensure that their meanings agree and that you do not overlay the security label printed by PSF.
Performance Considerations	None
Initialization Stream Overrides	1. The CARR, CHARS, FLASH, FORMS, MODIFY, STACKER, TRAIN and THRESHLD parameters on this SYSOUT statement override corresponding values on the OUTSERV and DEVICE statements. 2. The TRKGRPS parameter on this SYSOUT statement overrides corresponding values on the CLASS and MAINPROC initialization statements and on the //*MAIN JES3 control statement. 3. If specified, the TRUNC parameter on this SYSOUT statement overrides the corresponding value on the BUFFER initialization statement.
Restart or Command Modification	• Warm start or cold start for all parameters. • Hot start with refresh for all parameters. The SPART parameter has a dependency on the NAME parameter of the SPART statement. During a hot start with refresh, JES3 does not process the SPART statements and uses the SPART statements from the last warm or cold start. If you add a SPART statement during a hot start with refresh, JES3 ignores it and issues error messages if the SYSOUT statement references the SPART statement you attempted to add.

Syntax

```
►►──SYSOUT──,CLASS=outclass──┬──────────────────────────────┬──────────────────────────►
                             └─,CARR=──┬─tapename─┬─┘
                                       └─STANDARD─┘

►──┬──────────────────────────────┬──┬──────────────────────────────┬──────────────────►
   └─,CHARS=──┬─STANDARD─────────┬─┘  └─,CONTROL=──┬─PROGRAM─┬─┘
              │          ┌──,──┐  │                 ├─SINGLE──┤
              └─(──────▼──idn───┘─)─┘                 └─DOUBLE──┘

►──┬──────────────────────────────────────────────────────────────────────────────────┬──►
   │                                   ┌──,──────┐                                    │
   └─,COPIES=──(──┬──────────┬──,──────▼──n───(1)──┘──)─┘
                  └─num──────┘
```

```
►─┬──────────────────────────────────────────────┬──────────────────────────►
  └─,DEST=──┬─devname────────────────────────────┤
            ├─(──┬───────┬──┬─────────┬──)──┤
            │    └─dtype─┘  └─,dgroup─┘     │
            └─nodename──────────────────────┘

►─┬──────────────────────────────────────┬─┬───────────────────────────┬────►
  └─,FLASH=──┬─STANDARD──────────────────┤ └─,FORMS=──┬─formsnam─┬────┘
             └─(──┬────┬──┬──────┬──)────┘            └─STANDARD─┘
                  └─id─┘  └─,cnt─┘

►─┬──────────────────────────────────────────────────┬─┬──────────────────┬─►
  └─,HOLD=──(──┬─────┬──┬─────────┬──┬───────┬──)────┘ └─,INT=──┬─YES─┬───┘
               └─TSO─┘  └─,EXTWTR─┘  └─,3540─┘                  └─NO──┘

►─┬────────────────────────────────────────┬─┬───────────────────┬─┬────────────┬─►
  └─,MODIFY=──┬─STANDARD───────────────────┤ └─,OVFL=──┬─ON──┬───┘ └─,PRTY=nn───┘
              ├─(NONE)─────────────────────┤           └─OFF─┘
              └─(──┬──────┬──┬─────┬──)────┘
                   └─name─┘  ├─(0)─┤
                             ├─(1)─┤
                             ├─(2)─┤
                             └─(3)─┘

►─┬──────────────────────────┬─┬──────────────────────────────┬─────────────►
  └─,SPART=partitionname─────┘ └─,STACKER=──┬─STANDARD─┬──────┘
                                            ├─C────────┤
                                            └─S────────┘

►─┬────────────────────────────┬─┬────────────────────────────────┬─────────►
  └─,TRAIN=──┬─name─────┬──────┘ └─,THRESHLD=──┬─-1───────┬───────┘
             └─STANDARD─┘                      ├─STANDARD─┤
                                               └─limit────┘

►─┬───────────────────────────────────────────────────┬─┬────────────────────┬─►
  └─,TRKGRPS=──(──┬─1──,──2──────────────────┬──)─────┘ └─,TRUNC=──┬─YES─┬───┘
                  ├─prigrps──────────────────┤                     └─NO──┘
                  └─prigrps──,──secgrps──────┘

►─┬─────────────────────────────────────────────┬─┬────────────────────┬────►
  └─,TYPE=──(──┬─USER1,RSVD─────────────┬──)────┘ └─,COMPACT=comptab───┘
               ├─USER2,PUCH─────────────┤
               │       ┌─,PRINT─┐       │
               └─DSISO─┴────────┴───────┘

►─┬──────────────────────────────────┬──────────────────────────────────────►◄
  └─,CHNSIZE=──┬─DS────────────┬─────┘
               ├─nnn───────────┤
               └─(nnn,mmm)─────┘
```

Notes:

1 Maximum of 8.

Parameters

CLASS=
Specifies the SYSOUT class (A-Z,0-9) being defined.

CARR=
Specifies the name (1 to 8 characters) of the carriage tape required to print this SYSOUT class. This parameter overrides the CARRIAGE parameter specified as an installation default on the OUTSERV statement and the CARRIAGE parameter on the DEVICE statement indicating the carriage tape initially mounted. If STANDARD is specified, the carriage tape name is taken from that specified on the OUTSERV initialization statement.

If the device is a 3211, 3203, or 3800 printer, a module must be included in SYS1.IMAGELIB, having the name FCB2xxxx or FCB3xxxx, where xxxx is the 1- to 4-character name of the FCB.

Note: If you are using the user exit IATUX23 and you are coding FCBs for use with JES3 defined printers that are other than 3800, then you must code a CHANNEL 12 in the FCB.

For more information about SYS1.IMAGELIB, see *Data Management*

CHARS=
Specifies the name of the character image to be used in processing this SYSOUT class.

id1-id4
Specifies up to four images to be used for processing this SYSOUT class.

STANDARD
Specifies that the image to be used is as defined by the OUTSERV statement.

CONTROL=
Specifies the type of carriage spacing control required to print this SYSOUT class.

PROGRAM
Specifies that the carriage control character is to be the first character of each logical record in the data set.

SINGLE
Specifies single spacing for the data set.

DOUBLE
Specifies double spacing for the data set.

COPIES=
Specifies the number of copies of each data set to be produced.

num
Specifies the number of copies, from 0 to 255, to be produced for this SYSOUT class. If specified alone, it applies to all printers.

n1-n8
Specifies the number of transmissions of a data set and the number of copies, from 1 to 255, to be produced with each transmission. If n1 is specified, it is applicable only to impact printers. For example, COPIES=(1,5,2,6) produces one copy on an impact printer and three transmissions of the data set to a 3800 printer, where the first transmission will produce five copies, the second will produce two copies, and the third will produce six copies.

DEST=
Specifies the printer or punch to process this SYSOUT class. This parameter indicates the device specifically by name or nonspecifically by device type and/or device group.

devname
Specifies a 1- to 8-character name for the printer or punch. The name must match the JNAME parameter on a DEVICE statement defining this device.

dtype
Specifies a 1- to 8-character device type which matches the DTYPE parameter on a DEVICE statement for a printer or punch. If dtype only is specified, then any device of this type may process the output class. If dtype is specified with dgroup, then any device of that type within the group will process the output class.

dgroup
Specifies a 1- to 8-character device group name which matches the DGROUP parameter on a DEVICE statement for a printer or punch. If dgroup only is specified, then any device in that group may process the output class. If dgroup is specified with dtype, then any device in that group of the specified type will process the output class.

nodename
Specifies a 1- to 8-character name that is the name of the node to which JES3 networking output is directed.

Notes:

1. If the DEST= parameter is omitted, there is no default destination associated with this class.
2. If you specify DEST=(dtype), JES3 assigns LOCAL as the dgroup.

FLASH=
Specifies the name of the forms flash cartridge for a 3800 printer to be used on this SYSOUT class.

id Specifies the name of the forms flash cartridge.

cnt
Specifies the number of consecutive copies the forms flash is to print.

STANDARD
Specifies that the forms flash cartridge to be used was defined in the OUTSERV statement.

FORMS=
Specifies the name of the printer forms or card stock to be used when processing this output class. This parameter overrides the FORMS parameter specified on the OUTSERV or DEVICE statement. If STANDARD is specified, the forms or card stock specification is taken from that specified on the OUTSERV initialization statement.

HOLD=
Specifies that the output data set is to be held for use by a system function.

TSO
Specifies that the data set is to be held for return to a TSO user.

EXTWTR
Specifies that the data set is to be returned to an external writer.

3540
Specifies that the data set is to be returned to the 3540 external writer.

3540
Specifies that the data set is to be returned to the 3540 external writer.

INT=
Specifies whether or not the interpret option is required for punched output.

YES
Indicates that a card punch with the interpret option (device type PUN3525I or 3525M) is to be used. Note that the DEST parameter must include a PUN3525I (or M) punch; otherwise, INT=NO is assumed.

NO
Indicates that the interpret option is not needed.

MODIFY=
Specifies the copy modification module (for 3800) and table reference character to be used for this SYSOUT class.

STANDARD
Specifies the copy modification module to be used as defined by the OUTSERV statement.

name
Specifies the name of the copy modification module to be used (1-4 characters).

NONE
Specifies that no copy modification module is to be used.

0-3
Specifies the table reference character to be used with the copy modification module.

OVFL=
Specifies the overflow option.

ON
Indicates that the printer should eject whenever the end-of-forms indicator is sensed (skips to channel 12).

OFF
Indicate that the forms overflow control is not to be used.

PRTY=
Specifies the priority at which the data set is to enter the output queue. The value may be from 0 to 255.

SPART=
Specifies the spool partition that JES3 is to use when it writes data for this SYSOUT class. To specify the default spool partition, omit this parameter. If you specify a partition name, the name must match the NAME parameter on a SPART statement. If you specify the SPART parameter, you must also specify TYPE=DSISO.

If you specify an undefined partition name, JES3 uses the default spool partition.

STACKER=
Specifies the 3800 stacker in which this SYSOUT class output is to be placed.

STANDARD
Specifies the stacker as defined in the OUTSERV statement.

C Specifies the continuous stacks. If no 3800 has BTS features, STACKER=C is forced.

S Specifies the sheet stacker, where offset stacking takes place.

TRAIN=
Specifies the print train or band required to print this SYSOUT class.

name
Specifies the name of the print train or band. This parameter specification overrides the TRAIN parameters specified on the OUTSERV or DEVICE statements.

STANDARD
Specifies that the value specified on the OUTSERV statement is to be used.

THRESHLD=
Specifies the default maximum size for a SYSOUT data set. The THRESHLD parameter assumes that the data set size is the number of records in the data set multiplied by the number of copies. Data sets that equal or exceed the value specified are queued as separate pieces of work for output service writers. Specifying STANDARD causes the value specified on the OUTSERV statement to be used.

The THRESHLD parameter on the SYSOUT statement overrides the THRESHLD parameter on the OUTSERV statement.

TRKGRPS=
Specifies the number of track groups (as defined by the GRPSZ parameter on the BUFFER or SPART statement) JES3 is to allocate to jobs within this SYSOUT class. For guidelines on how to determine the appropriate value for the TRKGRPS parameter for your installation, see "Determining Track Group Allocation Sizes" in *z/OS JES3 Initialization and Tuning Guide*.

prigrps
Specifies the number of track groups to be initially allocated to jobs in this SYSOUT class. The specified value may be 1 through 9.

secgrps
Specifies the number of track groups to be allocated to jobs in this SYSOUT class subsequent to their primary allocation. JES3 allocates the specified amount of spool space after the job uses up its initial allocation, and again (for an unlimited number of times) when the job uses up each secondary allocation and requests more spool space. The specified value may be 1 through 9. If you specify this parameter, you must also specify the TYPE=DSISO parameter.

If you specify an invalid subparameter, JES3 uses the parameter default.

TRUNC=
Specifies whether or not trailing blanks are to be truncated from SYSOUT data belonging to this SYSOUT class.

YES
Indicates that trailing blanks are to be truncated from SYSOUT data.

NO
Indicates that trailing blanks are not to be truncated from SYSOUT data.

Parameter Default: The default is the value specified on the TRUNC parameter of the BUFFER statement. If the TRUNC parameter is omitted from the BUFFER statement, the default for both parameters is TRUNC=YES.

TYPE=
Specifies the action JES3 takes after a data set in this SYSOUT class is processed. Multiple subparameters must be specified for type DSISO and RSVD data sets if PRINT, PUNCH, or TSO type characteristics are also required. For example, TYPE=(PRINT,DSISO) causes the data set to be printed, but TYPE=DSISO never prints. Omission of the output type subparameter results in the data set becoming lost to output service.

USER1
Specifies that no action is to be taken by JES3 for this class. It is a user responsibility to process data sets in this SYSOUT class.

USER2
Specifies that no action is to be taken by JES3 for this class. It is a user responsibility to process data sets in this SYSOUT class.

DSISO
Specifies that each data set in this class is to have its own track allocation table (TAT). This increases spool utilization because each data set can be purged when the data set processing is complete instead of when the job completes. (Note that the subparameter has no relationship to any other TYPE specification.)

This parameter does not apply to the JESMSGLG, JESJCL, or JESYSMSG data sets. If you specify the SPART or TRKGRPS parameter on this statement, you must also specify the DSISO parameter.

RSVD
Specifies that this is a reserved SYSOUT class. Reserved classes may be used to hold SYSOUT output for TSO. A SYSOUT data set assigned to a reserved class is held for TSO if the MSGCLASS parameter specified for the generating job is also a reserved class.

PUNCH
Specifies that data sets in this SYSOUT class are to be punched.

PRINT
Specifies that data sets in this SYSOUT class are to be printed.

COMPACT=
Specifies the 1- to 8-character name of a compaction table defined to JES3 by the COMPACT initialization statement. Any data set in this SYSOUT class which is sent to a SNA work station (which supports compaction) is compacted using this compaction table instead of the work station default compaction table.

If you omit this parameter, the default compaction table or default compaction table for the work station is used.

CHNSIZE=
Specifies the size of the RU chain to be transmitted to SNA work stations.

DS
Specifies that the entire data set is to be sent as a single chain.

nnn
Specifies the number of pages that the chain is to contain. Control

characters in the data (skip to channel 1 for printers or eject for punches) delimit the page size. The value for nnn can be any number from 1-255.

(nnn,mmm)
Specifies the number of pages (nnn) in the chain and the number of logical records (mmm) in each page. This form of the subparameter allows you to transmit, as a multiple chain, a data set that contains no control characters.

The value for nnn and for mmm can be any number from 1-255.

Notes:

1. If CHNSIZE=DS is specified no output checkpoints will be taken.
2. If you specify nnn or (nnn,mmm), JES3 takes an output checkpoint before each chain is transmitted.
3. CHNSIZE specified on a //*FORMAT statement overrides this specification. CHNSIZE specified on this statement overrides CHNSIZE specified on a DEVICE statement.
4. CHNSIZE=DS gives the best performance, but error conditions detected can not result in a restart from the last checkpoint since checkpoints are not taken.

TRACK (Preformatted Spool Data Set)

Use the TRACK initialization statement to replace a corresponding FORMAT statement in an initialization stream after the spool data set specified by the FORMAT statement has been formatted. The TRACK statement indicates that the corresponding data set has been formatted.

Statement Summary

Table 64. TRACK Summary

Required/Optional Statement	Required
Statement Default	None
Placement in Initialization Stream	This statement must precede the ENDJSAM statement.
Coding Considerations	1. The maximum number of TRACK statements is 1024. 2. The TRACK statement should replace the FORMAT statement after each spool data set has been formatted. The SPART parameter specification on the TRACK statement must match the NAME parameter on a SPART statement.
Security Usage	None
Performance Considerations	None
Initialization Stream Overrides	None

Table 64. TRACK Summary (continued)

Restart or Command Modification	Warm start or cold start for the DDNAME and SPART parameters. Cold start only for the STT and STTL parameters. When warm starting JES3, if the STT or STTL parameter was specified on a FORMAT statement that is being replaced by a track statement. The STT or STTL parameter must also be specified on the TRACK statement. You can also use a warm start to replace FORMAT statements with TRACK statements if the corresponding spool data set is already formatted. Use the `*MODIFY,Q,DD` command to change the SPART parameter.

Syntax

```
►►──TRACK──,DDNAME=ddname──┬──────────────────────────┬──────────────────────────►
                           └─,SPART=partitionname─────┘

►──┬──────────────────────────┬──────────────────────────────────────────────►◄
   ├─,STT=(cylnum,cylnum)─────┤
   └─,STTL=(cylnum,numtrkgps)─┘
```

Parameters

DDNAME=
Specifies the name (1 to 8 characters) of the DD statement that defines the spool data set. Once a spool data set is defined, it must be referred to by the same ddname.

SPART=
Specifies that the spool data set identified by this statement is a member of the named spool partition. The partition name must match a partition name specified on a SPART statement.

To specify that the data set is a member of the default partition, omit this parameter. You must assign at least one spool data set as a member of the default spool partition, or you must allow at least one spool data set to become a member by default. If you fail to do this, JES3 terminates its processing during initialization.

STT=
Specifies the range of cylinders to be allocated to the single track table (STT). This range must be within the extent allocated to the data set. The value of ***cylnum*** specifies an absolute cylinder number. (Absolute cylinder numbers are device-dependent; the component description for the device describes the numbering scheme.)

The range indicated by ***(cylnum,cylnum)*** can be one cylinder (for example: 24,24) or several cylinders (for example: 24,28) and can be in ascending or descending order. JES3 allocates to the STT only those track groups that fall completely within the indicated range of cylinders. The value for ***cylnum*** cannot be 0.

For fixed head devices, allocate cylinders under the fixed heads for better performance. For other devices, allocate cylinders in the center of the data set.

You should consider spool recovery and I/O balance before specifying the STT or STTL parameter. The presence of a single track table on a spool extent can limit the recovery actions that can be taken for that spool extent. To ensure successful recovery in the event of a problem, you should dedicate a spool extent to the STT or specify the STT on the minimum number of spool extents to achieve your I/O balance requirements.

If you omit either the STT or STTL parameter, or you specify an invalid range, JES3 allocates the centermost 2 track groups of each spool data set in the default partition as the initial STT allocation.

Note: If you change this parameter and want the change to go into effect for existing spool data sets, you must perform a cold start.

STTL=

Specifies the location and number of track groups to allocate to the single track table (STT). These track groups must be within the extent allocated to the data set. The value for ***cylnum*** specifies an absolute cylinder number indicating the beginning cylinder number of the STT allocation in this extent. (Absolute cylinder numbers are device-dependent; the component description for the device describes the numbering scheme.) The value for ***numtrkgps*** specifies the number of track groups to allocate to this extent, beginning with the first track group that is located completely in cylinder ***cylnum***. The maximum number of track groups that may be allocated to the STT is 9999.

For fixed head devices, allocate cylinders under the fixed heads for better performance. For other devices, allocate cylinders in the center of the data set.

You should consider spool recovery and I/O balance before specifying the STT or STTL parameter. The presence of a single track table on a spool extent can limit the recovery actions that can be taken for that spool extent. To ensure successful recovery in the event of a problem, you should dedicate a spool extent to the STT or specify the STT on the minimum number of spool extents to achieve your I/O balance requirements.

If you omit either the STT or STTL parameter, or you specify an invalid range, JES3 allocates the centermost 2 track groups of each spool data set in the default partition as the initial STT allocation.

Note: If you change this parameter and want the change to go into effect for existing spool data sets, you must perform a cold start.

Example

The following example shows how two spool data sets are specified on TRACK statements and on DD statements in the JES3 procedure.

Track statements:

```
TRACK,DDNAME=SPOOL1
TRACK,DDNAME=SPOOL2
```

Associated DD statements in the JES3 procedure:

```
//SPOOL1 DD DSN=JES3.QUES1,DISP=OLD,UNIT=3330,
VOL=SER=MVSRW1
//SPOOL2 DD DSN=JES3.QUES2,DISP=OLD,UNIT=3330,
VOL=SER=MVSRW2
```

Appendix A. Work Selection for JES3

This table summarizes the ways you specify work selection in JES3. The table assumes that you have established intital WS= settings using the JES3 initialization statements, OUTSERV and DEVICE. The table illustrates the ways you can code JCL to obtain the work selection you desire.

JES3 Work Selection Processing Summary

Table 65. JES3 Work Selection Processing Summary

WS=	Meaning	JCL Source Examples

C	Carriage tape or FCB (printers only)	• DD Statement
		`//DD1 DD UNIT=3211,FCB=(IMG1,VERIFY)`
		`//DD2 DD SYSOUT=A,FCB=IMG2`
		`//DD3 DD UNIT=3211,FCB=(6,ALIGN)`
		• OUTPUT Statement
		`//OUTDS1 OUTPUT FCB=AA33`
		• //*FORMAT Statement
		`//*FORMAT PR,DDNAME=DDX,FCB=IMG1`
		`//DDX DD SYSOUT=A`

CL	SYSOUT Class	• DD Statement
		`//DDX DD SYSOUT=A`
		• OUTPUT Statement
		`//OUTDS6 OUTPUT CLASS=D`
		`//OUT1 DD SYSOUT=(,),OUTPUT=*.OUTDS6`

CM	Copy Modification (3800 Printer Only)	• DD Statement
		`//DDX DD UNIT=3800,MODIFY=(MYMOD,0),CHARS=(GS15,GS10)`
		• OUTPUT Statement
		`//OUTDS6 OUTPUT CHARS=(GT12,GB12,GI12),MODIFY=(MYMOD,2)`
		• //*FORMAT Statement
		`//*FORMAT PR,DDNAME=DDX,MODIFY=(MYMOD,2)`
		`//DDX DD SYSOUT=T`

D	Data Set Destination	• DD Statement
		`//ANKARA DD SYSOUT=K,DEST=RMT333`
		• OUTPUT Statement
		`//OUTDS6 OUTPUT DEST=R444`
		`//OUT1 DD SYSOUT=(,),OUTPUT=*.OUTDS6`
		• //*FORMAT Statement
		`//*FORMAT PR,DDNAME=DDX,DEST=ROME`
		`//DDX DD SYSOUT=T`

© Copyright IBM Corp. 1988, 2002

Table 65. JES3 Work Selection Processing Summary (continued)

WS=	Meaning	JCL Source Examples

F	Forms Requested	• DD Statement
		`//SYSPRINT DD SYSOUT=(K,,4PRT)`
		• OUTPUT Statement
		`//OUTDS6 OUTPUT FORMS=ACCT4010`
		`//OUT1 DD SYSOUT=(,),OUTPUT=*.OUTDS6`
		• //*FORMAT Statement
		`//*FORMAT PR,DDNAME=DDX,FORMS=ACCT4010`

FL	Flash (3800 Printer Only)	• DD Statement
		`//SYSPRINT DD SYSOUT=K,COPIES=10,FLASH=(ABCD,5)`
		• OUTPUT Statement
		`//OUTDS6 OUTPUT FORMS=ACCT4010,FLASH=STANDARD`
		`//OUT1 DD SYSOUT=(,),OUTPUT=*.OUTDS6`
		• //*FORMAT Statement
		`//*FORMAT PR,DDNAME=DDX,FORMS=ACCT4010,FLASH=STANDARD`

L	Limit Scheduling (line, page or record)	Not Applicable

SS	Stacker (3800 Printer Only)	• DD Statement
		`//SYSPRINT DD SYSOUT=K,BURST=Y`
		• OUTPUT Statement
		`//OUTDS6 OUTPUT BURST=Y`
		`//OUT1 DD SYSOUT=(,),OUTPUT=*.OUTDS6`
		• //*FORMAT Statement
		`//*FORMAT PR,DDNAME=DDX,FORMS=ACCT4010,STACKER=S`

P	Data Set Priority	• DD Statement derived from job's priority
		• OUTPUT Statement
		`//OUTDS6 OUTPUT PRTY=200`
		`//OUT1 DD SYSOUT=(,),OUTPUT=*.OUTDS6`

PM	Processing Mode	• OUTPUT Statement
		`//OUTDS6 OUTPUT PRMODE=PAGE`
		`//OUT1 DD SYSOUT=(,),OUTPUT=*.OUTDS6`

T	Specific Device Type Requested	The parameter is derived from the SYSOUT class definition (PRT, PUN, etc.). You can specified the specific device type on the OUT= parameter in calling some JES3 DSPs.

Table 65. JES3 Work Selection Processing Summary (continued)

WS=	Meaning	JCL Source Examples

U	Train Image UCS (3525 printer or 3800 character arrangement)	• DD Statement
		`//SYSPRINT  DD SYSOUT=K,UCS=PN`
		or
		`//SYSPRINT  DD SYSOUT=K,CHARS=GS14`
		• OUTPUT Statement
		`//OUTDS6 OUTPUT UCS=PN`
		`//OUT1  DD  SYSOUT=(,),OUTPUT=*.OUTDS6`
		or
		`//OUTDS6 OUTPUT CHARS=GS14`
		`//OUT1  DD  SYSOUT=(,),OUTPUT=*.OUTDS6`
		• //*FORMAT Statement
		`//*FORMAT PR,DDNAME=DDX,TRAIN=STANDARD`
		or
		`//*FORMAT PR,DDAME=DDX,CHARS=GS14`

Appendix B. Accessibility

Accessibility features help a user who has a physical disability, such as restricted mobility or limited vision, to use software products successfully. The major accessibility features in z/OS enable users to:

- Use assistive technologies such as screen-readers and screen magnifier software
- Operate specific or equivalent features using only the keyboard
- Customize display attributes such as color, contrast, and font size

Using assistive technologies

Assistive technology products, such as screen-readers, function with the user interfaces found in z/OS. Consult the assistive technology documentation for specific information when using it to access z/OS interfaces.

Keyboard navigation of the user interface

Users can access z/OS user interfaces using TSO/E or ISPF. Refer to *z/OS TSO/E Primer*, *z/OS TSO/E User's Guide*, and *z/OS ISPF User's Guide Volume I* for information about accessing TSO/E and ISPF interfaces. These guides describe how to use TSO/E and ISPF, including the use of keyboard shortcuts or function keys (PF keys). Each guide includes the default settings for the PF keys and explains how to modify their functions.

© Copyright IBM Corp. 1988, 2002

Notices

This information was developed for products and services offered in the U.S.A. IBM may not offer the products, services, or features discussed in this document in other countries. Consult your local IBM representative for information on the products and services currently available in your area. Any reference to an IBM product, program, or service is not intended to state or imply that only that IBM product, program, or service may be used. Any functionally equivalent product, program, or service that does not infringe any IBM intellectual property right may be used instead. However, it is the user's responsibility to evaluate and verify the operation of any non-IBM product, program, or service.

IBM may have patents or pending patent applications covering subject matter described in this document. The furnishing of this document does not give you any license to these patents. You can send license inquiries, in writing, to:

IBM Director of Licensing
IBM Corporation
North Castle Drive
Armonk, NY 10504-1785
USA

For license inquiries regarding double-byte (DBCS) information, contact the IBM Intellectual Property Department in your country or send inquiries, in writing, to:

IBM World Trade Asia Corporation
Licensing
2-31 Roppongi 3-chome, Minato-ku
Tokyo 106, Japan

The following paragraph does not apply to the United Kingdom or any other country where such provisions are inconsistent with local law:
INTERNATIONAL BUSINESS MACHINES CORPORATION PROVIDES THIS DOCUMENT "AS IS" WITHOUT WARRANTY OF ANY KIND, EITHER EXPRESS OR IMPLIED, INCLUDING, BUT NOT LIMITED TO, THE IMPLIED WARRANTIES OF NON-INFRINGEMENT, MERCHANTABILITY OR FITNESS FOR A PARTICULAR PURPOSE. Some states do not allow disclaimer of express or implied warranties in certain transactions, therefore, this statement may not apply to you.

This information could include technical inaccuracies or typographical errors. Changes are periodically made to the information herein; these changes will be incorporated in new editions of the document. IBM may make improvements and/or changes in the product(s) and/or the program(s) described in this document at any time without notice.

Any references in this information to non-IBM Web sites are provided for convenience only and do not in any manner serve as an endorsement of those Web sites. The materials at those Web sites are not part of the materials for this IBM product and use of those Web sites is at your own risk.

IBM may use or distribute any of the information you supply in any way it believes appropriate without incurring any obligation to you.

© Copyright IBM Corp. 1988, 2002

Licensees of this program who wish to have information about it for the purpose of enabling: (i) the exchange of information between independently created programs and other programs (including this one) and (ii) the mutual use of the information which has been exchanged, should contact:

IBM Corporation
Mail Station P300
2455 South Road
Poughkeepsie, NY 12601-5400
USA

Such information may be available, subject to appropriate terms and conditions, including in some cases, payment of a fee.

The licensed program described in this information and all licensed material available for it are provided by IBM under terms of the IBM Customer Agreement, IBM International Program License Agreement, or any equivalent agreement between us.

This information contains examples of data and reports used in daily business operations. To illustrate them as completely as possible, the examples include the names of individuals, companies, brands, and products. All of these names are fictitious and any similarity to the names and addresses used by an actual business enterprise is entirely coincidental.

COPYRIGHT LICENSE:

This information contains sample application programs in source language, which illustrates programming techniques on various operating platforms. You may copy, modify, and distribute these sample programs in any form without payment to IBM, for the purposes of developing, using, marketing or distributing application programs conforming to the application programming interface for the operating platform for which the sample programs are written. These examples have not been thoroughly tested under all conditions. IBM, therefore, cannot guarantee or imply reliability, serviceability, or function of these programs. You may copy, modify, and distribute these sample programs in any form without payment to IBM for the purposes of developing, using, marketing, or distributing application programs conforming to IBM's application programming interfaces.

If you are viewing this information softcopy, the photographs and color illustrations may not appear.

Programming Interface Information

This document is intended to help the customer diagnose the JES3 element of z/OS. It documents information which is Diagnosis, Modification and Tuning Information provided by the JES3 element of z/OS.

Attention: Do not use this Diagnosis, Modification and Tuning Information as a programming interface.

Trademarks

The following terms are trademarks of Internation Business Machines Corporation in the United States, or other countries, or both:
- AFP
- IBM

- IBMLink
- MVS/ESA
- OS/390
- Print Services Facility (PSF)
- RACF
- Resource Link
- S/390
- System/360
- System/370
- System/390
- VTAM
- z/OS
- z/OS.e
- 3090

Other company, product, or service names may be trademarks or service marks of others.

Glossary

This glossary defines technical terms and abbreviations used in JES3 documentation. If you do not find the term you are looking for, refer to the index of the appropriate JES3 manual or view *IBM Glossary of Computing Terms*, located at:

www.ibm.com/ibm/terminology

This glossary includes terms and definitions from:

American National Standard Dictionary for Information Systems, ANSI X3.172-1990, copyright 1990 by the American National Standards Institute (ANSI). Copies may be purchased from the American National Standards Institute, 11 West 42nd Street, New York, New York 10036. Definitions are identified by an asterisk (*) that appears between the term and the beginning of the definition; a single definition taken from ANSI is identified by an asterisk after the item number for that definition.

A

action message. A request for operator intervention from the operating system. In JES3, action messages are typically displayed on the operator's console.

address space. The virtual storage assigned to a job, TSO user, or a task initiated by the START command. Each address space consists of the same range of addresses.

Advanced Function Presentation (AFP). A set of licensed programs, together with user applications, that use the all-points-addressable concept to print on presentation devices. AFP includes creating, formatting, archiving, retrieving, viewing, distributing, and printing information. See *presentation device*.

Advanced Program-to-Program Communication (APPC). A set of inter-program communication services that support distributed transaction processing in a SNA network. See also *logical unit type 6.2*.

AFP. See *Advanced Function Presentation*.

all points addressability. The ability to address, reference, and position text, overlays, and images at any defined position or pel on the printable area of the paper. This capability depends on the ability of the hardware to address and to display each picture element.

APA. See *all points addressability*.

APPC. See *Advanced Program-to-Program Communication*.

APPC/VTAM. The implementation of APPC on VTAM.

auxiliary task. A subtask under the JES3 primary task. Writer DSPs and the General Services DSP do some of their processing under this task.

auxiliary task control block (ATCB). A control block that JES3 uses to manage work done under the auxiliary task.

auxiliary task dispatching element (ATDE). A control block that JES3 uses to determine whether to dispatch a function control table (FCT) under the JES3 auxiliary task.

B

binary synchronous communication (BSC). (1) Communication using binary synchronous transmissions. (2) A uniform procedure, using a standardized set of control characters and control character sequences, for synchronous transmission of binary-coded data between stations.

binary synchronous communications remote job processing (BSC RJP). A facility that permits the input and output of jobs to and from BSC workstations.

Bulk Data Transfer (MVS/BDT). (Multiple Virtual Storage/Bulk Data Transfer) An IBM program product that uses SNA protocols to copy sequential or partitioned data sets within an SNA network.

C

call. See *communication call*.

called job. A job created by JES3 in response to a JES3 CALL command.

called DSP. A job created by JES3 in response to a JES3 *CALL command.

channel-to-channel (CTC) adapter. A device for connecting two channels on the same processor or on different processors.

cold start. For JES3, the first start after system generation and after some unrecoverable failures. Spool data sets are initialized during a cold start.

© Copyright IBM Corp. 1988, 2002

common area. In MVS, an area of virtual storage that is addressable by all address spaces.

Common Programming Interface. Provides languages, commands and calls that allow the development of applications that are more easily integrated and moved across environments supported by Systems Application Architecture.

common service area (CSA). In MVS, a part of the common area that contains data areas accessible from all address spaces.

communication call. A conversation statement that transaction programs can issue to communicate through the LU 6.2 protocol boundary. The specific calls that a transaction program can issue are determined by the program's current conversation state. See also *verb*.

configuration. The arrangement of a computer system or network as defined by the nature, number, and chief characteristics of its functional units.

console authority level. A numeric value from 0-15 assigned to RJP consoles which governs the set of commands that can be issued from the console.

console destination classes. A set of named classes used by JES3 to direct messages to certain consoles. Also used in specifying the messages to be received at an RJP console.

control section (CSECT). The part of a program specified by the programmer to be a relocatable unit, all elements of which are to be loaded into adjoining main storage locations.

console service. A DSP that performs traffic management for consoles.

control statements. Statements placed into an input stream to identify special JES3 processing options for jobs.

converter/interpreter (C/I) DSP. A DSP that uses MVS converter/interpreter subroutines to process JCL statements. The C/I DSP creates internal JCL text for jobs being readied for MVS execution.

CPI. See *Common Programming Interface*.

CPU. Central processing unit (equivalent to the term **processor**.

CTC. Channel-to-channel.

D

data link. The physical connection and the connection protocols between a host and a communication controller nodes by using the host data channel.

DC. Dump core.

DDR. Dynamic device reconfiguration.

deadline scheduling. A method of scheduling jobs by time of day, or by week, month, or year.

deferred-printing mode. A printing mode that spools output through JES to a data set instead of printing it immediately. Output is controlled by JCL statements.

demand select job. A job created by MVS and passed to JES3 for processing. MVS creates demand select jobs in response to MVS START or MOUNT commands or the TSO LOGON command. (For processing of these commands, system resources are needed, hence JCL is used to define those resources. It is this JCL that JES3 processes.)

destination queue (DSQ). For JES3, a control block used by subsystem interface routines to route requests (represented by destination codes) to the JES3 routines responsible for servicing the requests.

dependent job control (DJC). The organizing of a collection of jobs that must execute in a specific order. DJC manages jobs that are dependent upon one another.

destination codes. For JES3, numeric codes used to represent information during communication between JES3 components on different processors by using the subsystem interface.

device fencing. Reserving devices for use only by jobs within a specified job group, or jobs with a specified job network.

DJ. Dump job.

DJC. Dependent job control.

DJC network. A set of jobs that JES3 must run in a predetermined order. Success or failure of one job can cause execution, holding, or cancelation of other jobs.

DR. Disk reader.

DSI. Dynamic system interchange.

dump job (DJ). A JES3 dynamic support program, invoked by operator command to write JES3 jobs to tape and later to restore them back to JES3 by reading them from tape back into the system.

dyadic. A multiprocessor that contains two CPUs (hardware term that is not normally used in software documentation).

dynamic destination queuing. The facility that allows the separate queueing of staging areas received by the JES3 global address space from the FSS address space.

dynamic allocation. For JES3, assignment of system resources to a job while it is executing rather than before it is executed.

dynamic device reconfiguration (DDR). A facility that allows a demountable volume to be moved, and repositioned if necessary, without abnormally terminating the job or repeating the initial program load procedure.

dynamic support program (DSP). Multiprogrammed JES3 system components that are scheduled by JSS and cause the implementation of some function of JES3. DSPs can be directly related to job execution (e.g., main service, output service) or can be a background utility such as card-to-tape.

dynamic system interchange (DSI). A JES3 recovery facility that allows the operator to switch the JES3 global functions to a local processor in case of global processor failure.

dynamic writer. An output service function that controls printing or punching of data sets with characteristics that are not assigned to a specific device but are assigned by JES3 to appropriate devices as they become available.

E

early resource release. The releasing of resources (devices, volumes, and data sets) after they are no longer needed.

explicit setup. The programmer's specification, on a JES3 control statement, of precisely which devices are to be set up.

external writer. An MVS routine that directs system output to unsupported devices such as unit record printers and punches, magnetic tape devices, DASD, and plotters. External writers must be started by the operator as required. Once started, an external writer requests output data sets from the JES3 output service DSP via the subsystem interface.

F

FCB. Forms control buffer.

full function mode. The state that permits a printer to produce page-mode output.

function codes. Numeric codes used by MVS when requesting a service or control information from JES3 by using the subsystem interface.

function control table (FCT). The master dispatching queue for JES3. Entries in the FCT are arranged in priority order and each represents a DSP to be dispatched.

functional subsystem (FSS). A functional subsystem performs JES3 functions on behalf of the JES3 global address space while residing in its own address space, which may be on any processor in the complex. The functional subsystem off-loads some of the work from the JES3 address space.

functional subsystem application (FSA). Contained within the functional subsystem address space, these routines handle a specific piece of JES3 work normally done by the JES3 global processor.

functional subsystem intercommunication (FSI). Provides formal communication between JES3 and the functional subsystem application or FSS.

G

generalized main scheduling (GMS). A set of algorithms that allow the JES3 system programmer to tailor job scheduling and selection to the specific needs of the installation.

global processor. The processor that controls job scheduling and device allocation for a complex of processors. See also **local processor**.

global main (and local mains). The **global main** controls job scheduling and device allocation for a complex of JES3 processors. Each **local main** in the complex exists under control of the JES3 global main and is connected to the global main by CTC adapters. The JES3 on the global main can perform centralized job input, job scheduling, and job output services. Only the global main performs scheduling functions, although scheduled work executes on the local mains. See also **local main**.

GMS. Generalized main scheduling.

H

high watermark setup (HWS). An attempt to allocate a minimum number of unique device types that fulfill the requirements for each job step. Devices used in one step can be released and used again in later steps.

hot start. A restart of the global processor using information obtained from the last set of initialization statements processed. Recovery is attempted for all jobs that were in execution at the time of the failure.

hot start with analysis. A special form of hot start where the JES3 job queue is examined and the operator is given the opportunity to delete any jobs that would cause another restart.

hot start with refresh. A special form of hot start where the JES3 initialization stream is read.

hot writer. An output writer that must be started and stopped by the operator. Hot writers are typically used when operator intervention is anticipated (as for changing forms, etc.).

I

initialization. In JES3, the process that reads the JES3 initialization statements and creates the tables and control blocks used throughout the JES3 program.

input service. The function that accepts and queues all jobs, entering the JES system, except those invoked via the *CALL command.

input service driver (ISDRVR) DSP. A DSP that reads batches of jobs from the spool data set and constructs a separate JCT entry for each job.

input service job. A job created by the card, tape, or disk reader DSP for each batch job written on the spool data set. An input service job is represented by a JCT containing two scheduler elements: one for the ISDRVR DSP and one for the PURGE DSP.

installation exit. A part of JES3 specifically designed for replacement by user-written routines.

internal reader. A JES3 routine that processes input streams contained in SYSOUT data sets obtained from MVS.

IPL. Initial program load.

J

JCL. See *Job Control Language*.

JECL. See *Job Entry Control Language*.

JES control table (JESCT). A control block in the MVS nucleus that contains information used by subsystem interface routines.

JES managed. The system mode of operation where JES3 batch initiators are controlled by JES3.

JES2. A subsystem that receives jobs into the MVS system and processes all output produced by the jobs. In multiple-processor complexes, the JES2 program manages independently-operating processors via a common job queue.

JES3. A subsystem that receives jobs into the MVS system, optionally schedules resources for the jobs, and processes output data produced by the jobs. In multiple-processor complexes, the JES3 program manages processors so that one processor exercises centralized control over the others and distributes jobs to the others by a common job queue.

JES3 auxiliary address space. An address space used exclusively by JES3 for data areas that would otherwise be placed into the CSA. Parameters in JES3 initialization statements specify whether a JES3 auxiliary address space is desired and, if so, the size of each data area.

JES3 devices. The devices that JES3 uses to communicate with the operator, read jobs, store jobs awaiting execution, and write job output. See also *shared devices.*

JES3-managed devices. The devices that JES3 allocates to jobs. See also *MVS-managed devices, jointly-managed devices, shared devices.*

JES3 spool access method (JSAM). Data management routines that serve JES3 address space requests such as allocation and deallocation of JES3 buffers.

job class. A named collection of JES3 job processing and scheduling rules. Use of job class names on JES3 control statements is a way of specifying what job processing and scheduling rules JES3 should use for jobs.

job class group. A named collection of resources to be associated with a job class. Use of job class names on JES3 control statements is a way of specifying what resources will be needed for jobs.

job control table (JCT). A table into which one entry is placed for each job that JES3 is to process. Entries are arranged in the JCT in job priority order to facilitate later job selection by priority.

job control table (JCT) entry. A control block into which JES3 places the description of a job to be processed, and scheduler elements representing the DSPs needed to process the job.

Job Control Language (JCL). A problem-oriented language designed to express statements in a job that identify the job or describe its requirements to an operating system.

Job Entry Control Language (JECL). A problem-oriented language designed to express statements in a job that describe its requirements to an operating system's job entry subsystem.

job ID. An 8-character identifier used by JES3 to uniquely identify any job in a JES3 complex at any moment in time. The job identifier is of the form "JOBnnnnn" where nnnnn is the job *number* with the appropriate number of leading zeroes, if the job number is 99,999 or less. Otherwise, the job identifier is of the form "Jnnnnnnn", where nnnnnnn is the job number with the appropriate number of leading zeroes.

job number. A unique number assigned to a job by JES3. To create a job ID, JES3 adds the letters JOB in front of the job number if the job number is 99,999 or

less; otherwise the job number is left padded with zeroes up to seven digits and the letter J is added in front of this number.

job queue element (JQE). A control block containing a summary of information from a JCT entry. JQEs remain in storage and are used by JES3 instead of JCT entries for scheduling of work.

job segment scheduler (JSS) DSP. A DSP that scans the job control table (JCT) to locate scheduler elements eligible for processing, and then builds function control table (FCT) entries so the corresponding DSPs can be dispatched. JSS itself is represented by an FCT entry.

job summary table (JST). A table into which the converter/interpreter DSP places job setup requirements.

job validation. The process during JES3 initialization where JES3 examines the job-related spool control blocks to verify their validity. If JES3 finds incorrect control blocks, JES3 gives the system operator an opportunity to take corrective action to insure that JES3 initialization completes.

job volume table (JVT). A table into which the converter/interpreter DSP places the volume information it obtains from data definition (DD) statements.

jointly-managed devices. A special case where the same device is both a JES3-managed device and an MVS-managed device. Only direct-access devices with volumes that cannot be physically removed can be jointly-managed devices.

JSAM. See *JES3 Spool Access Method*.

L

line mode. A type of data with format controls that only allow a printer to format data as a line.

line mode data. A type of data that is formatted on a physical page by a printer only as a single line.

local console. Any console that is dedicated to a single main within a JES3 installation. A remote job processing console cannot be a local console.

local device. A device attached to a host processor by using a channel.

local main. In a complex of processors under control of JES3, a processor connected to the global main by a CTC adapter, for which JES3 performs centralized job input, job scheduling and job output services by the global main.

local start. A restart of a local processor. Initialization is unnecessary and user jobs are not affected.

logical storage. The amount of central storage required by a job or a job step to execute efficiently on a processor when running under JES3.

loosely-coupled multiprocessing. Two or more computing systems interconnected by an I/O channel-to-channel adapter. The processors can be of different types and have their own unique configurations.

logical unit. 1) a type of network addressable unit that enables end users to communicate with each other and gain access to network resources. 2) A port providing formatting, state synchronization, and other high-level services through which an end user communicates with another end user over an SNA network.

logical unit type 6.2. The SNA logical unit type that supports general communication between programs in a distributed printing environment; the SNA logical unit type on which CPI communications is built.

LU. See *logical unit*.

M

main. A processor named by a JES3 MAINPROC initialization statement, on which jobs can execute; represents a single instance of MVS. The two types of mains are (1) global main, and (2) local main.

MAINPROC. A JES3 initialization statement that defines a processor to JES3.

main device scheduler (MDS). Controls the setup of I/O devices associated with job execution.

main device scheduler (MDS). A phase of JES3 that controls the setup of I/O devices associated with job execution.

main DSP. A DSP that chooses jobs and supplies them to the MVS initiator(s).

main service. A dynamic support program that schedules problem programs for execution and manages the flow of data (system input, print, and punch) across the channel-to-channel adapter to and from the global processor.

MDS. Main device scheduler.

migration. The changing over from an installation's production operating system to an upgraded or entirely new operating system.

multifunction monitor (MFM). The master dispatcher for JES3. The MFM scans the function control table (FCT) for DSPs ready to be executed, and causes execution to begin.

multiple console support (MCS). A feature of MVS that permits selective message routing of up to 99 operator's consoles.

multiple virtual storage (MVS). A virtual storage facility that allows each user a private address space.

multiprocessing system. A computing system employing two or more interconnected processing units to execute program simultaneously.

multiprocessor. A processor complex that consists of more than one CPU.

MVS. See *Multiple Virtual Storage*.

MVS/APPC. The implementation of APPC on an MVS system.

MVS-managed devices. The devices that MVS allocates to jobs. See also *JES3-managed devices, jointly-managed devices.*

N

network. For JES3, two or more systems and the connections over which jobs and data are distributed to the systems. One or more of the systems can be a JES3 global (and its local mains, if any). The other systems can be non-JES3 systems with compatible networking facilities. Connections can be established through communications paths using SNA or BSC protocol.

network job entry (NJE). The process in which a user at one installation can submit a job/output to be executed at or sent to a different installation (node to node). NJE is networking between installations using SNA or BSC protocol.

network job stream. A network job stream includes:
- a job header
- an MVS job comprised of JCL an/or SYSIN data
- a job trailer.

See also the definition of network SYSOUT stream.

network stream. A network stream contains either a network job stream or a network SYSOUT stream. See the respective definitions for each.

network job. Same as network stream.

network SYSOUT stream. A network SYSOUT stream includes:
- a job header
- a data set header (where there may be more than one data set header per SYSOUT data set transmitted)
- a SYSOUT data set
- a job trailer.

Note: There may be more than one SYSOUT data set-data set header pair. See also the definition of network job stream.

networking protocol. Rules for using communication lines. Protocols can identify the direction of data flow, where data begins and ends, how much data is being transmitted, and whether data or control information is being sent. The two protocols that JES3 uses to establish a networking environment are binary synchronous communication (BSC) and systems network architecture (SNA).

NJE. An installation to installation data communication network.

node. 1) An end point of a link, or a junction common to two or more links in a network. Nodes can be processors, controllers, or workstations. Nodes can vary in routing and other functional capabilities. 2) In JES3, one of the systems in a network of systems connected by communication lines. Each node defined to itself is the home node. All others are defined as remote nodes, directly or indirectly connected. The home node and the remote nodes are identified as such in the installation's initialization stream (NJERMT statement).

non-partitionable processor complex. A processor complex that cannot be partitioned.

non-standard job. A job for which JES3 defines processing from input received on //*PROCESS control statements.

normal job. A job received by JES3 in an input stream. Normal jobs can be standard jobs or nonstandard jobs. Contrast with "called job".

O

operating system. The software that controls the operation of a processor complex.

operator commands. Statements that system operators may use to get information, alter operations, initiate new operations, or terminate operations.

operator messages. A message from an operating system directing the operator to perform a specific function, such as mounting a tape reel; or informing the operator of specific conditions within the system, such as an error condition.

output scheduling element (OSE). A control block that describes the characteristics of one or more output data sets of the same job.

output service. The function that processes SYSOUT data sets. Processing includes printing, punching, or directing output to an external writer.

output service (OUTSERV) DSP. A DSP that schedules output writers for printers or punches, and

routes output data to TSO processor, MVS external writers, and the MVS internal reader.

output writer. A JES3 routine that transcribes output data sets to the printer or punch system output devices.

P

page mode. The mode of operation in which the AFP print (such as the 3800 Printing Subsystem) can accept a page of data from a host processor to be printed on an all points addressable output medium.

page mode data. A type of data that can be formatted anywhere on a physical page. This data requires specialized processing such as provided by the Print Services Facility for AFP printers, such as the 3800-3 and 3820.

page mode printer. An AFP printer ,such as the 3800 model 3 and 3820, that can print page-mode data.

partition. Equivalent to the term **physical partition**.

partitionable processor complex. A processor complex that can be partitioned.

partitioned mode. Equivalent to the term **physically partitioned mode**.

partitioning. The process of forming multiple physical partitions from one processor complex.

physical partition. A set of hardware resources, formed by partitioning, that can support a single operating system.

pel. Picture element

physically partitioned mode. The state of a processor complex when its hardware resources are divided into multiple configurations.

pre-execution setup. That portion of setup performed by MDS prior to a job entering execution.

presentation device. A device that produces character shapes, graphics pictures, images, or bar code symbols on a physical medium. Examples of physical media are display screens, paper, foils, microfilm, and labels.

primary job entry subsystem. The active job entry subsystem. The primary job entry subsystem is determined during the system generation process.

primary task. The task under which most DSPs execute.

Print Services Facility (PSF). An IBM licensed program that produces printer commands from the data set to it. PSF programs run on the z/OS, OS/390, MVS, VM, VSE, OS/2, AIX, and OS/400 operating platforms. For JES, PSF programs operate the 3800 model 3 and 3820 printers. PSF operates as a functional subsystem.

process SYSOUT (PSO). An interface to JES3 to allow access and control of SYSOUT data sets from other address spaces. It is used primarily by TSO OUTPUT and RECEIVE commands and external writers.

processor. A hardware unit that contains software to interpret and process instructions.

processor complex. The maximum set of hardware resources that support a single operating system.

protected buffer pool (PBUF). An area in the common storage area and JES3 auxiliary address space that has been divided into buffers.

protocol. The meaning of, and the sequencing rules for, requests and responses used for managing a network, transferring data, and synchronizing the states of network components.

purge DSP. A DSP that performs post-execution removal a job from the system, writes system management facilities (SMF) records, and frees spool space used by the job.

R

RACF. Resource Access Control Facility

reader DSP. A DSP that transfers a job's control statements and SYSIN data from an input device to the spool data set. Three types of readers exist: card reader, tape reader, and disk reader.

reader job. A called job created by JES3 each time the operator issues a CALL command for a card, tape, or disk reader.

reconfiguration. The process of adding hardware units to, or removing hardware units from, a configuration.

remote device. A device attached to a host processor by using a data link.

remote job entry (RJE). A process in which a user at a remote site is connected to the host system by a data link (telecommunication lines). RJE and RJP is networking between the user and the host system.

remote job processing (RJP). A facility that permits the input, processing, and output of jobs to and from terminals remote from the JES3 installation.

RJP. Remote job processing.

remote terminal processor (RTP). A programmable remote workstation.

resident queue (RESQUEUE). A control block built in storage by the job segment scheduler to represent a scheduler element during the life of the scheduler element. It contains status information and queuing pointers.

Resource Access Control Facility (RACF). An IBM program product that provides for access control by identifying and verifying users to the system, authorizing and logging access to protected resources, and logging detected unauthorized attempts to enter the system.

RMT. Remote terminal processor program.

remote terminal processor (RMT). A self-loading object deck created as a result of an RMT generation. RTP programs allow JES3 to communicate with programmable remote workstations.

routing code. An MVS identifier that you use to route MVS messages to a specific console(s).

RTAM. Remote terminal access method.

RTP. Remote terminal processor.

S

SAA. See *Systems Application Architecture*.

scheduler element. A part of a job control table (JCT) entry. (Each JCT entry may contain multiple scheduler elements.) Each scheduler element represents one or more DSPs needed for JES3 processing of a job.

scheduling environment. A list of resource names along with their required states. If an MVS image satisfies all of the requirements in the scheduling environment associated with a given unit of work, then that unit of work can be assigned to that MVS image. If any of the requirements are not satisfied, then that unit of work cannot be assigned to that MVS image.

service class. A group of work which has the same performance goals, resource requirements, or business importance. For workload management, you assign a service goal and optionally a resource group to a service class.

server mode. A processing mode of the JES3 dump job function that runs in its own address space and can utilize any tape devices in the system.

session. A logical connection between two logical units that can be activated, tailored to provide various protocols, and deactivated as requested.

setup. The phase of JES3 processing that performs volume fetch, device, volume, and dataset allocation.

setup DSP. A DSP that performs volume fetch, job setup, high watermark setup, and explicit setup functions.

shared devices. (1) Devices that are connected to more than one processor. (2) Devices that are both JES3 devices and JES3-managed devices.

side. Equivalent to the term **physical partition**.

single-image mode. The state of a processor complex when all of its hardware resources are in a single configuration.

SNA. See *Systems Network Architecture*.

solicited message. A message that is a response to a command (also see unsolicited message).

spool data management. For JES3, the recording and retrieval of data on the spool data set and the management of space within the spool data set.

spool device. A direct-access device that JES3 uses for intermediate storage of control blocks and data needed for processing jobs. When JES3 is used for multiprocessing, the spool device becomes a collection point for job input data to be distributed to local processors, and for job output data coming from local processors enroute to I/O devices attached to the global processor.

spool device. A direct-access device that JES3 uses for intermediate storage of control blocks and data needed for processing jobs. When JES3 is used for multiprocessing, the spool device becomes a collection point for job input data to be distributed to local mains, and for job output data coming from local mains enroute to I/O devices attached to the global.

spool partition. A named collection of spool data sets.

staging area. An area into which subsystem interface routines store data to be transferred between address spaces. Staging areas can be contained in the common service area (CSA), or in an optional JES3 auxiliary address space. The staging areas are accessible from all address spaces.

staging drive group. A collection of staging drives for space management and recovery. It is created by the user with the Mass Storage Control Table Create program.

standard job. A job for which JES3 defines needed processing entirely from Input Service, Converter Interpreter, MAIN service, Output Service, and PURGE service.

statistics data area (SDA). A data area used to collect JES3 processing statistics by using the IATXSTAT macro.

Storage management subsystem (SMS). An MVS subsystem responsible for managing data sets and volumes. This subsystem supports JCL constructs such as storage class and storage group.

subsystem identification block (SSIB). The control block into which MVS places the name of the subsystem to which it is directing a request over the subsystem interface.

SSI. Subsystem interface.

subsystem interface (SSI). A set of program routines that allows two-way communication between a JES3 address space and other address spaces.

subsystem options block (SSOB). The control block into which MVS places a function code when communicating with JES3 over the subsystem interface. The function code identifies a requested service.

subsystem services common services. A term used to collectively identify JES3 routines that handle communication among JES3 modules running on separate processors. (For example, a subsystem interface service routine and a receiving DSP would be referred to as subsystem interface common services.)

system management facilities (SMF). An optional control program feature of MVS that provides the means for gathering and recording information that can be used to evaluate system usage.

systems application architecture (SAA). A set of software interfaces, conventions, and protocols that provide a framework for designing and developing applications with cross-system consistency.

systems network architecture (SNA). The total description of the logical structure, formats, protocols, and operational sequences for transmitting information units through a communication system.

systems network architecture remote job processing (SNA RJP). A facility that permits the input and output of jobs to and from SNA workstations.

systems network architecture/network job entry (SNA/NJE). A networking capability that works in combination with MVS/Bulk Data Transfer (MVS/BDT). Networking is established between nodes through MVS/BDT "sessions." Sessions can be established over telephone lines, microwave links, by satellite, or by channel-to-channel adapters.

T

TP. See *transaction program.*

transaction program. An application program that allows users to access resources in a SNA network.

U

uniprocessor. A processor complex that consists of only one CPU.

unsolicited message. A message that is not a response to a command (also see solicited message).

USAM. User spool access method.

user buffer pool (UBUF). An area in each user's address space that has been divided into buffers.

user spool access method (USAM). Data management routines that do not execute in the JES3 address space but provide the subsystem interface for allocation, deallocation, SYSIN/SYSOUT, OPEN, and CLOSE functions of user data sets.

V

volume. That portion of a single unit of storage that is accessible to a single read/write mechanism; for example, a drum, a disk pack, or part of a disk storage module.

VTAM. Virtual telecommunications access method.

W

warm start (W). For JES3, a restart where an IPL must be performed on all processors and there is a choice of using the last set of initialization statements processed or a new set of initialization statements.

warm start with analysis (WA). For JES3, a special form of warm start where the JES3 job queue is examined and any jobs that would cause another restart are automatically deleted.

warm start to replace a spool data set (WR). For JES3, a special form of warm start where a spool data set can be replaced by another data set with the same ddname; all jobs with data on the replaced spool data set are lost.

warm start with analysis to replace a spool data set (WAR). For JES3, a special form of warm start (W) combining warm start with analysis (WA) and warm start to replace a spool data set (WR) processing.

WLM managed. The system mode of operation where JES3 batch initiators are controlled by the workload management component of MVS.

Workload Management (WLM). WLM is a component of MVS that manages system resources.

workstation. A station at which an individual can send data to or receive data from a computer for the purpose of performing a job.

Glossary

writer. See *output writer.*

writer output multitasking. For JES3, a facility by which writer output processing can be performed concurrently with other JES3 functions on a multiprocessor global processor.

WTO. Write to operator.

WTO/R. Write to operator with a reply request.

Index

A

A parameter 160
access
  permanently resident DASD 179
accessibility 223
ACCOUNT statement 23
ADDRSORT parameter 185
ALIAS parameter 139
ALLOCATE parameter 185
ALTJCL parameter 197
ALTPM parameter 76
ALWIO parameter 188
APPLID parameter 44
AUTH parameter 32
AUTO parameter 140, 172

B

B parameter 164
BADTRACK statement 25
BAR parameter 116
BDTID parameter 140
BFSIZ parameter 140
BUFFER statement 26
BUFSIZE parameter 28
BURST parameter 77
BYPASS parameter 98
BYTES parameter 205

C

C parameter 165, 171
CANCEL parameter 38
CARDS parameter 197
CARR parameter 210
CARRIAGE parameter 77, 153
CB parameter 78, 153
CDSTOCK parameter 153
CHAR parameter 48
CHARS parameter 78, 153, 210
CHNSIZE parameter 78, 214
CHOICE parameter 175
CIBATCH parameter 37, 197
CICNT parameter 198
CIDEMAND parameter 38, 198
CIFSS parameter 54
CIPARM statement 31
CKPNT parameter 79
CKPNTPG parameter 79
CKPNTSEC parameter 79
CLASS parameter 135, 176, 207, 209
CLASS statement 34
coding rules for initialization statements 1
COMMAND parameter 32
COMMDEFN statement 44
COMMENT statement 45
COMPACT parameter 171, 214
COMPACT statement 46
compaction table 46
console standard 52
CONSOLE statement
  for RJP 49
CONSTD statement 52
CONTROL parameter 210
converter/interpreter option 31
COPIES parameter 210
COPYMARK parameter 80
CS parameter 167
CTC parameter 140
CYL parameter 26

D

DAFETCH parameter 186
data set integrity 97
DBGCLASS parameter 199
DDN parameter 100
DDNAME parameter 26, 103, 216
deadline scheduling 55
DEADLINE statement 55
DEF parameter 38, 116, 191
default
  MVS/BDT node 206
DEFAULT parameter 48
DEFCLASS parameter 140
DEFERCT parameter 186
define
  access to permanently resident DASD 179
  buffer 26
  comment 45
  compaction table 46
  console standard 52
  converter/interpreter option 31
  data set integrity 97
  deadline scheduling 55
  default MVS/BDT node 206
  device names for JES3 180
  direct access volume 189
  dynamically allocated data set 98
  dynamically allocated device 98
  end of initialization stream 101
  end of JES3 I/O statement 102
  format a spool data set 102
  functional subsystem 105
  high watermark setup 119
  I/O device 63
  inbound SYSOUT destinations 57
  initialization debugging facility 126
  installation defaults and standards 194
  job accounting information 23
  job class 34, 111
  job class group 111
  job selection 173
  main 127
  MDS parameter 184
  message routing 132
  network BSC line 61
  network node 136
define *(continued)*
  networking message class 135
  options 144
  output service default 151
  processor status 58
  remote job processing line for BSC 159
  remote job processing terminal for BSC 161
  resident control block 157
  resident data set 158
  segmented initialization stream 124
  SNA work station characteristics 169
  SNA/RJP console 49
  spool data set replacement 215
  spool I/O error 25
  spool partition definition 190
  SYSOUT class characteristic 207
  track error 25
  VTAM parameter 44
DEST parameter 50, 211
DESTDEF statement 57
DEVICE (I/O) statement 63
DEVICE (Network) statement 61
device names for JES3 180
DEVICE parameter 58
DEVICE statement
  for processor status 58
DEVPOOL parameter 117
DGROUP parameter 80
DGRPONLY parameter 80
direct access volume 189
disability 223
DLOG parameter 55
documents, licensed xi
DSN parameter 100, 159, 186
DSPCNT parameter 109
DTYPE parameter 59, 61, 81
DUMP parameter 147
DUMPLINS parameter 149
DUPJOBNM parameter 148
DYNALDSN statement 97
DYNALLOC statement 98
DYNAMIC parameter 81
dynamically allocated
  data set 98
  device 98

E

EDIT parameter 53
end of initialization stream 101
end of JES3 I/O statement 102
ENDINISH statement 101
ENDJSAM statement 102
EXPWD parameter 141
EXRESC parameter 113
EXSIG parameter 141

© Copyright IBM Corp. 1988, 2002

F

F parameter 160, 166
FAILURE parameter 38, 199
FCT parameter 157
FEATURES parameter 82
FETCH parameter 186
FIXPAGE parameter 129
FLASH parameter 82, 153, 211
format a spool data set 102
FORMAT statement 102
FORMS parameter 82, 154, 211
FSS (functional subsystem)
  defining 105
FSSDEF statement 105
FSSNAME parameter 83, 107

G

G parameter 160, 166, 171
GLOBMPF parameter 53
glossary 229
GROUP parameter 39, 176
GROUP statement 111
GRPSZ parameter 29, 193

H

HEADER parameter 83
HOLD parameter 211
HOME parameter 141
HWS (high-watermark setup)
  use 119
HWSNAME statement 119

I

I parameter 160
I/O device 63
ID parameter 130
inbound SYSOUT destinations 57
INCL parameter 176
INCLUDE statement 100, 124
  usage note 100
INCR parameter 177
index parameter 127
INIT parameter 192
initialization 126
  segmented initialization stream 124
initialization statement
  ACCOUNT 23
  BADTRACK 25
  BUFFER 26
  CIPARM 31
  CLASS 34
  COMMDEFN 44
  COMMENT 45
  COMPACT 46
  CONSOLE
    for RJP 49
  CONSTD 52
  DEADLINE 55
  DESTDEF 57
  DEVICE (I/O) 63
  DEVICE (Network) 61
  DEVICE for processor status 58
initialization statement *(continued)*
  DYNALDSN 97
  DYNALLOC 98
  ENDINISH 101
  ENDJSAM 102
  FORMAT 102
  FSSDEF 105
  GROUP 111
  HWSNAME 119
  INCLUDE 124
  INTDEBUG 126
  MAINPROC 127
  MSGROUTE 132
  NJECONS 135
  NJERMT 136
  OPTIONS 144
  OUTSERV 151
  RESCTLBK 157
  RESDSN 158
  RJPLINE 159
  RJPTERM 161
  RJPWS 169
  segmented stream 124
  SELECT 173
  SETACC 179
  SETNAME 180
  SETPARAM 184
  SETRES 189
  SPART 190
  spool data set replacement 215
  STANDARDS 194
  SYSID 206
  SYSOUT 207
installation
  defaults and standards 194
INT parameter 212
INTDEBUG statement 126
INTPMID parameter 204
INTPROC parameter 204
INTRDR parameter 149
IORATE parameter 39

J

J parameter 134
JES3
  terminology
    glossary 229
JESMSG parameter 39, 200
JESMSGLMT parameter 130
JNAME parameter 49, 59, 61, 83
job accounting information 23
job class 34
  grouping 111
job selection 173
JOBMIX parameter 177
JOBNO parameter 149
JOURNAL parameter 39
JSPAN parameter 117
JUNIT parameter 59, 62, 84

K

keyboard 223

L

LDENS parameter 85
LEN parameter 90
LEVEL parameter 51
licensed documents xi
LINE parameter 141
LINELIM parameter 85
LINES parameter 200
LL parameter 51
LookAt message retrieval tool xii
LSTRR parameter 40
LU parameter 45, 172

M

MAGEL parameter 177
MAGER parameter 177
main 127
MAIN parameter 133
MAINPROC statement 127
MAXASST parameter 109, 201
MAXIO parameter 189
MAXJOBST parameter 201
MAXLINE parameter 141
MCCT parameter 48
MDEPTH parameter 40
MDEST parameter 130
MDS parameter 184
MDSLOG parameter 187
MEMBER parameter 125
message retrieval tool, LookAt xii
message routing 132
MINBUF parameter 29
MLIMIT parameter 40
MODE parameter 86, 113
MODIFY parameter 86, 154, 212
MODIFY,CONFIG command 49
  usage 49, 66, 106, 124, 170
MSGDEST parameter 107
MSGROUTE statement 132
MT parameter 150
MTJESMSG parameter 187

N

N parameter 160, 164, 171
NAME parameter 37, 47, 113, 129, 139, 175, 191, 207
NAMES parameter 182
NETHOLD parameter 141
network BSC line 61
network node 136
networking
  message class 135
NJECONS statement 135
NJEPR parameter 142
NJEPU parameter 142
NJERMT statement 136
Notices 225
NPRO parameter 86, 156
NUMDEV parameter 62, 87

O

O parameter 161, 166
OPACTLOG parameter 88
options 144
OPTIONS statement 144
OUTLIM parameter 154
output service
  default 151
OUTSERV statement 151
OUTSVFCT parameter 154
OVFL parameter 212
OVRFL parameter 193

P

P parameter 44, 161, 167, 172
PAGELIM parameter 88
PAGES parameter 28, 205
PARM parameter 32
PARMID parameter 34
PATH parameter 142
PDEFAULT parameter 89
PDIR parameter 89
PL parameter 172
PLEXSYN parameter 54
PM parameter 89
PNAME parameter 108
POOLNAMS parameter 182
PR parameter 166, 171
PRJESMSG parameter 187
processor
  status 58
PROTECT parameter 98
PRTDEF parameter 142
PRTPAGE parameter 130
PRTTSO parameter 142
PRTXWTR parameter 142
PRTY parameter 41, 202, 212
PRW parameter 167
PSTCNT parameter 198
PU parameter 167, 171
PUNDEF parameter 142
PUW parameter 167
PWCNTL parameter 143
PWD parameter 142

R

RD parameter 167, 171
RDFEAT parameter 89
RDLY parameter 140
RECORDS parameter 90
REGION parameter 34
remote job processing line
  for BSC 159
remote job processing terminal
  for BSC 161
REMOUNT parameter 188
RESCTLBK statement 157
RESDSN statement 158
resident control block 157
resident data set 158
RETRYCT parameter 143
RJPLINE statement 159
RJPTERM statement 161
RJPWS statement 169
routecode parameter 133

S

S parameter 161
SAGEL parameter 178
SAGER parameter 178
SAVEMSG parameter 51
SBAR parameter 178
SDEPTH parameter 41, 178
SDI parameter 148
SE parameter 150
segmented initialization stream
  using INCLUDE statement 124
SELECT parameter 90, 131
SELECT statement 173
SET parameter 167
SETACC statement 179
SETNAME statement 180
SETPARAM statement 184
SETRES statement 189
SETUP parameter 172, 202
SETUPMSG parameter 91
shortcut keys 223
SIG parameter 143
SMSSETUP parameter 188
SNA work station
  characteristics 169
SNA/RJP console 49
SNAGROUP parameter 154
SPART parameter 41, 103, 131, 143, 212, 216
SPART statement 190
SPIN parameter 41
SPLIM parameter 29, 192
spool data set replacement 215
spool error 25
spool partition definition 190
STACKER parameter 91, 155, 212
STANDARDS statement 194
START parameter 109
STCPMID parameter 204
STCPROC parameter 205
STREAM parameter 143
STT parameter 103, 216
STTL parameter 104, 217
SYN parameter 54
Syntax
  general rules 21
SYSID statement 206
SYSLINES parameter 203
SYSOUT class characteristic 207
SYSOUT statement 207
SYSTEM parameter 42, 108, 129

T

T parameter 161, 164
TAFETCH parameter 188
TDEPTH parameter 43
TERM parameter 108
THRESHLD parameter 155, 213
THWSSEP parameter 203
TLIMIT parameter 43
TRACE parameter 172
track error 25
TRACK statement 215
TRAIN parameter 92, 155, 213
TRK parameter 26
TRKGRPS parameter 43, 131, 213
TRUNC parameter 30, 213
TSOPMID parameter 204
TSOPROC parameter 205
TYPE parameter 50, 56, 107, 120, 143, 214

U

UNIT parameter 100
USERID parameter 58
USRPAGE parameter 132

V

VOL parameter 180, 190
VOLSER parameter 101
VTAM parameter 44

W

WANTDUMP parameter 149
WC parameter 92, 156
WS parameter 92, 156

X

XCFGRPNM parameter 151
XLATE parameter 93
XNAMEREQ parameter 144
XTYPE parameter 93, 182
XUNIT parameter 94

Readers' Comments — We'd Like to Hear from You

z/OS
JES3 Initialization and Tuning Reference

Publication No. SA22-7550-02

Overall, how satisfied are you with the information in this book?

	Very Satisfied	Satisfied	Neutral	Dissatisfied	Very Dissatisfied
Overall satisfaction	☐	☐	☐	☐	☐

How satisfied are you that the information in this book is:

	Very Satisfied	Satisfied	Neutral	Dissatisfied	Very Dissatisfied
Accurate	☐	☐	☐	☐	☐
Complete	☐	☐	☐	☐	☐
Easy to find	☐	☐	☐	☐	☐
Easy to understand	☐	☐	☐	☐	☐
Well organized	☐	☐	☐	☐	☐
Applicable to your tasks	☐	☐	☐	☐	☐

Please tell us how we can improve this book:

Thank you for your responses. May we contact you? ☐ Yes ☐ No

When you send comments to IBM, you grant IBM a nonexclusive right to use or distribute your comments in any way it believes appropriate without incurring any obligation to you.

Name _____ Address _____

Company or Organization _____

Phone No. _____

Readers' Comments — We'd Like to Hear from You
SA22-7550-02

Cut or Fold
Along Line

Fold and Tape | **Please do not staple** | Fold and Tape

NO POSTAGE
NECESSARY
IF MAILED IN THE
UNITED STATES

BUSINESS REPLY MAIL

FIRST-CLASS MAIL PERMIT NO. 40 ARMONK, NEW YORK

POSTAGE WILL BE PAID BY ADDRESSEE

IBM Corporation
Department 55JA, Mail Station P384
2455 South Road
Poughkeepsie, NY
12601-5400

Fold and Tape | **Please do not staple** | Fold and Tape

SA22-7550-02

Cut or Fold
Along Line

Program Number: 5694-A01, 5655-G52

Printed in U.S.A.

SA22-7550-02