z/OS

Security Server RACROUTE Macro Reference

SA22-7692-03

z/OS

Security Server RACROUTE Macro Reference

SA22-7692-03

Note

Before using this information and the product it supports, be sure to read the general information under “Notices” on page 445.

Fourth Edition, September 2002

This is a major revision of SA22-7692-02. This edition applies to z/OS™ Version 1 Release 4 (5694-A01), Version 1 Release 4 of z/OS.e (5655-G52), and to all subsequent releases and modifications until otherwise indicated in new editions.

Order documents through your IBM® representative or the IBM branch office serving your locality. Documents are not stocked at the address below.

IBM welcomes your comments. A form for readers’ comments may be provided at the back of this document, or you may address your comments to the following address:

International Business Machines Corporation
Department 55JA, Mail Station P384
2455 South Road
Poughkeepsie, NY 12601-5400
United States of America

FAX (United States & Canada): 1+845+432-9405
FAX (Other Countries):
Your International Access Code +1+845+432-9405

IBMLink™ (United States customers only): IBMUSM10(MHVRCFS)
Internet e-mail: mhvrcfs@us.ibm.com
World Wide Web: http://www.ibm.com/servers/eserver/zseries/zos/webqs.html

If you would like a reply, be sure to include your name, address, telephone number, or FAX number.

Make sure to include the following in your comment or note:
- Title and order number of this document
- Page number or topic related to your comment

When you send information to IBM, you grant IBM a nonexclusive right to use or distribute the information in any way it believes appropriate without incurring any obligation to you.

© Copyright International Business Machines Corporation 1994, 2002. All rights reserved.
US Government Users Restricted Rights – Use, duplication or disclosure restricted by GSA ADP Schedule Contract with IBM Corp.

Contents

Figures vii

Tables ix

About this document xi
Who should use this document xi
How to use this document xi
Where to find more information xii
IBM systems center publications xiv
Other sources of information xv
To request copies of IBM publications xvi

Summary of changes xvii

Chapter 1. How to use the RACF system macros 1
Reading the macro instructions 4
Continuation lines 6

Chapter 2. RACF system macros 7
RACROUTE: router interface 8
Keyword and parameter cross-reference for RACROUTE 9
Addressing considerations 12
Cross memory considerations 13
RACROUTE (standard form) 13
Return codes 17
RACROUTE (list form) 18
RACROUTE (execute form) 20
RACROUTE (modify form) 21

Chapter 3. System Macros 23
RACROUTE REQUEST=AUDIT: general-purpose security-audit request 23
RACROUTE REQUEST=AUDIT (standard form) 23
Return codes and reason codes 26
RACROUTE REQUEST=AUDIT (list form) 27
RACROUTE REQUEST=AUDIT (execute form) 28
RACROUTE REQUEST=AUDIT (modify form) 29
RACROUTE REQUEST=AUTH: check RACF authorization 30
RACROUTE REQUEST=AUTH (standard form) 31
Return codes and reason codes 44
RACROUTE REQUEST=AUTH (list form) 49
RACROUTE REQUEST=AUTH (execute form) 52
RACROUTE REQUEST=AUTH (modify form) 56
RACROUTE REQUEST=DEFINE: Define, modify, rename, or delete a resource for RACF 59
RACROUTE REQUEST=DEFINE (standard form) 59
Return codes and reason codes 76
RACROUTE REQUEST=DEFINE (list form) 83
RACROUTE REQUEST=DEFINE (execute form) 86
RACROUTE REQUEST=DEFINE (modify form) 90
RACROUTE REQUEST=DIRAUTH: Check RACF-directed authorization to a sent message 93
RACROUTE REQUEST=DIRAUTH (standard form) 93
Return codes and reason codes 94

© Copyright IBM Corp. 1994, 2002

RACROUTE REQUEST=DIRAUTH (list form) 96
RACROUTE REQUEST=DIRAUTH (execute form). 97
RACROUTE REQUEST=DIRAUTH (modify form) 98
RACROUTE REQUEST=EXTRACT: Replace or retrieve fields 99
RACROUTE REQUEST=EXTRACT (standard form). 100
Return codes and reason codes 120
RACROUTE REQUEST=EXTRACT (list form) 130
RACROUTE REQUEST=EXTRACT (execute form) 132
RACROUTE REQUEST=EXTRACT (modify form) 135
RACROUTE REQUEST=FASTAUTH: Verify access to resources 137
RACROUTE REQUEST=FASTAUTH (standard form) 139
Return codes and reason codes 144
RACROUTE REQUEST=FASTAUTH (list form) 146
RACROUTE REQUEST=FASTAUTH (execute form) 147
RACROUTE REQUEST=LIST: Build in-storage profiles 149
RACROUTE REQUEST=LIST (standard form) 149
Return codes and reason codes 156
RACROUTE REQUEST=LIST (list form) 159
RACROUTE REQUEST=LIST (execute form) 160
RACROUTE REQUEST=LIST (modify form) 161
RACROUTE REQUEST=SIGNON: Manage PV signed-on lists. 163
RACROUTE REQUEST=SIGNON (standard form) 164
Return codes and reason codes 171
RACROUTE REQUEST=SIGNON (list form) 176
RACROUTE REQUEST=SIGNON (execute form) 178
RACROUTE REQUEST=SIGNON (modify form) 180
RACROUTE REQUEST=STAT: Determine RACF Status 182
RACROUTE REQUEST=STAT (standard form) 183
Return codes and reason codes 185
RACROUTE REQUEST=STAT (list form) 188
RACROUTE REQUEST=STAT (execute form) 189
RACROUTE REQUEST=STAT (modify form) 190
RACROUTE REQUEST=TOKENBLD: Build a UTOKEN 190
RACROUTE REQUEST=TOKENBLD (standard form) 191
Return codes and reason codes 195
RACROUTE REQUEST=TOKENBLD (list form) 197
RACROUTE REQUEST=TOKENBLD (execute form) 198
RACROUTE REQUEST=TOKENBLD (modify form) 200
RACROUTE REQUEST=TOKENMAP: Access token fields 201
RACROUTE REQUEST=TOKENMAP (standard form) 202
Return codes and reason codes 203
RACROUTE REQUEST=TOKENMAP (list form) 204
RACROUTE REQUEST=TOKENMAP (execute form) 205
RACROUTE REQUEST=TOKENMAP (modify form). 206
RACROUTE REQUEST=TOKENXTR: Extract UTOKENS. 206
RACROUTE REQUEST=TOKENXTR (standard form) 207
Return codes and reason codes 208
RACROUTE REQUEST=TOKENXTR (list form) 209
RACROUTE REQUEST=TOKENXTR (execute form) 210
RACROUTE REQUEST=TOKENXTR (modify form) 210
RACROUTE REQUEST=VERIFY: Identify and verify a RACF-defined user 211
RACROUTE REQUEST=VERIFY (standard form) 212
Recommendations for changing or deleting an ACEE 230
Return codes and reason codes 231
RACROUTE REQUEST=VERIFY (list form) 234
RACROUTE REQUEST=VERIFY (execute form) 237

RACROUTE REQUEST=VERIFY (modify form) 240
RACROUTE REQUEST=VERIFYX: Verify user and return a UTOKEN 243
RACROUTE REQUEST=VERIFYX (standard form) 244
Return codes and reason codes 253
RACROUTE REQUEST=VERIFYX (list form) 257
RACROUTE REQUEST=VERIFYX (execute form) 259
RACROUTE REQUEST=VERIFYX (modify form) 261

Appendix A. Independent RACF system macros 265
FRACHECK macro 266
FRACHECK (standard form) 266
Parameters for RELEASE=1.6 through 1.8.1 268
Return codes and reason codes 268
FRACHECK (list form). 269
FRACHECK (execute form) 270
RACDEF: Define a resource to RACF 271
RACDEF (standard form) 272
Parameters for RELEASE=1.6 through 1.8.1 283
Return codes and reason codes 284
RACDEF (list form) 287
RACDEF (execute form) 289
RACHECK: Check RACF authorization 293
RACHECK (standard form) 293
Parameters for RELEASE=1.6 through 1.8.2 300
Return codes and reason codes 301
RACHECK (list form) 303
RACHECK (execute form) 305
RACINIT: Identify a RACF-defined user 308
RACINIT (standard form). 308
Parameters for RELEASE=1.6 through 1.8.1 313
Recommendations for changing or deleting an ACEE 314
Return codes and reason codes 315
RACINIT (list form) 316
RACINIT (execute form) 317
RACLIST: Build in-storage profiles 320
RACLIST (standard form) 320
Parameters for RELEASE=1.6 through 1.8.1 322
Return codes and reason codes 322
RACLIST (list form). 324
RACLIST (execute form) 325
RACROUTE: SAF router interface 326
RACROUTE (standard form) 327
Return Codes and Reason Codes 330
RACROUTE (list form) 331
RACROUTE (execute form). 332
RACSTAT macro. 334
RACSTAT macro (standard form). 334
Parameters for RELEASE=1.6 through 1.8.1 335
RACSTAT (list form) 336
RACSTAT (execute form) 336
RACXTRT macro (standard form) 337
Parameters for RELEASE=1.6 through 1.8.1 347
Return codes and reason codes 348
RACXTRT (list form) 350
RACXTRT (execute form) 351

Appendix B. RACF database templates 355
Format of field definitions 355
Repeat groups on the RACF database. 356
Data field types 356
Combination fields on the RACF database 357
Determining space requirements for the profiles 357
Determining space requirements for alias index entries. 359
Group template for the RACF database 359
User template for the RACF database 362
Connect template for the RACF database 372
Data set template for the RACF database 374
General template for the RACF database. 378
Reserved templates for the RACF database. 384

Appendix C. System Authorization Facility (SAF) and SAF Exits 387
System Authorization Facility (SAF) 387
Exit routine environment 387
Exit routine processing 388
Programming considerations 388
SAF router exit 389
SAF exits (ICHRTX00 and ICHRTX01). 389
Considerations 389
SAF router exits (ICHRTX00 and ICHRTX01) 390
Return codes from the SAF router exits (ICHRTX00 and ICHRTX01) . . . 391
Simulating a call to RACF 392
JES handling of the return codes from SAF 392
SAF callable services router installation exit (IRRSXT00) 393

Appendix D. SAF interface to an external security product 395
Security product router 395
Requirements for the security product router 396
Input parameters to the security product router. 396
Exit conditions from the security product router 397
Programming considerations 398
SAF Callable Services Router Installation exit (IRRSXT00) for z/OS UNIX callable services 399

Appendix E. IBM-supplied class descriptor table entries 401

Appendix F. Requesting security services 441

Appendix G. Accessibility 443
Using assistive technologies 443
Keyboard navigation of the user interface. 443

Notices 445
Programming interface information 446
Trademarks. 447

Index 449

Figures

1. Sample Macro Instruction 4
2. Continuation Coding 6
3. ENVR Data Structure 110
4. ENVR Data Structure 167
5. ENVR Data Structure 220

© Copyright IBM Corp. 1994, 2002

Tables

1. Cross-reference for RACROUTE REQUEST=type and the Independent RACF System Macros 8
2. RACROUTE REQUEST=keyword Cross-Reference 9
3. Types of Profile Checking Performed by RACROUTE REQUEST=AUTH 40
4. Description of ENVR Data Structure 110
5. ENVROUT Storage Area Processing 110
6. Description of ENVR Data Structure 167
7. ENVROUT Storage Area Processing 167
8. Delete Actions Based on Input Supplied. 170
9. Description of ENVR Data Structure 220
10. ENVROUT Storage Area Processing 220
11. Relationship between the ERROROPT keyword and RELEASE= values 222
12. Description of X500NAME Data Structure 230
13. Relationship between the ERROROPT keyword and RELEASE= values 247
14. Cross-reference for RACROUTE REQUEST=type and the Independent RACF System Macros 265
15. RACDEF Parameters for RELEASE= 1.6 through 1.8.1 283
16. Types of Profile Checking Performed by RACHECK 298
17. RACHECK Parameters for RELEASE=1.6 through 1.8.2 300
18. RACINIT Parameters for RELEASE=1.6 through 1.8.1 313
19. RACLIST Parameters for RELEASE=1.6 through 1.8.1 322
20. RACSTAT Parameters for RELEASE=1.6 through 1.8.1 335
21. RACXTRT Parameters for RELEASE=1.6 through 1.8.1 347
22. RACROUTE Macro Keywords and Their Request-Specific Parameter Lists 397
23. Classes Supplied by IBM 401

© Copyright IBM Corp. 1994, 2002

About this document

This document supports z/OS (5694-A01) and z/OS.e (5655-G52). It describes the full-function RACROUTE macro for z/OS, and the requests that can be invoked by it, including syntax and related information.

This document contains information about RACF, which is part of the z/OS Security Server. The security server includes the following components:
- Resource Access Control Facility (RACF®)
- DCE Security Server
- z/OS Firewall Technologies
- LDAP Server, which includes client and server function
- Open Cryptographic Enhanced Plug-ins
- Network Authentication Service
- PKI Services

For information about the other components of z/OS Security Server, see the documentation related to those components.

Who should use this document

This document is intended (1) for the use of programmers who are writing applications that need to invoke RACF (or another external security product) from MVS and (2) for those who write other external security products (that replace RACF) to perform the following functions for MVS:
- Centralized auditing
- Resource authorization
- Resource definition
- Data encryption
- User identification and verification.

How to use this document

The major sections of this document contain information on the RACROUTE macro. The appendices present interface information. Macro descriptions within the sections are presented in alphabetical order. Each description includes:
- A general description of the service that the macro performs
- A table of syntax rules that you must follow when you code the macro
- An alphabetical list of the parameters you can specify and an explanation of each parameter:

These are the major sections and appendices in this document:
- The first section, Chapter 1, “How to use the RACF system macros” on page 1, provides information on how to read the syntax tables and how to code the macros.
- The second section, Chapter 2, “RACF system macros” on page 7, provides information on the external system macros that other callers can use to invoke RACF or another security product.

  This section includes information on the full-function RACROUTE interface and the macro types that it can invoke. IBM recommends that installations use the full-function RACROUTE interface documented in this chapter instead of the independent RACF system macros described in Appendix A, “Independent RACF system macros” on page 265.

© Copyright IBM Corp. 1994, 2002

- The third section, Appendix A, “Independent RACF system macros” on page 265, describes macros that can be used to invoke security checking by either RACF or another security product. For RACF 1.9 and later releases, no new keywords are supported on the independent RACF system macro invocations. However, IBM continues to support the independent invocation of these macros for release levels prior to 1.9. If your installation wants to invoke these macros and use new keywords, your installation must invoke them using the full-function RACROUTE interface documented in Chapter 2, “RACF system macros” on page 7.
- The fourth section, Appendix B, “RACF database templates” on page 355, describes the Group, User, Connect, Data Set, General, and Reserved templates for the RACF database.
- The fifth section, Appendix C, “System Authorization Facility (SAF) and SAF Exits” on page 387, provides information about the System Authorization Facility (SAF), and SAF exits.
- The sixth section, Appendix D, “SAF interface to an external security product” on page 395, provides programming information about using the SAF interface with an external security product other than RACF.
- The seventh section, Appendix E, “IBM-supplied class descriptor table entries” on page 401, lists the class entries supplied by IBM in the class descriptor table (ICHRRCDX).
- The eighth section, Appendix F, “Requesting security services” on page 441, provides guidance information for application programmers requesting the services of the security product.
- The ninth section, “Appendix G. Accessibility”, contains product accessibility information.
- The tenth section, “Notices” on page 445, contains copyright and trademark information.

Where to find more information

Where necessary, this document references information in other publications. For complete titles and order numbers for all elements of z/OS, see *z/OS Information Roadmap*.

Softcopy publications

The RACF library is available on the following CD-ROMs. The CD-ROM online library collections include Library Reader™, which is a program that enables you to view the softcopy documents.

SK3T-4269 *z/OS Version 1 Release 4 Collection*

This collection contains the set of unlicensed documents for the current release of z/OS in both BookManager® and Portable Document Format (PDF) files. You can view or print the PDF files with the Adobe Acrobat reader.

SK3T-4272 *z/OS Security Server RACF Collection*

This softcopy collection kit contains the Security Server library for z/OS in both BookManager and Portable Document Format (PDF) files. You can view or print the PDF files with the Adobe Acrobat reader.

SK2T-2180 *Online Library OS/390 Security Server RACF Information Package*

This softcopy collection contains the Security Server library for OS/390®. It also contains the RACF/MVS Version 2 product libraries, the RACF/VM 1.10 product library, product documents

from the OS/390 and VM collections, International Technical Support Organization (ITSO) documents (known as Redbooks™), and Washington System Center (WSC) documents (known as orange books) that contain information related to RACF. The collection does not contain any licensed publications. By using this CD-ROM, you have access to RACF-related information from IBM products such as OS/390, VM/ESA®, CICS®, and NetView®.

SK3T-7876 *IBM eServer zSeries™ Redbooks Collection*

This softcopy collection contains a set of documents called Redbooks that pertain to zSeries subject areas ranging from e-business application development and enablement to hardware, networking, Linux, solutions, security, Parallel Sysplex® and many others.

SK2T-2177 *IBM Redbooks S/390® Collection*

This softcopy collection contains a set of documents called Redbooks that pertain to S/390 subject areas ranging from application development and enablement to hardware, networking, security, Parallel Sysplex and many others.

RACF courses

The following RACF classroom courses are available:

ES840 *Implementing RACF Security for CICS/ESA® and CICS/TS*

H3917 *Basics of OS/390 Security Server RACF Administration*

H3927 *Effective RACF Administration*

ES88A *Exploiting the Features of OS/390 Security Server RACF*

IBM provides a variety of educational offerings for RACF. For more information about classroom courses and other offerings, do any of the following:

- See your IBM representative
- Call 1-800-IBM-TEACH (1-800-426-8322)

Using LookAt to look up message explanations

LookAt is an online facility that allows you to look up explanations for most messages you encounter, as well as for some system abends and codes. Using LookAt to find information is faster than a conventional search because in most cases LookAt goes directly to the message explanation.

You can access LookAt from the Internet at:

`http://www.ibm.com/eserver/zseries/zos/bkserv/lookat/`

or from anywhere in z/OS where you can access a TSO/E command line (for example, TSO/E prompt, ISPF, z/OS UNIX System Services running OMVS). You can also download code from the *z/OS Collection* (SK3T-4269) and the LookAt Web site that will allow you to access LookAt from a handheld computer (Palm Pilot VIIx suggested).

To use LookAt as a TSO/E command, you must have LookAt installed on your host system. You can obtain the LookAt code for TSO/E from a disk on your *z/OS Collection* (SK3T-4269) or from the **News** section on the LookAt Web site.

Some messages have information in more than one document. For those messages, LookAt displays a list of documents in which the message appears.

Accessing z/OS licensed documents on the Internet

z/OS licensed documentation is available on the Internet in PDF format at the IBM Resource Link™ Web site at:

`http://www.ibm.com/servers/resourcelink`

Licensed documents are available only to customers with a z/OS license. Access to these documents requires an IBM Resource Link user ID and password, and a key code. With your z/OS order you received a Memo to Licensees, (GI10-0671), that includes this key code. [1]

To obtain your IBM Resource Link user ID and password, log on to:

`http://www.ibm.com/servers/resourcelink`

To register for access to the z/OS licensed documents:

1. Sign in to Resource Link using your Resource Link user ID and password.
2. Select **User Profiles** located on the left-hand navigation bar.

Note: You cannot access the z/OS licensed documents unless you have registered for access to them and received an e-mail confirmation informing you that your request has been processed.

Printed licensed documents are not available from IBM.

You can use the PDF format on either **z/OS Licensed Product Library CD-ROM** or IBM Resource Link to print licensed documents.

IBM systems center publications

IBM systems centers produce documents known as red and orange books that can help you set up and use RACF. These documents have not been subjected to any formal review nor have they been checked for technical accuracy, but they represent current product understanding (at the time of their publication) and provide valuable information on a wide range of RACF topics. They are not shipped with RACF; you must order them separately. A selected list of these documents follows. Other documents are available, but they are not included in this list, either because the information they present has been incorporated into IBM product manuals or because their technical content is outdated.

G320-9279	*Systems Security Publications Bibliography*
GG22-9396	*Tutorial: Options for Tuning RACF*
GG24-3378	*DFSMS and RACF Usage Considerations*
GG24-3451	*Introduction to System and Network Security: Considerations, Options, and Techniques*
GG24-3524	*Network Security Involving the NetView Family of Products*
GG24-3970	*Elements of Security: RACF Overview - Student Notes*
GG24-3971	*Elements of Security: RACF Installation - Student Notes*
GG24-3972	*Elements of Security: RACF Advanced Topics - Student Notes*
GG24-3984	*RACF Macros and Exit Coding*
GG24-4282	*Secured Single Signon in a Client/Server Environment*
GG24-4453	*Enhanced Auditing Using the RACF SMF Data Unload Utility*
GG26-2005	*RACF Support for Open Systems Technical Presentation Guide*
GC28-1210	*System/390® MVS™ Sysplex Hardware and Software Migration*
SG24-4704	*OS/390 Security Services and RACF-DCE Interoperation*

1. z/OS.e™ customers received a Memo to Licensees, (GI10-0684) that includes this key code.

SG24-4820	*OS/390 Security Server Audit Tool and Report Application*
SG24-5158	*Ready for e-business: OS/390 Security Server Enhancements*
SG24-5339	*The OS/390 Security Server Meets Tivoli®: Managing RACF with Tivoli Security Products*

Other sources of information

IBM provides customer-accessible discussion areas where RACF may be discussed by customer and IBM participants. Other information is also available through the Internet.

IBM discussion areas

IBM provides *ibm.servers.mvs.racf* newsgroup for discussion of RACF-related topics. You can find this newsgroup on news (NNTP) server *news.software.ibm.com* using your favorite news reader client.

Internet sources

The following resources are available through the Internet to provide additional information about the RACF library and other security-related topics:

- **Online library**

  To view and print online versions of the z/OS publications, use this address:

  `http://www.ibm.com/servers/eserver/zseries/zos/bkserv/`

- **Redbooks**

  The documents known as Redbooks that are produced by the International Technical Support Organization (ITSO) are available at the following address:

  `http://www.ibm.com/redbooks/`

- **Enterprise systems security**

  For more information about security on the S/390 platform, OS/390, and z/OS, including the elements that comprise the Security Server, use this address:

  `http://www.ibm.com/servers/eserver/zseries/zos/security/`

- **RACF home page**

  You can visit the RACF home page on the World Wide Web using this address:

  `http://www.ibm.com/servers/eserver/zseries/zos/racf/`

- **RACF-L discussion list**

  Customers and IBM participants may also discuss RACF on the RACF-L discussion list. RACF-L is not operated or sponsored by IBM; it is run by the University of Georgia.

  To subscribe to the RACF-L discussion and receive postings, send a note to:

  `listserv@listserv.uga.edu`

  Include the following line in the body of the note, substituting your first name and last name as indicated:

  `subscribe racf-l` *`first_name last_name`*

  To post a question or response to RACF-L, send a note, including an appropriate `Subject:` line, to:

  `racf-l@listserv.uga.edu`

- **Sample code**

  You can get sample code, internally-developed tools, and exits to help you use RACF. This code works in our environment, at the time we make it available, but is not officially supported. Each tool or sample has a README file that describes the tool or sample and any restrictions on its use.

To access this code from a Web browser, go to the RACF home page and select the “Downloads” topic from the navigation bar, or go to ftp://ftp.software.ibm.com/eserver/zseries/zos/racf/.

The code is also available from `ftp.software.ibm.com` through anonymous FTP. To get access:

1. Log in as user **anonymous**.
2. Change the directory, as follows, to find the subdirectories that contain the sample code or tool you want to download:

   ```
   cd eserver/zseries/zos/racf/
   ```

An announcement will be posted on the RACF-L discussion list and on newsgroup *ibm.servers.mvs.racf* whenever something is added.

Note: Some Web browsers and some FTP clients (especially those using a graphical interface) might have problems using `ftp.software.ibm.com` because of inconsistencies in the way they implement the FTP protocols. If you have problems, you can try the following:

- Try to get access by using a Web browser and the links from the RACF home page.
- Use a different FTP client. If necessary, use a client that is based on command line interfaces instead of graphical interfaces.
- If your FTP client has configuration parameters for the type of remote system, configure it as UNIX® instead of MVS.

Restrictions

Because the sample code and tools are not officially supported,

- There are no guaranteed enhancements.
- No APARs can be accepted.

To request copies of IBM publications

Direct your request for copies of any IBM publication to your IBM representative or to the IBM branch office serving your locality.

There is also a toll-free customer support number (1-800-879-2755) available Monday through Friday from 6:30 a.m. through 5:00 p.m. Mountain Time. You can use this number to:

- Order or inquire about IBM publications
- Resolve any software manufacturing or delivery concerns
- Activate the program reorder form to provide faster and more convenient ordering of software updates

Summary of changes

Summary of changes
for SA22-7692-03
z/OS Version 1 Release 4

The document contains information previously presented in *z/OS Security Server RACROUTE Macro Reference*, which supports z/OS Version 1 Release 3.

New information

- Information is added to indicate that this document supports z/OS.e.
- "RACROUTE REQUEST=VERIFY: Identify and verify a RACF-defined user" on page 211 and "RACROUTE REQUEST=VERIFYX: Verify user and return a UTOKEN" on page 243, have been updated to include a new keyword, ERROROPT.

Changed information

- "RACROUTE (standard form)" on page 13 is updated to support the new RELEASE value (7707) associated with z/OS Version 1 Release 4.

You may notice changes in the style and structure of some content in this document — for example, headings that use uppercase for the first letter of initial words only, and procedures that have a different look and format. The changes are ongoing improvements to the consistency and retrievability of information in our documents.

This document contains terminology, maintenance, and editorial changes. Technical changes or additions to the text and illustrations are indicated by a vertical line to the left of the change.

Summary of changes
for SA22-7692-02
z/OS Version 1 Release 3

The document contains information previously presented in SA22-7692-01, which supports z/OS Version 1 Release 2.

New information

An appendix with z/OS product accessibility information has been added.

Changed information

- "RACROUTE (standard form)" on page 13 is updated to support the new RELEASE value (7706) associated with z/OS Version 1 Release 3.
- Appendix B, "RACF database templates" on page 355 is updated in support of Policy Director Authorization Services for z/OS and OS/390 in the following areas:
  - Bit 4 in the Flag 2 field of each template is redefined in support of the CACHECLS class.
  - The PROXY segment is added to the User Template.
  - The PROXY segment is added to the General Template.
  - The RACDHDR field is added to the General Template.

© Copyright IBM Corp. 1994, 2002

- Appendix E, “IBM-supplied class descriptor table entries” on page 401 is updated to add the CACHECLS class in support of Policy Director Authorization Services for z/OS and OS/390.

This document contains terminology, maintenance, and editorial changes. Technical changes or additions to the text and illustrations are indicated by a vertical line to the left of the change.

Summary of changes
for SA22-7692-01
z/OS Version 1 Release 2

The document contains information previously presented in SA22-7692-00, which supports z/OS Version 1 Release 1.

New information

- A note has been added to the ,FILTER parameter for RACROUTE REQUEST=LIST (Standard Form) to include information about specifying lowercase letters for mixed-case classes.
- RACF database group template has been modified to include new field name, UNVFLG, supporting universal groups.
- RACF database user template has been modified to include a new field name, ENCRYPT, supporting Network Authentication Service.
- RACF database general template has been modified to include a new field name, ENCRYPT, supporting Network Authentication Service.
- The class descriptor table has been updated to include the EJBROLE class.

Changed information

- “RACROUTE (standard form)” on page 13 is updated to support the new RELEASE value (7705) associated with z/OS Version 1 Release 2.

This document contains terminology, maintenance, and editorial changes, including changes to improve consistency and retrievability.

Chapter 1. How to use the RACF system macros

There are four different forms of the RACF macros: standard (S), list (L), execute (E), and modify (M). An explanation of when and why to use each form follows.

- Standard form (MF=S):

  Use the standard form of the macro when writing your own user programs (such as a non-system module), programs that you store in your own loadlib. By design, the standard form of the macro generates an inline parameter list and then modifies it. Do not use the standard form of the macro to write reentrant code, because reentrant code cannot be modified. With few exceptions, if you use the standard form of the macro in writing reentrant code, the execution of the code results in an abend.

  The standard form of the macro does three things: It obtains storage, fills in the parameters you have specified on the parameter list, and generates a call to the service routine.

- List, execute, and modify forms:

  Use the list, execute, and modify forms of the macro in combination when you write a reentrant program or plan to have numerous invocations of the macro. The forms of the macro work together in the following way:

  – List form (MF=L):

    The list form is used in two ways: 1) to allocate storage in your program's dynamic area (DSECT), and 2) to provide a template in the control section (CSECT) from which the dynamic storage parameter list can be initialized. This implies that two list forms are generally used in one program. One is used to allocate storage, and the other is used to initialize that storage. For example, the parameter list length is copied from the control section parameter list to the dynamic storage parameter list. To ensure that a valid dynamic storage parameter list has been built, the entire parameter list residing in the control section should then be copied to the parameter list residing in the dynamic storage.

    Since parameter list lengths can change from one release of RACF to the next, it is important to specify the same release on all invocations of the macro whether they be list, modify, or execute forms. If you were to code RELEASE=7705 on the control section parameter list and RELEASE=2.4 on the dynamic storage parameter list, the copy could result in an abend, or the call to the service would yield unpredictable results, since the complete parameter list was not copied.

    Note: The expansion of the list form does not contain any executable instructions; therefore, you cannot use registers in the list form.

  – Execute form (MF=E):

    When you specify the execute form of the macro, you can change the initial parameters you specified on the list form of the macro. You can also specify additional allowable parameters you might not have specified on the list form. When you issue the execute form of the macro, you generate a call to the service routine. You can change the parameters on the macro with each subsequent invocation of the execute form of the macro.

  – Modify form (MF=M):

    When you specify the modify form of the macro, you, in effect modify the parameter list of the list form of the macro. When you set the parameters that you want using the modify form of the macro, you can then use the execute form. The advantage of using the modify form is that it allows you to set only

© Copyright IBM Corp. 1994, 2002

those parameters that you need. Thus, you can code a series of modify forms, followed by one execute form instead of many execute forms. This results in reducing the number of macro invocations that you need to code.

Note: You must use the list form of the macro in conjunction with the execute or modify forms. The list form initializes certain fields that the execute and modify forms do not modify. Also, you must be sure to specify the same values for RELEASE= and REQUEST= on the execute, list, and modify forms.

Following is a representation of the relationship between the list and execute forms of the RACROUTE macro. For more information, refer to *z/OS MVS Programming: Assembler Services Guide*.

```
************************************************************************
*
* Example of list and execute in a reentrant module.
*
************************************************************************
*
RACROUT  START
*        .
*        .
         BALR 12,0                    Refer to linkage conventions
         USING *,12                    in z/OS MVS Programming:
                                           Assembler Services Guide
         USING DYNDAT,13
*
************************************************************************
************************************************************************
*
* Copy the static RACROUTE parameter list to the dynamic storage
* parameter list.
*
************************************************************************
*
         LA  8,RACROUD                Load the address of the
*                                     dynamic storage parameter list.
*
         LA 10,RACROUS                Load the address of the static
*                                     parameter list.
*
         L   9,RACROUL                Load the length of the
*                                     parameter list.
*
         LR 11,9                      Copy the length into register 11
*                                     for the MVCL.
*
         MVCL 8,10                    Copy the static parameter list
*                                     into the dynamically allocated
*                                     storage.
*
************************************************************************
*
* Establish addressability to RACROUTE parameters.
*
************************************************************************
*
         LA 3,TOKNOUT
         USING TOKEN,3
         MVI TOKLEN,TOKCURLN          Initialize the TOKNOUT area
*                                     with the length.
*
         MVI TOKVERS,TOKVER01         Initialize the TOKNOUT area
                                      with the version.
```

```
*
         LA 4,USERLN                   Load register 4 with the
*                                      user ID information address.
*
         LA 5,SAFWK                    Load register 5 with the SAF
*                                      work area address.
*
RACRTE   RACROUTE REQUEST=VERIFYX,TOKNOUT=(3),SESSION=RJEBATCH,       X
               USERID=(4),PASSWRD=PASSLN,                            X
               WORKA=(5),MF=(E,RACROUD),RELEASE=1.9
*
************************************************************************
************************************************************************
*
* Constants for RACROUTE
*
************************************************************************
*
USERLN   DC    X'07'                  Length of user ID
USERID   DC    CL8'IBMUSER '          User ID value
PASSLN   DC    X'03'                  Password length
PASSWD   DC    CL8'IBM'               Password value
         DS OF
RACROUS  RACROUTE REQUST=VERIFYX,MF=L,RELEASE=1.9
RACROUL  DC A(*-RACROUS)
*
         ICHSAFP                      SAF parameter list
*
&TOKCNST SETB 1                       Allow additional constants
         ICHRUTKN                     Security TOKEN
*
************************************************************************
*
* Module acquired dynamic storage.
*
************************************************************************
*
DYNDAT   DSECT
*        .
*        .
*        .
RACROUD  RACROUTE REQUEST=VERIFYX,MF=L,RELEASE=1.9
                                      Acquire storage for the parameter
                                      list in the module dynamic storage
                                      area.
SAFWK    DS    128F'0'                SAF work area
TOKNOUT  DS    20F'0'                 Storage for TOKEN to be returned
*
         END   RACROUT
*
************************************************************************
```

RACF macros are assembler macros; therefore you must invoke them in assembler statements. When you code a macro instruction, the assembler processes it by using the macro definitions supplied by IBM and placed in the macro library when the system is generated.

The assembler expands the macro instruction into executable machine instructions or data fields that are in the form of assembler-language statements, or both. The machine instructions branch around the data fields, load registers, and give control to the system. The instruction that gives control to the system for RACROUTE is a branch instruction. The macro expansion appears as part of the assembler output listing.

Note: High Level Assembler or Assembler H is required to assemble the RACROUTE macros.

The data fields, which are derived from parameters of the macro instruction, are used at execution time by the control program routine that performs the service associated with the macro.

Reading the macro instructions

Each macro description begins with a syntax diagram.

The syntax layout assumes that the standard begin, end, and continue columns are used. Therefore, column 1 is assumed to be the begin column. To change the begin, end, and continue columns, use the ICTL instruction to establish the coding format you want to use. If you do not use ICTL, the assembler recognizes the standard columns. To code the ICTL instruction, see *HLASM Language Reference*.

Figure 1 shows a sample macro instruction, RACROUTE REQUEST=AUTH, and summarizes all the coding information that is available for it. The example is divided into three columns, A, B, and C.

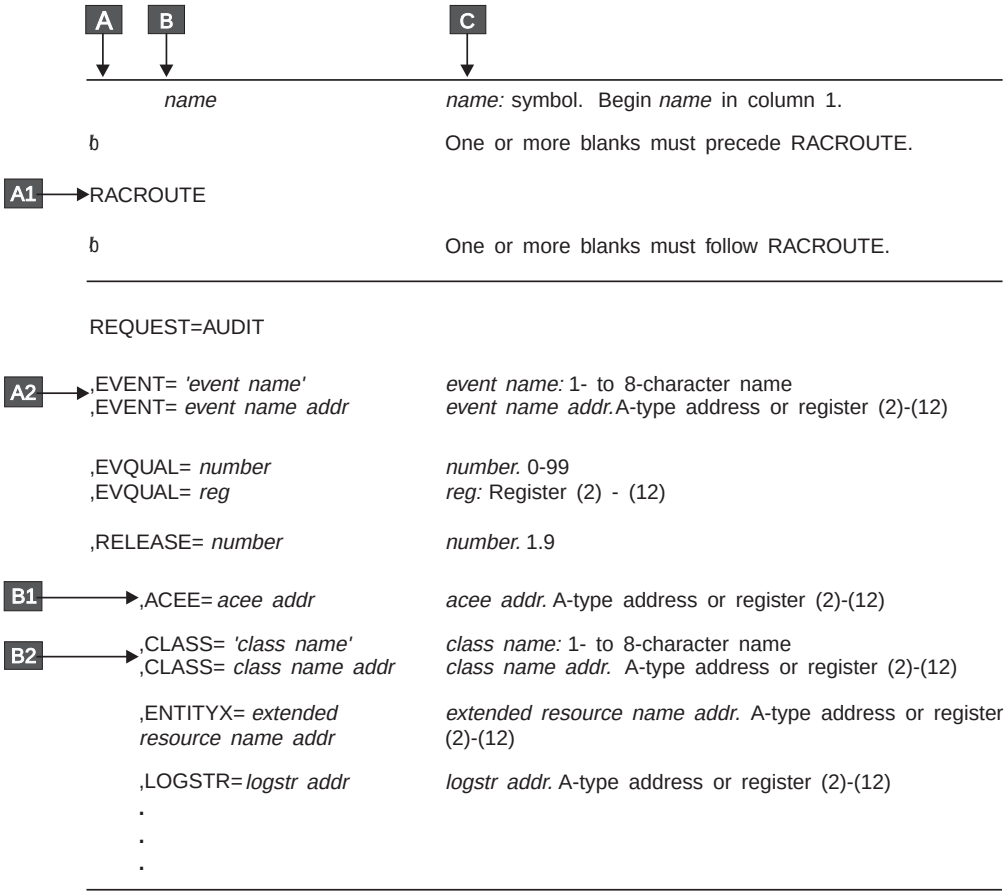

Figure 1. Sample Macro Instruction

- The first column, **A**, contains those parameters that are required for that macro instruction. If a single line appears in that column, **A1**, the parameter on that line is required and you must code it. If two or more lines appear together, **A2**, you must code the parameter appearing on one and only one of the lines.

- The second column, **B**, contains those parameters that are optional for that macro instruction. If a single line appears in that column, **B1**, the parameter on that line is optional. If two or more lines appear together, **B2**, the entire parameter is optional, but if you elect to make an entry, code one and only one of the lines.
- The third column, **C**, provides additional information about coding the macro instruction.

When substitution of a variable is required in column **C**, the following classifications are used:

symbol	Any symbol valid in the assembler language. That is, an alphabetic character followed by 0-7 alphameric characters, with no special characters and no blanks.
Rx-type address	Any address that is valid in an Rx-type instruction (such as LA).
register (2) - (12)	One of general registers 2 through 12, specified within parentheses, previously loaded with the right-adjusted value or address indicated in the parameter description. You must set the unused high-order bits to zero. You can designate the register symbolically or with an absolute expression.
decimal digit	Any decimal digit up to the value indicated in the parameter description. If both symbol and decimal digit are indicated, an absolute expression is also allowed.
register (1)	General register 1, previously loaded with the right-adjusted value or address indicated in the parameter description. You must set the unused high-order bits to zero. Designate the register as (1) only.
A-type address	Any address that can be written in an A-type address constant.
default	A value that is used in default of a specified value; that is, the value the system assumes if the parameter is not coded.

Use the parameters to specify the services and options to be performed, and write them according to the following rules:

- If the selected parameter is written in all capital letters (for example, PROFILE or ENTITY or ENTITYX), code the parameter exactly as shown.
- If the selected parameter is written in italics, substitute the indicated value, address, or name.
- If the selected parameter is a combination of capital letters and italics separated by an equal sign (for example, VOLSER=*vol addr*), code the capital letters and equal sign as shown, and then make the indicated substitution for the italics.
- Code commas and parentheses exactly as shown.
- Positional parameters (parameters without equal signs) appear first; you must code them in the order shown. You can code keyword parameters (parameters with equal signs) in any order.

- If you select a parameter, read the third column before proceeding to the next parameter. The third column often contains coding restrictions for the parameter.

Continuation lines

You can continue the parameter field of a macro instruction on one or more additional lines according to the following rules:

1. Enter a continuation character (not blank, and not part of the parameter coding) in column 72 of the line.
2. Continue the parameter field on the next line, starting in column 16. All columns to the left of column 16 must be blank.

You can code the parameter field being continued in one of two ways. Either code the parameter field through column 71, with no blanks, and continue in column 16 of the next line, or truncate the parameter field with a comma, where a comma normally falls, with at least one blank before column 71, and then continue in column 16 of the next line. Figure 2 shows an example of each method.

```
1         10        16                                44                                72
NAME1     OP1       OPERAND1,OPERAND2,OPERAND3,OPERAND4,OPERAND5,OPERAND6,OPX
                    ERAND7                            THIS IS ONE WAY
NAME2     OP2       OPERAND1,OPERAND2.                THIS IS ANOTHER WAY               X
                    OPERAND3,OPERAND4,                                                  X
                    OPERAND5,OPERAND6,OPERAND7
```

Figure 2. Continuation Coding

Chapter 2. RACF system macros

This section contains the external RACF system macros that other callers can use to invoke RACF or another security product.

The RACF system macros are received as part of the MVS program product; installations receive these macros even if they do not intend to install RACF. The RACROUTE macro instruction is the interface for all products that provide resource control.

The following lists the RACF macros that you can invoke with the full function RACROUTE interface. IBM recommends that installations use the full function RACROUTE interface instead of the independent RACF system macros. Many of the keywords and macro invocations are supported only if you invoke them using this RACROUTE interface.

- **"RACROUTE REQUEST=AUDIT: general-purpose security-audit request" on page 23** is used to audit requests to use a function or access a resource without authorization checking.
- **"RACROUTE REQUEST=AUTH: check RACF authorization" on page 30** is used to provide authorization checking when a user requests to use a function or access a resource.
- **"RACROUTE REQUEST=DEFINE: Define, modify, rename, or delete a resource for RACF" on page 59** is used to define, modify, or delete resource profiles for RACF.
- **"RACROUTE REQUEST=DIRAUTH: Check RACF-directed authorization to a sent message" on page 93** is used to perform security label authorization checking on messages for installations using SECLABELs.
- **"RACROUTE REQUEST=EXTRACT: Replace or retrieve fields" on page 99** is used to retrieve or update specified resource profile fields, to encode data, or to create an ENVR object, representing the security environment, from an existing ACEE.
- **"RACROUTE REQUEST=FASTAUTH: Verify access to resources" on page 137** is used to provide authorization checking when a user requests access to a RACF-protected resource similar to RACROUTE REQUEST=AUTH. However, RACROUTE REQUEST=FASTAUTH verifies access to resources that have RACF profiles brought into main storage.
- **"RACROUTE REQUEST=LIST: Build in-storage profiles" on page 149** is used to retrieve general resource profiles and build an in-storage list for faster authorization checking. The list is attached to the ACEE.
- **"RACROUTE REQUEST=SIGNON: Manage PV signed-on lists" on page 163** is used to allow RACF to manage the signed-on lists associated with persistent verification.
- **"RACROUTE REQUEST=STAT: Determine RACF Status" on page 182** is used to determine if RACF or another security product is active and, optionally, to determine whether protection is in effect for a given resource class. REQUEST=STAT can also be used to determine if a resource class name is defined.
- **"RACROUTE REQUEST=TOKENBLD: Build a UTOKEN" on page 190** is used to modify an existing token.
- **"RACROUTE REQUEST=TOKENMAP: Access token fields" on page 201** is used to convert a user token (UTOKEN) or a resource token (RTOKEN) into either internal or external format.

© Copyright IBM Corp. 1994, 2002

- **“RACROUTE REQUEST=TOKENXTR: Extract UTOKENS” on page 206** is used to extract a UTOKEN from the current task or address space ACEE.
- **“RACROUTE REQUEST=VERIFY: Identify and verify a RACF-defined user” on page 211** is used to provide user identification and verification.
- **“RACROUTE REQUEST=VERIFYX: Verify user and return a UTOKEN” on page 243** is used to create a user token (UTOKEN) for a unit of work. It provides for propagation of USERID, GROUPID, and SECLABEL for locally submitted jobs and is similar to VERIFY in some respects.

RACROUTE: router interface

The RACROUTE macro is the interface to RACF (or another external security manager) for MVS resource managers. The macro descriptions in this document define this interface. This does not imply that the MVS operating system supports all the functions allowed by the interface. Rather, it defines the macros and keywords that are available for MVS resource managers to implement security for data and other resources.

The RACROUTE macro invokes the system authorization facility (SAF) router. If RACF is present, the SAF router directs control to the RACF router. If RACF is active, the RACF router then invokes RACF.

It is *not* part of the intended customer programming interface for customers or customer programs to specify the CLASS=, REQSTOR=, or SUBSYS= parameters with values that are contained in the RACF router table supplied by IBM.

Note: High Level Assembler or Assembler H is required to assemble the RACROUTE macros.

In coding the RACROUTE macro to perform a particular request, you must also use the necessary parameters for that request type on the RACROUTE macro instruction. For example, if you code RACROUTE to access REQUEST=AUTH, you must code REQUEST=AUTH and any other required parameters as well as any optional ones you need from the RACROUTE REQUEST=AUTH macro. RACROUTE ensures that only the parameters applicable to the RACROUTE REQUEST=AUTH request type have been coded.

Note: When the function verifies the parameter list, if a keyword other than SEGDATA, STOKEN, TOKNIN, or TOKNOUT has an associated length and this length is zero, the function assumes that the keyword is not specified. For the SEGDATA keyword on the RACROUTE REQUEST=EXTRACT, TYPE=REPLACE, a length of zero is valid. For STOKEN, TOKNIN, and TOKNOUT, the keyword is considered not specified if both the associated length and version fields are zero in the token area.

Table 1 is a quick reference that identifies the system macro-request types that are replacements for the independent RACF system macros documented in Appendix A, “Independent RACF system macros”.

Table 1. Cross-reference for RACROUTE REQUEST=type and the Independent RACF System Macros

RACROUTE Request Type	Equivalent Independent RACF System Macro
REQUEST=AUTH	RACHECK
REQUEST=DEFINE	RACDEF

Table 1. Cross-reference for RACROUTE REQUEST=type and the Independent RACF System Macros (continued)

RACROUTE Request Type	Equivalent Independent RACF System Macro
REQUEST=EXTRACT	RACXTRT
REQUEST=FASTAUTH	FRACHECK
REQUEST=LIST	RACLIST
REQUEST=STAT	RACSTAT
REQUEST=VERIFY	RACINIT

Keyword and parameter cross-reference for RACROUTE

Table 2 lists the parameters available through the RACROUTE macro interface and cross-references them to each REQUEST=*type* in the entire RACROUTE macro. The allowable parameters for each REQUEST=*type* are marked with the symbol 'X'. See the specific RACROUTE REQUEST=*type* macro descriptions for information about the use of the parameters for each type of request.

Table 2. RACROUTE REQUEST=keyword Cross-Reference

RACROUTE Parameters	AUDIT	AUTH	DEFINE	DIRAUTH	EXTRACT	FASTAUTH	LIST	SIGNON	STAT	TOKENBLD	TOKENMAP	TOKENXTR	VERIFY	VERIFYX
ACCLVL=		X	X											
ACEE=	X	X	X		X	X	X	X	X			X	X	
ACEEALET=						X								
ACTINFO=													X	X
APPL=		X				X	X	X					X	X
ATTR=		X				X								
AUDIT=			X											
BRANCH=					X									
CHKAUTH=			X											
CLASS=	X	X	X		X	X	X		X					
COPY=									X					
COPYLEN=									X					
DATA=			X											
DATEFMT=					X									
DECOUPL=	X	X	X	X	X	X	X	X	X	X	X	X	X	X
DERIVE=					X									
DSTYPE=		X	X											
ENCRYPT=					X								X	X
ENTITY=		X	X		X	X								
ENTITYX=	X	X	X		X	X								
ENTRY=									X					

Table 2. RACROUTE REQUEST=keyword Cross-Reference (continued)

RACROUTE Parameters	AUDIT	AUTH	DEFINE	DIRAUTH	EXTRACT	FASTAUTH	LIST	SIGNON	STAT	TOKENBLD	TOKENMAP	TOKENXTR	VERIFY	VERIFYX
ENVIR=			X				X						X	
ENVRIN=						X		X					X	
ENVROUT=					X			X					X	
ERASE=			X											
ERROROPT													X	X
EVENT=	X													
EVQUAL=	X													
EXENODE=										X			X	X
EXPDT=			X											
EXPDTX=			X											
FIELDS=					X									
FILESEQ=		X	X											
FILTER=							X							
FLDACC=					X									
FORMOUT=											X			
GENERIC=		X	X		X									
GLOBAL=							X							
GROUP=								X		X			X	X
GROUPID=		X												
INSTLN=		X	X			X	X						X	X
JOBNAME=													X	X
LEVEL=			X											
LIST=							X							
LOC=							X						X	
LOG=		X		X		X							X	X
LOGSTR=	X	X				X							X	X
LSTTYPE=								X						
MATCHGN=					X									
MCLASS=			X											
MENTITY=			X											
MENTX=			X											
MF=	X	X	X	X	X	X	X	X	X	X	X	X	X	X
MGENER=			X											
MGMTCLA=			X											
MSGRTRN=		X	X										X	X

Table 2. RACROUTE REQUEST=keyword Cross-Reference (continued)

RACROUTE Parameters	AUDIT	AUTH	DEFINE	DIRAUTH	EXTRACT	FASTAUTH	LIST	SIGNON	STAT	TOKENBLD	TOKENMAP	TOKENXTR	VERIFY	VERIFYX
MSGSP=		X	X										X	X
MSGSUPP=		X	X			X							X	X
MVOLSER=			X											
NEWNAME=			X											
NEWNAMX=			X											
NEWPASS=													X	X
NOTIFY=			X											
OIDCARD=													X	X
OLDVOL=		X												
OWNER=			X				X							
PASSCHK=													X	X
PASSWRD=													X	X
PGMNAME=													X	X
POE=								X		X			X	X
POENET=								X		X			X	X
PROFILE=		X												
RACFIND=		X	X											
RECVR=		X												
RELATED=	X	X	X	X	X	X	X	X	X	X	X	X	X	X
RELEASE=	X	X	X	X	X	X	X	X	X	X	X	X	X	X
REMOTE=										X			X	X
REQSTOR=	X	X	X	X	X	X	X	X	X	X	X	X	X	X
RESOWN=			X											
RESULT=	X													
RETPD=			X											
RTOKEN=		X		X										
SECLABL=			X					X		X			X	X
SECLVL=			X											
SEGDATA=					X									
SEGMENT=					X									
SESSION=										X			X	X
SGROUP=										X			X	X
SMC=													X	X
SNODE=										X			X	X
START=													X	X

Table 2. RACROUTE REQUEST=keyword Cross-Reference (continued)

RACROUTE Parameters	AUDIT	AUTH	DEFINE	DIRAUTH	EXTRACT	FASTAUTH	LIST	SIGNON	STAT	TOKENBLD	TOKENMAP	TOKENXTR	VERIFY	VERIFYX
STAT=													X	X
STATUS=		X												
STOKEN=										X			X	X
STORCLA=			X											
SYSTEM=			X											
SUBPOOL=					X		X						X	
SUBSYS=	X	X	X	X	X	X	X	X	X	X	X	X	X	X
SUSERID=										X			X	
TAPELBL=		X	X											
TERMID=										X			X	X
TOKNIN=										X	X		X	X
TOKNOUT=								X		X	X	X	X	X
TRUSTED=										X			X	X
TYPE=			X		X			X						
UACC=			X											
UNIT=			X											
USERID=		X						X		X			X	X
UTOKEN=		X												
VERBEXIT=								X						
VOLSER=		X	X		X									
WARNING=			X											
WKAREA=						X								
WORKA=	X	X	X	X	X	X	X	X	X	X	X	X	X	X
XMREQ=											X	X		
X500NAME=													X	

Addressing considerations

If a caller is executing in 24-bit addressing mode, all parameters and parameter lists are assumed to reside below 16MB. If a caller, however, is executing in 31-bit addressing mode, all parameters and parameter lists might reside above 16MB (that is, all parameter addresses are 31-bit addresses).

All parameter lists generated by the RACROUTE macro are in a format that allows assembled code to be moved above 16MB without being reassembled.

Cross memory considerations

Except where specifically noted, RACROUTE can only be issued in non-cross-memory mode (for example, where HASN=PASN=SASN). For the services that can be invoked in cross-memory mode (where it is not the case that HASN=PASN=SASN), RACROUTE must be issued in primary ASC mode.

RACROUTE (standard form)

The standard form of the RACROUTE macro is written as follows:

name	*name*: Symbol. Begin *name* in column 1.
ƀ	One or more blanks must precede RACROUTE.
RACROUTE	
ƀ	One or more blanks must follow RACROUTE.
REQUEST=*type*	*type*: System macro request type
,WORKA=*work area addr*	*work area addr*: A-type address or register (2) - (12)
,DECOUPL=YES ,DECOUPL=NO	**Default:** DECOUPL=NO
,MSGRTRN=YES ,MSGRTRN=NO	**Default:** MSGRTRN=NO
,MSGSP=*subpool number*	*subpool number*: Decimal digit 0–255; default is 0.
,MSGSUPP=YES ,MSGSUPP=NO	**Default:** MSGSUPP=NO
,RELATED=*value*	*value*: Any valid macro keyword specified
,RELEASE=*number*	*number*: 7707, 7706, 7705, 7703, 2608, 2.6, 2.4, 2.3, 2.2, 2.1, 1.9.2, 1.9.1, 1.8.1, 1.8, 1.7 or 1.6 **Notes:** 1. **Default:** RELEASE=1.6 2. Because the format of the FMID has changed, please note that the release ID number for release 2.8 is 2608 and the release 10 number is 7703.
,REQSTOR=*reqstor addr*	*reqstor addr*: A-type address or register (2) - (12) **Note:** If you specify REQSTOR and RACF is installed, you must either update the RACF router table to match the operand or specify DECOUPL=YES.
,SUBSYS=*subsys addr*	*subsys addr*: A-type address or register (2) - (12)

Note: If you specify SUBSYS and RACF is installed, you must either update the RACF router table to match the operand or specify DECOUPL=YES.

MF=S

For RACROUTE to work correctly, once you have chosen a REQUEST, you must also specify the parameters that belong to that request. Please see the RACROUTE REQUEST= macros for the necessary parameters.

This request requires a standard 18-word save area that is pointed to by register 13.

Data areas returned to the caller by RACF are either above or below 16MB, depending upon the caller's addressing mode and the data area in question.

The parameters are explained as follows:

,REQUEST=AUDIT
,REQUEST=AUTH
,REQUEST=DEFINE
,REQUEST=DIRAUTH
,REQUEST=EXTRACT
,REQUEST=FASTAUTH
,REQUEST=LIST
,REQUEST=SIGNON
,REQUEST=STAT
,REQUEST=TOKENBLD
,REQUEST=TOKENMAP
,REQUEST=TOKENXTR
,REQUEST=VERIFY
,REQUEST=VERIFYX
specifies the system macro request type.

To invoke a system macro request supported through the RACROUTE interface, you must also code the parameters associated with that particular request type on the RACROUTE macro instruction. See the extended description for the system macro-request type you wish to use for specific information about the keywords available for that particular request.

,WORKA=*work area addr*
specifies the address of a 512-byte work area for use by the router and the RACF front-end routine. This parameter is required for execution of the RACROUTE macro. Where it is specified can vary. For example, on MF=S it must be specified on the MF=S invocation. For MF=E, it can be specified on the MF=E invocation, on an earlier MF=M invocation that points to the same parameter list, or on the MF=L invocation that built the parameter list.

,DECOUPL=YES
,DECOUPL=NO
specifies whether or not REQSTOR and SUBSYS are to be used for caller identification or to determine whether RACF function is to be performed or bypassed. (See the SUBSYS keyword.)

DECOUPL=YES indicates that REQSTOR and SUBSYS parameters do not require corresponding entries in the RACF router table because they are used

only for caller identification. Specifying DECOUPL=YES also indicates that all checking against the RACF router table is bypassed. (Checking for class entries is bypassed also.) Request processing will be performed unconditionally.

DECOUPL=NO indicates that there is checking against the RACF router table. REQSTOR and SUBSYS parameters must have corresponding entries in the RACF router table, because they are used for identification, and to verify against existing entries in the router table. The corresponding entries must exist in the RACF router table before request processing is performed.

DECOUPL=NO is the default.

,MSGRTRN=YES
,MSGRTRN=NO

specifies whether you want to use message return processing. You can use this parameter in conjunction with the other RACROUTE MSG*xxxx* parameters to store and forward messages resulting from this service.

Notes:

1. This parameter applies to REQUEST=AUTH, REQUEST=DEFINE, REQUEST=VERIFY, and REQUEST=VERIFYX.
2. Messages ICH70001I and ICH70002I, which can occur during RACROUTE REQUEST=VERIFY processing, are not returned during message return processing if both the MSGRTRN=YES and ACEE= keywords are specified.

,MSGSP=*subpool number*

specifies the storage subpool into which you want RACF messages returned. You can use ,MSGSP in conjunction with the other RACROUTE MSG*xxxx* parameters to store and forward RACF messages. If you do not specify a subpool, the default subpool is 0. An unauthorized caller can only specify subpools 0 through 127.

Notes:

1. While IBM recommends that you specify a storage subpool, rather than allowing it to default, you should take some care in selecting a subpool, as MVS makes certain assumptions about subpool usage and characteristics. In particular, using subpool 0 or 250, or any subpool documented in *z/OS MVS Programming: Assembler Services Guide* as having a storage key of USER (for example, 227–231 and 241) might give unpredictable results.
2. If a common-area subpool (for example 226–228, 231, 239, 241, 245, 247, or 248) is used and not freed before the job terminates, then the job might show up in the exception reports of RMF (or other monitoring tools that support the tracking of common-area storage utilization) as owning common storage. Before your job terminates, it should issue a FREEMAIN to free this common storage.
3. This parameter applies to REQUEST=AUTH, REQUEST=DEFINE, REQUEST=VERIFY, and REQUEST=VERIFYX.
4. IRR008I-IRR018I, ICH408I, ICH70001I, ICH70002I, ICH70003I, ICH70004I, ICH70005I, ICH70006I, and ICH70007I messages can be returned for RACF.
5. When control returns from RACROUTE, the RACROUTE parameter-list field is mapped by SAFPMSAD in the ICHSAFP mapping macro. SAFPMSAD is nonzero if messages have been returned. This field contains the address of an area that consists of two fullwords followed by the message itself in write-to-operator (WTO) parameter-list format. The first word is the length of

the area including the two-fullword header; the second word points to the next message area, if there is one, or contains zero if no more messages areas exist.

You must issue the FREEMAIN macro to release the message area.

,MSGSUPP=YES
,MSGSUPP=NO

specifies whether you want to suppress WTO messages from within RACF processing. You can use this parameter in conjunction with the other RACROUTE MSG*xxxx* parameters to store and forward messages resulting from this service.

Notes:

1. This parameter applies to REQUEST=AUTH, REQUEST=DEFINE, REQUEST=VERIFY, REQUEST=VERIFYX, REQUEST=FASTAUTH, and, for RACF only, message ICH408I and associated auditing support informational messages (IRR series), as well as ICH70001I, ICH70002I, ICH70003I, ICH70006I, and ICH70007I.

   LOG=NONE suppresses both messages and SMF records regardless of MSGSUPP=NO.

,RELATED=*value*

specifies information used to make notes to yourself to document macro instructions by relating functions or services to corresponding functions or services. You can use any format and put in any length and type of data you want.

,RELEASE=*number*

specifies the release level of the parameter list to be generated by this macro. Through RACF 2.2, it corresponds to the FMID of the RACF release. After that, when RACF became solely an element of OS/390 or z/OS, it corresponds to the FMID of the RACF. For example,

- 2.2 corresponds to FMID HRF2220 (RACF 2.2, OS/390 Security Server V1R1 or OS/390 Security Server V1R2),
- 2.3 corresponds to FMID HRF2230 (OS/390 Security Server V1R3),
- 2.4 corresponds to FMID HRF2240 (OS/390 Security Server V2R4),
- 2.6 corresponds to FMID HRF2260 (OS/390 Security Server V2R6),
- 2608 corresponds to FMID HRF2608 (OS/390 Security Server V2R8),
- 7703 corresponds to FMID HRF7703 (OS/390 SecureWay Security Server V2R10),
- 7705 corresponds to FMID HRF7705 (z/OS SecureWay Security Server V1R2), and
- 7706 corresponds to FMID HRF7706 (z/OS Security Server V1R3).
- 7707 corresponds to FMID HRF7707 (z/OS Security Server V1R4).

To use the parameters associated with a release, you must specify the number of that release or a later release. If you specify an earlier release level, the parameter is not accepted by macro processing, and an error message is issued at assembly time. If parameters have a release dependency, the parameter descriptions with each request type identify the release number required.

The default release is 1.6.

,REQSTOR=*reqstor addr*
specifies the address of an 8-byte character field containing the name of the piece of code that is making the request. (This address identifies a unique piece of code within a set of code that exists in a subsystem.) If this operand is omitted, a string of eight blanks is assumed.

You do not have to put a matching entry in the router table if you specify DECOUPL=YES (to bypass RACF router table checking). (See the DECOUPL keyword.)

If DECOUPL=NO is specified and you specify this operand and RACF is installed, you have to update the RACF router table with a matching entry. If you do not update the table, RACF processing is bypassed. For a description of the RACF router table and the macro used to update it, see "ICHRFRTB Macro" in *z/OS Security Server RACF Macros and Interfaces*.

,SUBSYS=*subsys addr*
specifies the address of an 8-byte character field containing the calling subsystem's name, version, and release level. If this operand is omitted, a string of eight blanks is assumed.

You do not have to put a matching entry in the router table if you specify DECOUPL=YES (to bypass the RACF router table checking). (See the DECOUPL keyword.)

If DECOUPL=NO is specified and you specify this operand and RACF is installed, you have to update the RACF router table with a matching entry. If you do not update the table, RACF processing is bypassed.

For a description of the RACF router table and the macro used to update it, see "ICHRFRTB Macro" in *z/OS Security Server RACF Macros and Interfaces*.

Return codes

These return codes represent return codes from all invocations of the RACROUTE macro; for example, REQUEST=AUTH, REQUEST=VERIFY. For specific information on the success or failure of the invocation in question, see the section of this document that describes that invocation.

When you execute the macro, space for RACF return codes and their respective reason codes is reserved in the first two words of the RACROUTE parameter list. You can access them using the ICHSAFP mapping by loading the ICHSAFP pointer with the label that you specified on the list form of the macro. When control is returned, register 15 contains one of the following SAF return codes.

Note to Reader
All return and reason codes are shown in hexadecimal. Also, please note that SAF return code is presented as SAF RC in the following section.

SAF RC	Meaning
00	The requested security function completed successfully. For example, if the requested function was 'AUTH', the authorization request was accepted.
04	The requested function has not been processed. For example, if the request was 'AUTH', RACF or the SAF router could neither accept nor fail the request. The following are some possible reasons for a request's not being processed.

- The SAF router is not active.
- The RACF front-end routine detected that a null action was requested for the specified request type, resource type, and subsystem ID.
- The combination of request, resource, and subsystem could not be found in the RACF router table.
- RACF is not active on the system, and RACFIND=YES was not specified, and there is no RACROUTE installation exit routine (or an exit originated a return code of 4).
- RACF is active on the system, but no profile exists for the specified resource.
- The class is not defined to RACF.

08 The requested function was processed by RACF, the SAF router, or the router exit (ICHRTX00) and failed. If the requested function was AUTH, the authorization request has failed. For example, if RACF is inactive for an 'AUTH' request with RACFIND=YES, the SAF router fails the request. The RACF- or router-exit return code and reason codes are returned in the first two words of the RACROUTE input parameter list.

Example 1

Operation: Invoke the SAF router to perform authorization checking, using the standard form, for a non-VSAM data set residing on the volume pointed to by register 8. Register 7 points to the data set name and the RACF user is requesting the highest level of control over the data set. The "RACF-indicated" bit in the data set's DSCB is on.

```
RACROUTE  REQUEST=AUTH,WORKA=RACWK,ENTITY=((R7)),        X
          VOLSER=(R8),CLASS='DATASET',ATTR=ALTER,        X
          RACFIND=YES
  .
  .
RACWK     DS  CL512
```

Example 2

Operation: Invoke the SAF router to perform authorization checking, using the standard form, for an IMS/VS transaction pointed to by register 5. The user requests only read access.

```
RACROUTE  REQUEST=FASTAUTH,                            X
          WORKA=RACWK,ENTITY=(R5),                     X
          CLASS='TIMS',WKAREA=FRACWK,                  X
          ATTR=READ
  .
  .
  .
FRACWK    DS  16F
RACWK     DS  CL512
```

RACROUTE (list form)

The list form of the RACROUTE macro is written as follows. Refer to the Standard Form of the RACROUTE macro to determine additional parameters that are required by the time the RACROUTE service is invoked using the Execute Form of the macro.

name	*name*: Symbol. Begin *name* in column 1.
b	One or more blanks must precede RACROUTE.
RACROUTE	
b	One or more blanks must follow RACROUTE.
REQUEST=*type*	*type*: System macro request type
,WORKA=*work area addr*	*work area addr*: A-type address
,DECOUPL=YES ,DECOUPL=NO	**Default:** DECOUPL=NO
,MSGRTRN=YES ,MSGRTRN=NO	**Default:** MSGRTRN=NO
,MSGSP=*subpool number*	*subpool number*: Decimal digit 0–255; default is 0.
,MSGSUPP=YES ,MSGSUPP=NO	**Default:** MSGSUPP=NO
,RELATED=*value*	*value*: Any valid macro keyword specified
,RELEASE=*number*	**Default:** RELEASE=1.6
,REQSTOR=*reqstor addr*	*reqstor addr*: A-type address **Note:** If you specify REQSTOR and RACF is installed, you must either update the RACF router table to match the operand or specify DECOUPL=YES.
,SUBSYS=*subsys addr*	*subsys addr*: A-type address **Note:** If you specify SUBSYS and RACF is installed, you must either update the RACF router table to match the operand or specify DECOUPL=YES.
,MF=L	

The REQUEST= parameters are explained under their respective invocations. The RACROUTE parameters are explained under the standard form of the RACROUTE macro with the following exception:

,MF=L
specifies the list form of the RACROUTE macro instruction.

RACROUTE (execute form)

The execute form of the RACROUTE macro is written as follows. Refer to the Standard Form of the RACROUTE macro to determine additional parameters that are required by the time the RACROUTE service is invoked using the Execute form of the macro.

name	*name*: Symbol. Begin *name* in column 1.
b	One or more blanks must precede RACROUTE.
RACROUTE	
b	One or more blanks must follow RACROUTE.
REQUEST=*type*	*type*: System macro request type
,WORKA=*work area addr*	*work area addr*: Rx-type address or register (2) - (12)
,DECOUPL=YES ,DECOUPL=NO	
,MSGRTRN=YES ,MSGRTRN=NO	
,MSGSP=*subpool number*	*subpool number*: Decimal digit 0–255
,MSGSUPP=YES ,MSGSUPP=NO	
,RELATED=*value*	*value*: Any valid macro keyword specified
,RELEASE=*number*	**Default:** RELEASE=1.6
,REQSTOR=*reqstor addr*	*reqstor addr*: Rx-type address or register (2) - (12) **Note:** If you specify REQSTOR and RACF is installed, you must either update the RACF router table to match the operand or specify DECOUPL=YES.
,SUBSYS=*subsys addr*	*subsys addr*: Rx-type address or register (2) - (12) **Note:** If you specify SUBSYS and RACF is installed, you must either update the RACF router table to match the operand or specify DECOUPL=YES.
,MF=(E,*ctrl addr*)	*ctrl addr*: Rx-type address or register (1), (2) - (12)

The REQUEST= parameters are explained under their respective invocations. The RACROUTE parameters are explained under the standard form of the RACROUTE macro with the following exceptions:

,MF=(E,*ctrl addr*)
specifies the execute form of the RACROUTE macro where *ctrl addr* is the address of the associated parameter list.

RACROUTE (modify form)

The modify form of the RACROUTE macro is written as follows. Refer to the Standard Form of the RACROUTE macro to determine additional parameters that are required by the time the RACROUTE service is invoked using the Execute form of the macro.

name	*name*: Symbol. Begin *name* in column 1.
ƀ	One or more blanks must precede RACROUTE.
RACROUTE	
ƀ	One or more blanks must follow RACROUTE.
REQUEST=*type*	*type*: System macro request type
,WORKA=*work area addr*	*work area addr*: Rx-type address or register (2) - (12)
,DECOUPL=YES ,DECOUPL=NO	
,MSGRTRN=YES ,MSGRTRN=NO	
,MSGSP=*subpool number*	*subpool number*: Decimal digit 0–255
,MSGSUPP=YES ,MSGSUPP=NO	
,RELATED=*value*	*value*: Any valid macro keyword specified
,RELEASE=*number*	**Default:** RELEASE=1.6
,REQSTOR=*reqstor addr*	*reqstor addr*: Rx-type address or register (2) - (12) **Note:** If you specify REQSTOR and RACF is installed, you must either update the RACF router table to match the operand or specify DECOUPL=YES.
,SUBSYS=*subsys addr*	*subsys addr*: Rx-type address or register (2) - (12) **Note:** If you specify SUBSYS and RACF is installed, you must either update the RACF router table to match the operand or specify DECOUPL=YES.

,MF=(M,*ctrl addr*) *ctrl addr*: Rx-type address or register (1), (2) - (12)

The REQUEST= parameters are explained under their respective invocations. The RACROUTE parameters are explained under the standard form of the RACROUTE macro with the following exceptions:

,MF=(M,*ctrl addr*)
specifies the modify form of the RACROUTE macro, where *ctrl addr* is the address of the associated parameter list. The macro updates the parameter list, but does not execute the macro.

Chapter 3. System Macros

RACROUTE REQUEST=AUDIT: general-purpose security-audit request

The RACROUTE REQUEST=AUDIT macro is a general-purpose security-audit request that can be used to audit the specified resource name (ENTITYX) and action. This request records events in system-management-facilities (SMF) type 80 records, and issues messages to the network security administrator.

To use this service, you must specify RELEASE=1.9 or a later release number.

REQUEST=AUDIT is an SRB-mode-compatible service on MVS/ESA or when no profile is used (for example, in an audit initialed through LOGOPTIONS). If the caller is not in SRB mode, the caller must be APF-authorized or in supervisor state or system key.

RACROUTE REQUEST=AUDIT (standard form)

The standard form of the RACROUTE REQUEST=AUDIT macro is written as follows. For a description of additional keywords that you can code and additional parameters that are required on the RACROUTE request, but that are not specific to this request type, see “RACROUTE (standard form)” on page 13.

Note

RACROUTE REQUEST=AUDIT requires an ACEE. For most applications, the system will have created an ACEE to represent the active user. However, for special cases where no ACEE exists, the invoker must create one before invoking RACROUTE REQUEST=AUDIT.

The most common way to create an ACEE is to issue a RACROUTE REQUEST=VERIFY, specifying ENVIR=CREATE. After all RACROUTE invocations are complete, the invoker should issue RACROUTE REQUEST=VERIFY with ENVIR=DELETE specified, to delete the ACEE previously created.

Application programs must be structured so that a task requesting RACF services does not do so while other I/O initiated by the task is outstanding. If such I/O is required, the task should either wait for the other I/O to complete before requesting RACF services, or the other I/O should be initiated under a separate task. This is necessary to assure proper processing in recovery situations.

name	*name*: Symbol. Begin *name* in column 1.
b	One or more blanks must precede RACROUTE.
RACROUTE	
b	One or more blanks must follow RACROUTE.

© Copyright IBM Corp. 1994, 2002

REQUEST=AUDIT	
,EVENT=*'event name'*	*event name*: 1–8 character name
,EVENT=*event name addr*	*event name addr*: A-type address or register (2) - (12)
,EVQUAL=*number*	*number*: 0–99
,EVQUAL=*reg*	*reg*: Register (2) - (12)
,ACEE=*acee addr*	*acee addr*: A-type address or register (2) - (12)
,CLASS=*'class name'*	*class name*: 1–8 character name
,CLASS=*class name addr*	*class name addr*: A-type address or register (2) - (12)
,ENTITYX=*extended resource name addr*	*extended resource name addr*: A-type address or register (2) - (12)
,LOGSTR=*logstr addr*	*logstr addr*: A-type address or register (2) - (12)
,RESULT=SUCCESS ,RESULT=FAILURE	**Default:** RESULT=SUCCESS
,MF=S	

The parameters are explained as follows:

,ACEE=*acee addr*
specifies the address of an ACEE passed on a REQUEST=AUDIT. RACF searches local profiles chained off the ACEE that have been placed there with the RACROUTE REQUEST=LIST macro.

,CLASS=*'class name'*
,CLASS=*class name addr*
specifies that you want RACF to perform authorization checking for a resource in this class. You can specify the class name or the class-name address. If you specify a class-name address, the address must point to an 8-byte field that contains the class name. The class name must be left-justified and padded to the right with blanks, if necessary.

For the event "GENERAL", REQUEST=AUDIT allows print service facility (PSF) on MVS to perform auditing. Neither profiles nor settings specified in SETROPTS LOGOPTIONS are checked. It is assumed the requester always wants an SMF record cut. If the parameters are correct, auditing is always done.

For the class APPCLU, if SETROPTS LOGOPTIONS other than DEFAULT is specified, RACF uses the options to determine what auditing to perform. If SETROPTS LOGOPTIONS is set to DEFAULT, RACF searches the resource profile that matches the entity and uses the auditing options specified in the profile. If RACF does not find a corresponding profile, it does not perform any auditing. A message is issued to the network security administrator.

,ENTITYX=*extended resource name addr*

specifies the address of a structure that consists of two 2-byte length fields, followed by the entity name.

- The first 2-byte field specifies a buffer length that can be 0–255 bytes. This length field refers to the length of the buffer that contains the entity name; it does not include the length of either length field.
- The second 2-byte field specifies the actual length of the entity name. This length field includes the length of the actual name without any trailing blanks; it does not include the length of either length field.

These two length fields can be used in several different ways:

- If you know the length of the entity name, you can specify 0 in the first field and the length of the entity name in the second field. When you specify the second field, note that each byte counts. This means the entity name that you specify must match exactly the entity name on the RACF database.
- If you choose to place the entity name in a buffer area, specify the length of the buffer in the first field. For the second field, do one of the following:
  - If you know the length of the entity name, specify the length in the second field. The length of the first field can be from 0 to 255, but *must* be equal to or greater than the length of the second field.
  - If you do not know the length of the entity name, specify 0 in the second field, and RACF counts the number of characters in the entity name.

,EVENT=*'event name'*
,EVENT=*event name addr*

specifies the name of the event that you want RACF to log. You can specify the event name or the event-name address. If you specify the event-name address, it must point to an 8-byte field that contains the event name. The event name must be left-justified and padded to the right with blanks.

The events that you can log with Release 1.9 or later are APPCLU (event code 26) and GENERAL (event code 27).

The event code GENERAL allows auditing of PSF security information. PSF uses qualify code 0 for this event. To achieve auditing, the LOGSTR and RESULT keywords should also be specified.

,EVQUAL=*number*
,EVQUAL=*reg*

specifies the event-code qualifier for the event that you want logged. If you specify a register rather than a number, you must enter the event-code qualifier in the low-order halfword of the register or the field the address in the register points to. With APPCLU, the qualifier can be from 0 to 12; with GENERAL, the qualifier can be from 0 to 99. See “SMF Records” in *z/OS Security Server RACF Macros and Interfaces* for a description of RACF event-code qualifiers for an event.

,LOGSTR=*logstr addr*

specifies the address of a 1-byte length field followed by up to 255 bytes of character data that are written to the SMF data set together with RACF audit information. This provides a place for additional diagnostic information that the RACROUTE issuer wants included in the SMF audit records. It can be any application specific information that pertains to this particular request.

The Report Writer puts LOGSTR in all its process records, but it cannot sort on the LOGSTR field.

,RESULT=SUCCESS

,RESULT=FAILURE
specifies that the resource manager (for example, PSF) can specify a RESULT keyword that causes the audit record to be marked as a success or as a failure.

The default is RESULT=SUCCESS.

,MF=S
specifies the standard form of the RACROUTE REQUEST=AUDIT macro instruction.

Return codes and reason codes

When you execute the macro, space for the RACF return code and reason code is reserved in the first two words of the RACROUTE parameter list. You can access them using the ICHSAFP mapping macro by loading the ICHSAFP pointer with the label that you specified on the list form of the macro. When control is returned, register 15 contains the SAF return code.

Note to Reader
All return and reason codes are shown in hexadecimal. Also, please note that SAF return code is presented as SAF RC and RACF return code is presented as RACF RC in the following section.

SAF RC	Meaning
00	RACROUTE REQUEST=AUDIT has completed successfully.

RACF RC	Meaning
00	The requested security function has completed successfully.

SAF RC	Meaning
04	The requested function could not be performed.

RACF RC	Meaning
00	No security decision could be made.

Reason Code	Meaning
00	The RACF router was not loaded; the request, resource, subsystem combination could not be found in the RACF ROUTER table; no successful exit processing can take place.

RACF RC	Meaning
04	The class is not active.

SAF RC	Meaning
08	The requested function failed.

RACF RC	Meaning
08	The class was not specified or not defined to RACF.
0C	Indicates an internal error from RACXTRT.

Reason Code	Meaning
xxyy	*xx* is a return code from RACXTRT; *yy* is a reason code from RACXTRT.

10 Indicates parameter list-error as described by the following hex reason codes:

Reason Code	Meaning
00	Event not valid
04	Event-code qualifier not valid
08	Parameter-list version not valid
0C	Parameter-list length not valid
10	Entity not valid.

14 No auditing is done. One of the following is true:
- No profile is found and LOGOPTIONS is not set for this class.
- No profile is found and the class RACLISTed.
- The class is not RACLISTed.

Example 1

Operation: Invoke the RACROUTE REQUEST=AUDIT macro to search for a profile in the APPCLU class to match the entity specified in LULUPAIR. The profiles to be searched have been placed in storage using the RACROUTE REQUEST=LIST macro. Be aware that if SETROPTS LOGOPTIONS other than DEFAULT has been specified for the APPCLU class, those auditing options are the ones that RACF uses. Set the auditing options so that an SMF 80 event APPCLU event-code qualifier 04 (partner session keys were not equal) is logged. A message is sent to the security console, and message ICH70005I is sent to the caller.

Note: The message cannot be received by anyone other than the caller to which it was directed.

```
RACROUTE  REQUEST=AUDIT,CLASS='APPCLU',ENTITYX=LULUPAIR, X
          ACEE=VTAMACEE,EVENT='APPCLU',EVQUAL=CODE04,    X
          WORKA=RACWK,RELEASE=1.9
  .
  .
RACWK     DS  CL512
LULUPAIR  DS  0CL16
BUFLEN    DC  AL2(12)
ENTLEN    DC  AL2(12)
ENTITYX   DC  CL12'NET1.LU1.LU2'
```

RACROUTE REQUEST=AUDIT (list form)

The list form of the RACROUTE REQUEST=AUDIT macro is written as follows. Refer to the Standard Form of the RACROUTE REQUEST=AUDIT macro to determine additional parameters that are required by the time the RACROUTE service is invoked using the Execute form of the macro.

name — *name*: Symbol. Begin *name* in column 1.

b — One or more blanks must precede RACROUTE.

RACROUTE

b — One or more blanks must follow RACROUTE.

REQUEST=AUDIT	
,ACEE=*acee addr*	*acee addr*: A-type address
,CLASS=*'class name'* ,CLASS=*class name addr*	*class name*: 1–8 character name *class name addr*: A-type address
,ENTITYX=*extended resource name addr*	*extended resource name addr*: A-type address
,EVENT=*'event name'* ,EVENT=*event name addr*	*event name*: 1–8 character name *event name addr*: A-type address
,EVQUAL=*number*	*number*: 0–99
,LOGSTR=*logstr addr*	*logstr addr*: A-type address
,RESULT=SUCCESS ,RESULT=FAILURE ,MF=L	**Default:** RESULT=SUCCESS

The parameters are explained under the standard form of the RACROUTE REQUEST=AUDIT macro with the following exception:

,MF=L
specifies the list form of the RACROUTE REQUEST=AUDIT macro instruction.

RACROUTE REQUEST=AUDIT (execute form)

The execute form of the RACROUTE REQUEST=AUDIT macro is written as follows. Refer to the Standard Form of the RACROUTE REQUEST=AUDIT macro to determine additional parameters that are required by the time the RACROUTE service is invoked using the Execute form of the macro.

name	*name*: Symbol. Begin *name* in column 1.
b	One or more blanks must precede RACROUTE.
RACROUTE	
b	One or more blanks must follow RACROUTE.
REQUEST=AUDIT	
,ACEE=*acee addr*	*acee addr*: Rx-type address or register (2) - (12)

,CLASS=*class name addr*	*class name addr*: Rx-type address or register (2) - (12)
,ENTITYX=*extended resource name addr*	*extended resource name addr*: Rx-type address or register (2) - (12)
,EVENT=*event name addr*	*event name addr*: Rx-type address or register (2) - (12)
,EVQUAL=*number* ,EVQUAL=*reg*	*number*: 0–99 *reg*: Register (2) - (12)
,LOGSTR=*logstr addr*	*logstr addr*: Rx-type address or register (2) - (12)
,RESULT=SUCCESS ,RESULT=FAILURE	
,MF=(E,*ctrl addr*)	*ctrl addr*: Rx-type address or register (1) - (12)

The parameters are explained under the standard form of the RACROUTE REQUEST=AUDIT macro with the following exception:

,MF=(E,*ctrl addr*)
specifies the execute form of the RACROUTE REQUEST=AUDIT macro instruction.

RACROUTE REQUEST=AUDIT (modify form)

The modify form of the RACROUTE REQUEST=AUDIT macro is written as follows. Refer to the Standard Form of the RACROUTE REQUEST=AUDIT macro to determine additional parameters that are required by the time the RACROUTE service is invoked using the Execute form of the macro.

name	*name*: Symbol. Begin *name* in column 1.
b	One or more blanks must precede RACROUTE.
RACROUTE	
b	One or more blanks must follow RACROUTE.
REQUEST=AUDIT	
,ACEE=*acee addr*	*acee addr*: Rx-type address or register (2) - (12)
,CLASS=*class name addr*	*class name addr*: Rx-type address or register (2) - (12)
,ENTITYX=*extended resource name addr*	*extended resource name addr*: Rx-type address or register (2) - (12)

,EVENT=*event name addr*	*event name addr*: Rx-type address or register (2) - (12)
,EVQUAL=*number*	*number*: 0–99
,EVQUAL=*reg*	*reg*: Register (2) - (12)
,LOGSTR=*logstr addr*	*logstr addr*: Rx-type address or register (2) - (12)
,RESULT=SUCCESS	
,RESULT=FAILURE	
,MF=M	

The parameters are explained under the standard form of the RACROUTE REQUEST=AUDIT macro with the following exception:

,MF=M
specifies the modify form of the RACROUTE REQUEST=AUDIT macro instruction.

RACROUTE REQUEST=AUTH: check RACF authorization

The RACROUTE REQUEST=AUTH macro checks a user's authority to access a resource, based on a profile in the RACF database when a user requests access to a RACF-protected resource.

The types of checks available are:

1. First-party: You do not provide any of the applicable parameters and RACF locates your ACEE and checks your authority.
2. Second-party: You provide only an ACEE (without the UTOKEN, USERID, and GROUPID parameters), and RACF checks that user's authority instead of yours.
3. Third-party: You provide UTOKEN, USERID, or GROUPID and RACF checks the specified user's or group's authority. This requires use of REQUEST=VERIFY by the REQUEST=AUTH processing, and AUTH anchors the resulting ACEE in your ACEE (or in the ACEE specified by ACEE). This circumvents the VERIFY processing if another check for the same user is required later on.

   For third-party authorization checking, RACF performs the following steps:

   a. If the USERID keyword is *NONE* and GROUPID is not specified, RACF checks using a default (undefined-user) ACEE.
   b. Before building the security environment (ACEE) to perform this third-party authorization request, RACF checks to see if an ACEE is already available that is compatible with the USERID, GROUPID, and/or UTOKEN specified on this RACROUTE request. The ACEE can be either:
      - The ACEE of the user issuing the RACROUTE
      - The most recent ACEE created by that user when doing a previous third-party authorization request.

      If either of these ACEEs is compatible with the current RACROUTE request, RACF uses the existing ACEE rather than creating a new one.

c. The user specified by USERID or UTOKEN must not be a revoked user, or the RACROUTE request fails.

Note: If the calling program does not specify the GROUPID keyword, the internal RACROUTE REQUEST=VERIFY function uses the default group associated with the specified user ID.

The RACROUTE REQUEST=AUTH caller must be authorized (APF-authorized in system key 0–7, or in supervisor state) for certain keywords. See the keyword descriptions for authorization requirements.

The caller cannot hold any locks when issuing RACROUTE REQUEST=AUTH.

RACROUTE REQUEST=AUTH (standard form)

The standard form of the RACROUTE REQUEST=AUTH macro is written as follows. For a description of additional keywords that you can code and additional parameters that are required on the RACROUTE request, but that are not specific to this request type, see “RACROUTE (standard form)” on page 13.

Note

RACROUTE REQUEST=AUTH requires an ACEE. For most applications, the system will have created an ACEE to represent the active user. However, for special cases where no ACEE exists, the invoker must create one before invoking RACROUTE REQUEST=AUTH. If there is no ACEE, the result is ABEND 582 with reason code 00.

The most common way to create an ACEE is to issue a RACROUTE REQUEST=VERIFY, specifying ENVIR=CREATE. After all RACROUTE invocations are complete, the invoker should issue RACROUTE REQUEST=VERIFY with ENVIR=DELETE specified, to delete the ACEE previously created.

Application programs must be structured so that a task requesting RACF services does not do so while other I/O initiated by the task is outstanding. If such I/O is required, the task should either wait for the other I/O to complete before requesting RACF services, or the other I/O should be initiated under a separate task. This is necessary to assure proper processing in recovery situations.

name	*name*: Symbol. Begin *name* in column 1.
b	One or more blanks must precede RACROUTE.
RACROUTE	
b	One or more blanks must follow RACROUTE.
REQUEST=AUTH	

,CLASS=*'class name'*	*class name*: 1–8 character name
,CLASS=*class name addr*	*class name addr*: A-type address or register (2) - (12)
,ENTITY=*resource name addr*	*resource name addr*: A-type address only
,ENTITY=(*resource name addr*)	*resource name addr*: A-type address or register (2) - (12)
,ENTITY=(*resource name addr*,CSA)	
,ENTITY=(*resource name addr*,PRIVATE)	
,ENTITY=(*resource name addr*,NONE)	
,ENTITYX=*extended resource name addr*	*extended resource name addr*: A-type address only
,ENTITYX=(*extended resource name addr*)	*extended resource name addr*: A-type address or register (2) - (12)
,ENTITYX=(*extended resource name addr*,CSA)	
,ENTITYX=(*extended resource name addr*,PRIVATE)	
,ENTITYX=(*extended resource name addr*,NONE)	
,PROFILE=*profile addr*	*profile addr*: A-type address or register (2) - (12)
,VOLSER=*vol addr*	*vol addr*: A-type address or register (2) - (12) **Note:** VOLSER is required for CLASS=DATASET and DSTYPE not equal to M when a discrete profile name is used and when ENTITY is also coded.
,ACCLVL=*access level addr*	*access level addr*: A-type address or register (2) - (12)
,ACCLVL=(*access level addr*,*parm list addr*)	*parm list addr*: A-type address or register (2) - (12)
,ACEE=*acee addr*	*acee addr*: A-type address or register (2) - (12)
,APPL=*'applname'*	*applname*: 1–8 character name
,APPL=*applname addr*	*applname addr*: A-type address or register (2) - (12)
,ATTR=READ	**Default:** ATTR=READ
,ATTR=UPDATE	
,ATTR=CONTROL	
,ATTR=ALTER	
,ATTR=*reg*	*reg*: register (2) - (12)
,DSTYPE=N	**Default:** DSTYPE=N
,DSTYPE=V	
,DSTYPE=M	
,DSTYPE=T	
,FILESEQ=*number*	*number*: 1–9999

,FILESEQ=*reg*	*reg*: register (2) - (12)
,GENERIC=YES ,GENERIC=ASIS	**Default:** GENERIC=ASIS
,GROUPID=*'groupid'*	*groupid*: 1–8 character group ID
,GROUPID=*groupname addr*	*groupname addr*: A-type address or register (2) - (12)
,INSTLN=*parm list addr*	*parm list addr*: A-type address or register (2) - (12)
,LOG=ASIS ,LOG=NOFAIL ,LOG=NONE ,LOG=NOSTAT	**Default:** LOG=ASIS
,LOGSTR=*logstr addr*	*logstr addr*: A-type address or register (2) - (12)
,OLDVOL=*old vol addr*	*old vol addr*: A-type address or register (2) - (12)
,RACFIND=YES ,RACFIND=NO	
,RECVR=*recvr addr*	*recvr addr*: A-type address or register (2) - (12)
,RTOKEN=*rtoken addr*	*rtoken addr*: A-type address or register (2) - (12)
,STATUS=NONE ,STATUS=ERASE ,STATUS=EVERDOM ,STATUS=WRITEONLY ,STATUS=ACCESS	**Default:** STATUS=NONE
,SYSTEM=NO ,SYSTEM=YES	**Default:** SYSTEM=NO **Note:** To use the SYSTEM= keyword you must specify RELEASE=1.9.2 or later.
,TAPELBL=STD ,TAPELBL=BLP ,TAPELBL=NL	**Default:** TAPELBL=STD
,USERID=*'userid'*	*userid*: 1–8 character user ID
,USERID=*userid addr*	*userid addr*: A-type address or register (2) - (12)
,UTOKEN=*token addr*	*token addr*: A-type address or register (2) - (12)
,MF=S	

When SYSTEM=YES is specified, only the following keywords are valid:

,CLASS=*'class name'*	*class name*: 1–8 character name
,CLASS=*class name addr*	*class name addr*: A-type address or register (2) - (12)

REQUEST=AUTH

,ENTITY=*resource name addr*	*resource name addr*: A-type address only
,ENTITY=(*resource name addr*)	*resource name addr*: A-type address or register (2) - (12)
,ATTR=READ	**Default:** ATTR=READ
,ATTR=UPDATE	
,ATTR=CONTROL	
,ATTR=ALTER	
,ATTR=*reg*	*reg*: register (2) - (12)
,APPL=*'applname'*	*applname*: 1–8 character name
,APPL=*applname addr*	*applname addr*: A-type address or register (2) - (12)
,INSTLN=*parm list addr*	*parm list addr*: A-type address or register (2) - (12)
,LOG=ASIS	**Default:** LOG=ASIS
,LOG=NOFAIL	
,LOG=NONE	
,LOG=NOSTAT	

The parameters are explained as follows:

,ACCLVL=*access level addr*
,ACCLVL=(*access level addr,parm list addr***)**
specifies the tape-label access-level information for the MVS tape-label functions. The access level pointed to by the specified address is a 1-byte length field, containing the value (0–8) of the length of the following data, followed by an 8-character string that is passed to the RACROUTE REQUEST=AUTH installation-exit routines. The optional parameter list pointed to by the specified address contains additional information to be passed to the RACROUTE REQUEST=AUTH installation exit routines. RACF does not inspect or modify this information.

,ACEE=*acee addr*
specifies the address of the ACEE to be used during RACF authorization-check processing.

Programs must be APF-authorized, system key 0–7, or in supervisor state to use the ACEE parameter.

If no ACEE is specified, RACF uses the TASK ACEE pointer (TCBSENV) in the extended task control block (TCB). Otherwise, or if the TASK ACEE pointer is zero, RACF uses the main ACEE for the address space. The main ACEE is pointed to by the ASXBSENV field of the address-space extension block.

,APPL=*'applname'*
,APPL=*applname addr*
specifies the name of the application requesting authorization checking. The *application name* is not used for the authorization checking process but is made available to the installation exit routine or routines called by the RACROUTE REQUEST=AUTH routine. If the address is specified, the address must point to an 8-byte field containing the application name, left-justified and padded with blanks.

,ATTR=READ
,ATTR=UPDATE
,ATTR=CONTROL
,ATTR=ALTER
,ATTR=*reg*

specifies the level of authority requested. RACF checks the resource profile protecting the resource identified by the ENTITY and CLASS keywords. The values have the following hierarchical order:

READ
UPDATE
CONTROL
ALTER

That is, if a user has update authority and ATTR=READ is specified, RACF returns a return code of 0. If ATTR=CONTROL, RACF returns a return code of 8.

If a register is specified, the register must contain one of the following codes in the low-order byte of the register:

X'02' READ
X'04' UPDATE
X'08' CONTROL
X'80' ALTER

The default is ATTR=READ.

,CLASS=*'class name'*
,CLASS=*class name addr*

specifies that RACF authorization checking is to be performed for a resource of the specified class. The address must point to a 1-byte field indicating the length of the class name, followed by the class name.

The specified class must be defined in the RACF class descriptor table, and must be active for this request to be processed. In addition, if the class descriptor table specifies that RACLIST is required, the SETROPTS RACLIST option must be active for the class.

,DSTYPE=N
,DSTYPE=V
,DSTYPE=M
,DSTYPE=T

specifies the type of data set associated with the request:

N for non-VSAM

V for VSAM

M for model profile

T for tape.

DSTYPE=T should not be specified unless the SETROPTS TAPEDSN option is active (RCVTTDSN bit is on); otherwise, the processing is the same as for RACROUTE REQUEST=AUTH, CLASS='TAPEVOL'.

DSTYPE should be specified only for CLASS=DATASET.

,ENTITY=*resource name addr*
,ENTITY=(*resource name addr***)**
,ENTITY=(*resource name addr***,CSA)**

,ENTITY=(*resource name addr***,PRIVATE)**
,ENTITY=(*resource name addr***,NONE)**
,ENTITYX=*extended resource name addr*
,ENTITYX=(*extended resource name addr***)**
,ENTITYX=(*extended resource name addr***,CSA)**
,ENTITYX=(*extended resource name addr***,PRIVATE)**
,ENTITYX=(*extended resource name addr***,NONE)**
,PROFILE=*profile addr*

specifies the resource address.

Recommendation: Use ENTITYX rather than ENTITY. With ENTITY, the entity name you pass to RACF must be in a buffer, the size of which is determined by the length in the RACF class descriptor table. If the maximum length of a class descriptor entity increases in the future, you must modify your program to use a larger buffer. By using ENTITYX, you avoid this possible problem because you remove the class descriptor table dependency from your program.

For the ENTITY keyword, the resource name is a 44-byte DASD data set name for CLASS=DATASET, or a 6-byte volume serial number for CLASS=DASDVOL or CLASS=TAPEVOL. The length of all other resource names is determined from the class-descriptor tables.

- ENTITY=*resource name addr* or ENTITY=(*resource name addr*) specifies that RACF authorization checking is to be performed for the resource whose name is pointed to by the specified address. The name must be left-justified in the field and padded with blanks.
- ENTITY=(*resource name addr***,CSA**) specifies that RACF authorization checking is to be performed for the indicated resource and that a copy of the profile is to be maintained in central storage. The storage acquired for the profile is obtained from the common storage area (CSA), and is fetch-protected, key 0 storage.

  For ENTITY, CSA returns the address of the in-storage profile, with the name field replaced by the entity name specified.

  If CSA is specified and the return code from the RACROUTE REQUEST=AUTH macro instruction is 00 or 08 (that is, a profile exists), the address of the profile mapped by ICHRRPF is returned in register 1, as long as the return code is not a class descriptor table default return code for a resource profile. If a default return code is returned, register 1 does not contain the address of the profile. When a default return code of other than 4 is specified for a class in the class descriptor table, in addition to returning that specified return code, the reason code is incremented by X'200'. Note that, like CSA, when PRIVATE is specified, the profile is not returned along with a default return code.

  Programs must be APF-authorized, system key 0–7, or in supervisor state to specify CSA with the ENTITY keyword.

  Notes:

  1. If a common-area subpool (for example 226–228, 231, 239, 241, 245, 247, or 248) is used and not freed before the job terminates, then the job might show up in the exception reports of RMF (or other monitoring tools that support the tracking of common-area storage utilization) as owning common storage. Before your job terminates, it should issue a FREEMAIN to free this common storage.
  2. If a VOLSER is specified on the RACROUTE REQUEST=AUTH macro for the dataset class, it is built into the profile.

- ENTITY=(*resource name addr*,**PRIVATE**) PRIVATE specifies the same as CSA except that RACROUTE returns the profile in the user private area rather than in common storage, and the name field contains the name of the returned profile instead of the name of the resource that was specified on the ENTITY keyword. The issuer of RACROUTE REQUEST=AUTH must free this storage when the profile is no longer needed. (The profile subpool number and length are returned as well as the profile data.) For default reason codes, no profile is returned as for CSA.

  If the reason codes default, refer to "Class descriptor table default return codes and reason codes" on page 47 to identify them. If CSA or PRIVATE was specified on ENTITY or ENTITYX, register 1 does not point to a profile.

  Programs must be APF-authorized, system key 0–7, or in supervisor state to specify PRIVATE with the ENTITY keyword.

  Note: If a VOLSER is specified on the RACROUTE REQUEST=AUTH macro for the dataset class, it is built into the profile.
- ENTITY=(*resource name addr*,**NONE**) specifies the same as ENTITY=resource-name address. However, no profile is returned.
- ENTITYX=*extended resource address* ENTITYX=(*extended resource address*) specifies the address of a structure that consists of two 2-byte length fields, followed by the entity name.
  - The first 2-byte field specifies a buffer length, which can be from 0 to 255 bytes. This length field refers to the length of the buffer that contains the entity name; it does not include the length of either length field.
  - The second 2-byte field specifies the actual length of the entity name. This length field includes the length of the actual name without any trailing blanks; it does not include the length of either length field.

  These two length fields can be used in several different ways:
  - If you know the length of the entity name, you can specify 0 in the first field and the length of the entity name in the second field. When you specify the second field, note that each byte counts. This means the entity name that you specify must match exactly the entity name on the RACF database.
  - If you choose to place the entity name in a buffer area, specify the length of the buffer in the first field. For the second field, do one of the following:
    - If you know the length of the entity name, specify the length in the second field. The length of the first field can be from 0 to 255, but *must* be equal to or greater than the length of the second field.
    - If you do not know the length of the entity name, specify 0 in the second field, and RACF counts the number of characters in the entity name.

  To use this keyword, you must also specify RELEASE=1.9 or later.
- ENTITYX=(*extended resource name addr*,**CSA**) specifies that RACF authorization checking is to be performed for the indicated resource, and that a copy of the profile is to be maintained in main storage. The storage acquired for the profile is obtained from the common storage area (CSA), and is fetch-protected, key 0 storage.

  For ENTITYX, CSA returns the address of the in-storage profile, with the name field replaced by the entity name specified.

  If CSA is specified and the return code produced by the RACROUTE REQUEST=AUTH macro instruction is 00 or 08, the address of the profile

mapped by ICHRRPF is returned in register 1, as long as the return code is not a class descriptor table default return code for a resource profile. If a default return code is returned, register 1 does not contain the address of the profile. When a default return code of other than 4 is specified for a class in the class descriptor table, in addition to returning that specified return code, the reason code is incremented by X'200'. Note that, like CSA, when PRIVATE is specified, the profile is not returned along with a default return code.

Programs must be APF-authorized, system key 0–7, or in supervisor state to specify CSA with the ENTITYX keyword.

Note: When a common-area subpool (for example 226–228, 231, 239, 241, 245, 247, or 248) is used and not freed before the job terminates, then the job might show up in the exception reports of RMF (or other monitoring tools that support the tracking of common-area storage utilization) as owning common storage. Before your job terminates, it should issue a FREEMAIN to free this common storage.

To use this keyword, you must also specify RELEASE=1.9 or a later release number.

- ENTITYX=(*extended resource name addr*,**PRIVATE**) PRIVATE specifies the same as CSA, except that RACROUTE returns the profile in the user private area rather than in common storage, and the name field contains the name of the returned profile instead of the name of the resource that was specified on the ENTITY keyword. For default reason codes, no profile is returned as for CSA.

  If the reason codes default, refer to “Class descriptor table default return codes and reason codes” on page 47 to identify them. If CSA or PRIVATE was specified on ENTITY or ENTITYX, then register 1 does not point to a profile.

  The issuer of RACROUTE REQUEST=AUTH must free this storage when the profile is no longer needed. (The profile subpool number and length are part of the profile data returned.)

  To use this keyword, you must also specify RELEASE=1.9 or a later release number.

  Programs must be APF-authorized, system key 0–7, or in supervisor state to specify PRIVATE with the ENTITYX keyword.
- ENTITYX=(*extended resource name addr*,**NONE**) specifies the same as ENTITYX=resource name address. However, no profile is returned.

  To use this keyword, you must also specify RELEASE=1.9 or a later release number.
- PROFILE=*profile addr* specifies that RACF authorization checking is to be performed for the resource whose profile is pointed to by the specified address. This profile must be supplied by a previously executed RACROUTE REQUEST=AUTH with CSA or PRIVATE specified. A profile supplied by RACROUTE REQUEST=LIST is not acceptable.

  To specify PROFILE, programs must be APF-authorized and in supervisor state. The programs must also be in system key 0 or in the same key as the storage of the profile.

,FILESEQ=*number*
,FILESEQ=*reg*
specifies the file-sequence number of a tape data set on a tape volume or

within a tape-volume set. The value must be in the range 1–9999. If a register is specified, it must contain the file-sequence number in the low-order halfword.

If CLASS=DATASET and DSTYPE=T are not specified, FILESEQ is ignored.

,GENERIC=YES
,GENERIC=ASIS
specifies whether the resource name is to be treated as a generic profile name. GENERIC is ignored if the GENCMD option on the RACF SETROPTS command is not specified for the class (see *z/OS Security Server RACF Command Language Reference*).

This keyword is designed primarily for use by RACF commands.

YES The resource name is considered a generic profile name, even if it does not contain a generic character: an asterisk (*), a percent sign (%), or, for general-resource classes, an ampersand sign (&).

ASIS The resource name is considered generic if it contains a generic character: an asterisk (*), a percent sign (%), or, for general-resource classes, an ampersand sign (&).

,GROUPID=*'groupid'*
,GROUPID=*groupid address*
specifies the group name that RACF uses to perform third-party authorization checking. This is an 8-character field, left-justified, and padded to the right with blanks.

If the calling program wants a third-party authorization check performed on the group name rather than the user ID, the USERID keyword must be specified as *NONE*. That is, when the caller invokes third-party authorization checking, RACF verifies the authority of the group name to the requested resource; RACF disregards the group name associated with the ACEE of the caller.

Programs must be APF-authorized, system key 0–7, or in supervisor state to use the GROUPID keyword.

,INSTLN=*parm list addr*
specifies the address of an area that is to contain parameter information meaningful to the RACROUTE REQUEST=AUTH installation exit routine. This information is passed to the installation exit routine when it is given control by RACROUTE REQUEST=AUTH.

The INSTLN parameter can be used by an application program acting as a resource manager that needs to pass information to the RACROUTE REQUEST=AUTH installation exit routine.

,LOG=ASIS
,LOG=NOFAIL
,LOG=NONE
,LOG=NOSTAT
specifies the types of access attempts to be recorded on the SMF data set.

ASIS RACF records the event in the manner specified in the profile that protects the resource, or by other methods such as a SETROPTS option.

NOFAIL
If the authorization check fails, the attempt is not recorded. If the authorization check succeeds, the attempt is recorded as in ASIS.

Note: When SETROPTS PROTECTALL(WARNING) is in effect, the attempt is recorded as for ASIS.

NONE The attempt is not recorded.

LOG=NONE suppresses both messages and SMF records regardless of MSGSUPP=NO.

NOSTAT
The attempt is not recorded. No logging occurs and no resource statistics (including messages and SMF records) are updated.

Programs must be APF-authorized, system key 0–7, or in supervisor state to use the NOFAIL, NONE, and NOSTAT keywords.

,LOGSTR=*logstr addr*
specifies a variable-length data string consisting of a 1-byte, binary length field followed by character data that is to be included in the RACF SMF process records. The character data can be 0–255 bytes long. The RACF report writer includes LOGSTR data on the process reports.

To use this keyword, you must also specify RELEASE=1.9 or a later release number.

,OLDVOL=*old vol addr*
specifies a volume serial number:

- For CLASS=DATASET, within the same multivolume data set specified by VOLSER=
- For CLASS=TAPEVOL, within the same tape volume specified by ENTITY=.

RACF authorization checking verifies that the OLDVOL specified is part of the same multivolume data set or tape-volume set. RACF authorization checking does not look at global access table entries when the OLDVOL parameter is specified.

The specified address points to the field that contains the volume serial number padded to the right with blanks, if necessary, to make 6 characters.

,RACFIND=YES
,RACFIND=NO
indicates whether the resource is meant to be protected by a discrete profile. The RACF processing and the possible return codes are given in Table 3.

Note: In all cases, a return code of X'0C' is also possible if the OLDVOL specified was not part of the multivolume data set defined by VOLSER, or if it was not part of the same tape volume defined by ENTITY.

Table 3. Types of Profile Checking Performed by RACROUTE REQUEST=AUTH

Operand	Generic Profile Checking Inactive	Generic Profile Checking Active
RACFIND=YES	Look for discrete profile; if found, exit with return code 00 or 08. If no discrete profile is found, exit with return code 08.	Look for discrete profile; if found, exit with return code 00 or 08. Look for generic profile; if found, exit with return code 00 or 08. Exit with return code 08 if neither a discrete nor a generic profile is found.

Table 3. Types of Profile Checking Performed by RACROUTE REQUEST=AUTH (continued)

Operand	Generic Profile Checking Inactive	Generic Profile Checking Active
RACFIND=NO	No checking. Exit with return code 04. (See note).	Look for generic profile; if found, exit with return code 00 or 08. If not found, exit with return code 04. (See note).
RACFIND not specified	Look for discrete profile; if found, exit with return code 00 or 08. If no discrete profile is found, exit with return code 04. (See note).	Look for discrete profile; if found, exit with return code 00 or 08. Look for generic profile; if found, exit with return code 00 or 08. Exit with return code 04 if neither a discrete nor a generic profile is found. (See note).
Note: If PROTECTALL is active, no profile is found, and the user ID whose authority was checked does not have the SPECIAL attribute, RACF returns a return code X'08' instead of a return code X'04' and denies access.		

,RECVR=*recvr addr*

specifies the address of the user ID that has the authority to access the resource regardless of whether there is a resource profile to protect it. The field is 8 bytes, left-justified and padded to the right with blanks.

The RTOKEN= keyword is required when the RECVR= keyword is specified.

To use this keyword, you must also specify RELEASE=1.9 or a later release number.

,RTOKEN=*rtoken addr*

specifies the address of the RTOKEN of a unit of work. See the explanation of UTOKEN for format.

To use this keyword, you must also specify RELEASE=1.9 or later.

,STATUS=NONE
,STATUS=ERASE
,STATUS=EVERDOM
,STATUS=WRITEONLY
,STATUS=ACCESS

specifies the type of status required.

NONE No STATUS= functions have been requested.

ERASE RACROUTE REQUEST=AUTH is to return the ERASE status of the data set specified on the ENTITY or ENTITYX keyword. The ERASE status is returned as the RACF reason code. A reason code of 4 indicates the data set will be erased when scratched, and a reason code of 0 indicates it will not. The user of this operand should be aware that the SETROPTS ERASE setting, in conjunction with the ERASE setting in the profile protecting the data set, determines the ERASE status. This parameter is valid for CLASS=DATASET and a DSTYPE value other than T.

EVERDOM Security-label authorization checking includes a check to see whether the user has a security label, other than that of this job or logon session, that could *ever* dominate that of the current object. This is done primarily so that message security can

determine what to do with the messages that cannot currently be shown to the user. For example, if the user does not have a security label that can ever dominate that of the message, the message can be deleted. There are no restrictions on the CLASS parameter. Be aware that choosing this option increases processing time. The default is that security-label authorization checking occurs with the security label of the current job or logon session.

WRITEONLY The request is for output only in a class that also allows read or write functions. No reading is to be done.

ACCESS The request is simply to return the user's highest current access to the resource specified. Upon successful completion, the user's access is returned in the RACF reason code. No auditing is done for this request.

Notes:

1. If the ATTR= keyword is specified along with STATUS=ACCESS, the ATTR= keyword is ignored.
2. To use the STATUS=ACCESS keyword, you must specify RELEASE=1.9 or later.

,SYSTEM=NO
,SYSTEM=YES

specifies whether the caller is in system key 0–7 or supervisor state, or both.

NO indicates that the caller cannot guarantee to be in supervisor state or system key 0–7. When SYSTEM=NO is specified, normal REQUEST=AUTH processing occurs.

YES indicates that the caller is in system key 0–7 or supervisor state, or both. If the caller is *not* in system key 0–7 or supervisor state, an abend might occur. Specifying SYSTEM=YES when the caller is in system key 0–7 or supervisor state might allow more efficient processing of this request. Currently, SYSTEM=YES has no effect on RACF's processing of RACROUTE REQUEST=AUTH.

Note: To use the SYSTEM= keyword you must specify RELEASE=1.9.2 or later.

The default is SYSTEM=NO.

,TAPELBL=STD
,TAPELBL=BLP
,TAPELBL=NL

specifies the type of tape-label processing to be done:

STD IBM or ANSI standard labels

BLP Bypass label processing

NL Non-labeled tapes.

For TAPELBL=BLP, the user must have the requested authority to the profile ICHBLP in the general-resource class FACILITY. For more information about using the ICHBLP profile, see *z/OS Security Server RACF Security Administrator's Guide*.

For TAPELBL=NL or BLP, data management routines do not allow the user to protect volumes with volume serial number in the format "*Lnnnnn*."

This parameter is primarily intended for use by data-management routines to indicate the label type from the LABEL keyword on the JCL statement.

This parameter is valid for CLASS=DATASET and DSTYPE=T, or CLASS=TAPEVOL.

,USERID=*'userid'*
,USERID=*userid address*
specifies the user ID that RACF uses to perform third-party authorization checking. This is an 8-character field that is left-justified and padded to the right with blanks.

If USERID is specified when the caller invokes RACROUTE REQUEST=AUTH, RACF verifies that user's authority to the given entity; RACF disregards the user ID associated with the ACEE of the caller.

Notes:

1. If the calling program does not specify the GROUPID keyword, the internal RACROUTE REQUEST=VERIFY function uses the default group associated with the specified user ID.
2. Specifying USERID=BLANKS (where BLANKS is eight characters of X'40''s), with GROUPID not specified or specified as GROUPID=BLANKS, causes RACF to build an ACEE with an asterisk (*) specified as the user ID or group name. This is the same as an ACEE built by RACROUTE REQUEST=VERIFY without specifying USERID, GROUPID, or PASSWORD.
3. An ACEE with a user ID of asterisk (*) is built by RACF only for the case listed in Note 2, and it cannot be specified. For example, consider USERID=VAR1, where variable VAR1 is the asterisk character (*) followed by 7 blanks. This results in a 282-48 abend that regards the asterisk (*) as in invalid RACF user ID.

Programs must be APF-authorized, system key 0–7, or in supervisor state to use the USERID keyword.

,UTOKEN=*token addr*
specifies the address of the UTOKEN of the user for whom RACF performs third-party authorization checking. The first byte contains the length of the UTOKEN, and the second byte contains the version number.

If UTOKEN is specified when the caller invokes RACROUTE REQUEST=AUTH, RACF verifies that user's authority to the given entity; RACF disregards the user ID associated with the ACEE of the caller. Furthermore, if this parameter is specified, it takes precedence over the USERID and GROUPID parameters (if specified).

To use this keyword, you must also specify RELEASE=1.9 or a later release number.

The ACEE= does not perform a third-party check. Only UTOKEN, USERID, and GROUPID do this.

Programs must be APF-authorized, system key 0–7, or in supervisor state to use the UTOKEN parameter.

,VOLSER=*vol addr*
specifies the volume serial number, as follows:

- For non-VSAM DASD data sets and tape data sets, this is the volume serial number of the volume on which the data set resides.
- For VSAM DASD data sets, this is the volume serial number of the catalog controlling the data set.

The volume serial number is optional if DSTYPE=M is specified; it is ignored if the profile name is generic.

The field pointed to by the specified address contains the volume serial number, padded to the right with blanks if necessary to make six characters. VOLSER= is only valid (and must be supplied) with CLASS=DATASET, (unless DSTYPE=M is specified) when ENTITY or ENTITYX is also coded.

,MF=S
specifies the standard form of the RACROUTE REQUEST=AUTH macro instruction.

Return codes and reason codes

When you execute the macro, space for the RACF return code and reason code is reserved in the first two words of the RACROUTE parameter list. You can access them using the ICHSAFP mapping macro by loading the ICHSAFP pointer with the label that you specified on the list form of the macro. When control is returned, register 15 contains the SAF return code.

Note to Reader
All return and reason codes are shown in hexadecimal. Also, please note that SAF return code is presented as SAF RC and RACF return code is presented as RACF RC in the following section.

SAF RC	Meaning
00	RACROUTE REQUEST=AUTH completed successfully.

RACF RC	Meaning
00	The user is authorized by RACF to obtain use of a RACF-protected resource.

Reason Code	Meaning
00	Indicates a normal completion.
04	Indicates one of the following: • STATUS=ERASE was specified and the data set is to be erased when scratched, or • the warning status of the resource was requested by the RACROUTE REQUEST=AUTH issuer's setting bit X'10' at offset 12 decimal in the request-specific portion of the RACROUTE REQUEST=AUTH parameter list with the resource in warning mode. The request-specific portion of the RACROUTE REQUEST=AUTH

parameter list follows the RACROUTE parameter list (ICHSAFP) and is mapped by mapping macro, ICHACHKL.

10 When CLASS=TAPEVOL, indicates the TAPEVOL profile contains a TVTOC.

20 When CLASS=TAPEVOL, indicates that the TAPEVOL profile can contain a TVTOC, but currently does not (for a scratch pool volume).

24 When CLASS=TAPEVOL, indicates that the TAPEVOL profile does not contain a TVTOC.

14 Requested function with STATUS=ACCESS specified has completed successfully. The user's highest access to the specified resource is indicated by one of the following reason codes:

Reason Code	Meaning
00	The user has no access.
04	The user has READ authority.
08	The user has UPDATE authority.
0C	The user has CONTROL authority.
10	The user has ALTER authority.

04 Requested function could not be completed. No RACF decision.

RACF RC	Meaning
00	No security decision could be made.

Reason Code	Meaning
00	One of the following has occurred: • RACF is not installed. • Specified requester, subsystem, or class is not in the RACF router table. • Specified class is not in the RACF class descriptor table.

04 The specified resource is not protected by RACF.

Note: If PROTECTALL is active, no profile is found, and the user ID whose authority was checked does not have the SPECIAL attribute, RACF returns a return code X'08' instead of a return code X'04' and denies access.

Reason Code	Meaning
00	One of the following has occurred:

- There is no RACF profile protecting the resource.
- RACF is not active.
- Specified class is not active.
- Specified class requires SETROPTS RACLIST option to be active and it is not.
- CLASS TEMPDSN was active and the dataset is a temporary dataset.
- A userid of *BYPASS* has been passed on the auth check. No profile checking will occur.

04 Indicates STATUS=ERASE was specified and the data set is to be erased when scratched.

582 Reserved.

08 Requested function has failed.

RACF RC	Meaning
08	The user is *not* authorized by RACF to obtain use of the specified RACF-protected resource.

Reason Code	Meaning
00	Indicates a normal completion. A possible cause would be PROTECTALL is active, no profile is found, and the user ID whose authority was checked does not have the SPECIAL attribute.
04	Indicates STATUS=ERASE was specified and the data set is to be erased when scratched.
08	Indicates DSTYPE=T or CLASS=TAPEVOL was specified and the user is not authorized to use the specified volume.
0C	For tape data set processing, the user is not authorized to use the data set.
10	Indicates DSTYPE=T or CLASS=TAPEVOL was specified and the user is not authorized to specify TAPELBL=(,BLP).
14	Indicates the user is not authorized to open a non-cataloged data set.
18	Indicates the user is not authorized to issue RACROUTE REQUEST=AUTH when system is in tranquil state (MLQUIET).

1C	A user with EXECUTE authority to the data set profile specified ATTR=READ, and RACF failed the access attempt.
20	The user's security label does not dominate that of the resource; it fails SECLABEL authorization checking.
24	The user's security label can never dominate that of the resource.
28	The resource must have a security label, but does not have one.
2C	Conditional access could not be granted because the environment is not controlled.

0C The OLDVOL specified was not part of the multivolume data set defined by VOLSER, or it was not part of the same tape volume defined by ENTITY.

10 RACROUTE REQUEST=VERIFY was issued by a third party, and RACROUTE REQUEST=AUTH failed.

Reason Code	Meaning
XX	This value is the RACF return code from the RACROUTE REQUEST=VERIFY. Refer to "Return codes and reason codes" on page 231 for an explanation of these reason codes. Under SAF return code X'08', see RACF return code *XX*.

64 Indicates that the CHECK subparameter of the RELEASE keyword was specified on the execute form of the RACROUTE REQUEST=AUTH macro; however, the list form of the macro does not have the same RELEASE parameter. Macro processing terminates.

Class descriptor table default return codes and reason codes

Normally, if a resource profile is not found, the function returns a return code of 4. However, if a resource profile is not found but a default return-code keyword is specified in the class descriptor table for the class specified on the RACROUTE REQUEST=AUTH, the function returns that specified return code.

When a default return code of other than 4 is specified for a class in the class descriptor table, that specified return code is returned and the reason code is incremented by hexadecimal 200.

Whenever RACROUTE REQUEST=AUTH returns a default return code, register 1 does not point to a profile, even if CSA or PRIVATE was specified with ENTITY or ENTITYX.

Example 1

Operation: Perform RACF authorization checking, using the standard form, for a non-VSAM data set residing on the volume pointed to by register 8. Register 7 points to the data set name and the RACF user is requesting the highest level of

control over the data set. The “RACF-indicated” bit in the data set’s DSCB is on. Logging and statistics updates are **not** to be done.

```
RACROUTE REQUEST=AUTH,ENTITY=((R7)),VOLSER=(R8),      X
         CLASS='DATASET',WORKA=RACWK,                 X
         ATTR=ALTER,RACFIND=YES,LOG=NOSTAT
  :
  :
RACWK     DS  CL512
```

Example 2

Operation: Perform RACF authorization checking, using the standard form, for a VSAM data set residing on the volume pointed to by register 8. Register 7 points to the data set name, and the RACF user is requesting the data set for read only. Register 4 points to an area containing additional parameter information.

```
RACROUTE REQUEST=AUTH,ENTITY=((R7)),VOLSER=(R8),      X
         CLASS='DATASET',WORKA=RACWK,                 X
         DSTYPE=V,INSTLN=(R4)
    :
    :
RACWK    DS   CL512
```

Example 3

Operation: Perform RACF authorization checking, using the standard form, for a tape volume for READ access only. The tape volume is pointed to by register 8 and the volume’s access level is in register 5.

```
RACROUTE REQUEST=AUTH,ENTITY=((R8)),CLASS='TAPEVOL',  X
         ATTR=READ,WORKA=RACWK,                       X
         ACCLVL=((R5))
    :
    :
RACWK    DS   CL512
```

Example 4

Operation: Perform third-party RACF authorization checking, using the standard form, to provide READ access for a user to a data set residing on the volume pointed to by register 8. Register 7 points to the data set name, and A is an 8-byte declared field padded with blanks.

```
RACROUTE REQUEST=AUTH,ENTITY=((R7)),WORKA=RACWK,           X
         VOLSER=(R8),CLASS='DATASET',ATTR=READ,            X
         USERID=A
    :
    :
RACWK    DS   CL512
```

Example 5

Operation: Perform third-party RACF authorization checking, using the standard form, for a data set for READ access only for a group. Register 8 points to the volume on which the data set resides; register 7 points to the data set name.

```
RACROUTE REQUEST=AUTH,ENTITY=((R7)),VOLSER=(R8),      X
         CLASS='DATASET',ATTR=READ,WORKA=RACWK,       X
         USERID='*NONE*',GROUPID='AGROUPID'
   :
   :
RACWK    DS   CL512
```

Example 6

Operation: Perform third-party RACF authorization checking, using the standard form, for a data set for a user connected to a group. Register 8 points to the volume on which the data set resides; register 7 points to the data set name.

```
RACROUTE REQUEST=AUTH,ENTITY=((R7)),WORKA=RACWK,      X
         VOLSER=(R8),CLASS='DATASET',ATTR=READ,       X
         USERID='SOMEUSER',GROUPID='AGROUPID'
     :
     :
RACWK    DS   CL512
```

Example 7

Operation: Perform third-party RACF authorization checking, using the standard form, for a data set residing on the volume pointed to by register 8, to allow READ access only for a user. Register 7 points to the data set name, and A is an 8-byte declared field padded with blanks.

```
RACROUTE REQUEST=AUTH,ENTITY=((R7)),WORKA=RACWK,      X
         VOLSER=(R8),CLASS='DATASET',ATTR=READ,       X
         USERID=A
    :
    :
RACWK    DS   CL512
```

RACROUTE REQUEST=AUTH (list form)

The list form of the RACROUTE REQUEST=AUTH macro is written as follows. Refer to the Standard Form of the RACROUTE REQUEST=AUTH macro to determine additional parameters that are required by the time the RACROUTE service is invoked using the Execute form of the macro.

name	*name*: Symbol. Begin *name* in column 1.
ƀ	One or more blanks must precede RACROUTE.
RACROUTE	
ƀ	One or more blanks must follow RACROUTE.
REQUEST=AUTH	
,ACCLVL=*access level addr*	*access level addr*: A-type address
,ACEE=*acee addr*	*acee addr*: A-type address
,APPL=*'applname'* ,APPL=*applname addr*	*applname*: 1–8 character name *applname addr*: A-type address
,ATTR=READ ,ATTR=UPDATE	**Default:** ATTR=READ

,ATTR=CONTROL ,ATTR=ALTER	
,CLASS=*'class name'* ,CLASS=*class name addr*	*class name*: 1–8 character name *class name addr*: A-type address
,DSTYPE=N ,DSTYPE=V ,DSTYPE=M ,DSTYPE=T	**Default:** DSTYPE=N
,ENTITY=*resource name addr*	*resource name addr*: A-type address only
,ENTITY=(*resource name addr*) ,ENTITY=(*resource name addr*,CSA) ,ENTITY=(*resource name addr*,PRIVATE) ,ENTITY=(*resource name addr*,NONE)	*resource name addr*: A-type address or register (2) - (12)
,ENTITYX=*extended resource name addr*	*extended resource name addr*: A-type address only
,ENTITYX=(*extended resource name addr*) ,ENTITYX=(*extended resource name addr* ,CSA) ,ENTITYX=(*extended resource name addr* ,PRIVATE) ,ENTITYX=(*extended resource name addr* ,NONE)	*extended resource name addr*: A-type address or register (2) - (12)
,FILESEQ=*number*	*number*: 1–9999
,GENERIC=YES ,GENERIC=ASIS	**Default:** GENERIC=ASIS
,GROUPID=*'groupid'* ,GROUPID=*groupname addr*	*groupid*: 1–8 character group ID *groupname addr*: A-type address or register (2) - (12)
,INSTLN=*parm list addr*	*parm list addr*: A-type address
,LOG=ASIS ,LOG=NOFAIL ,LOG=NONE ,LOG=NOSTAT	**Default:** LOG=ASIS

,LOGSTR=*logstr addr*	*logstr addr*: A-type address
,OLDVOL=*old vol addr*	*old vol addr*: A-type address
,PROFILE=*profile addr*	*profile addr*: A-type address **Note:** PROFILE, ENTITY, or ENTITYX is required on either the list, execute, or modify form of the macro.
,RACFIND=YES ,RACFIND=NO	
,RECVR=*recvr addr*	*recvr addr*: A-type address
,RTOKEN=*rtoken addr*	*rtoken addr*: A-type address
,STATUS=NONE ,STATUS=ERASE ,STATUS=EVERDOM ,STATUS=WRITEONLY ,STATUS=ACCESS	**Default:** STATUS=NONE
,SYSTEM=NO ,SYSTEM=YES	**Default:** SYSTEM=NO **Note:** Use of the SYSTEM= keyword requires that RELEASE=1.9.2 be specified.
,TAPELBL=STD ,TAPELBL=BLP ,TAPELBL=NL	**Default:** TAPELBL=STD
,USERID=*'userid'* ,USERID=*userid addr*	*userid*: 1–8 character user ID *userid addr*: A-type address
,UTOKEN=*token addr*	*token addr*: A-type address
,VOLSER=*vol addr*	*vol addr*: A-type address **Note:** VOLSER is required on either the list or the execute form of the macro for CLASS=DATASET and DSTYPE not equal to M when a discrete profile name is used.

,MF=L

When SYSTEM=YES is specified, only the following keywords are valid:

,CLASS=*'class name'*	*class name*: 1–8 character name
,CLASS=*class name addr*	*class name addr*: A-type address or register (2) - (12)
,ENTITY=*resource name addr*	*resource name addr*: A-type address only
,ENTITY=(*resource name addr*)	*resource name addr*: A-type address or register (2) - (12)
,ATTR=READ ,ATTR=UPDATE ,ATTR=CONTROL	**Default:** ATTR=READ

,ATTR=ALTER	
,APPL=*'applname'*	*applname*: 1–8 character name
,APPL=*applname addr*	*applname addr*: A-type address or register (2) - (12)
,INSTLN=*parm list addr*	*parm list addr*: A-type address or register (2) - (12)
,LOG=ASIS	**Default:** LOG=ASIS
,LOG=NOFAIL	
,LOG=NONE	
,LOG=NOSTAT	

The parameters are explained under the standard form of the RACROUTE REQUEST=AUTH macro with the following exception:

,MF=L
specifies the list form of the RACROUTE REQUEST=AUTH macro instruction.

RACROUTE REQUEST=AUTH (execute form)

The execute form of the RACROUTE REQUEST=AUTH macro is written as follows. Refer to the Standard Form of the RACROUTE REQUEST=AUTH macro to determine additional parameters that are required by the time the RACROUTE service is invoked using the Execute form of the macro.

name	*name*: Symbol. Begin *name* in column 1.
b	One or more blanks must precede RACROUTE.
RACROUTE	
b	One or more blanks must follow RACROUTE.
REQUEST=AUTH	
,ACCLVL=*access level addr*	*access level addr*: Rx-type address or register (2) - (12)
,ACEE=*acee addr*	*acee addr*: Rx-type address or register (2) - (12)
,APPL=*applname addr*	*applname addr*: Rx-type address or register (2) - (12)
,ATTR=READ	
,ATTR=UPDATE	
,ATTR=CONTROL	

,ATTR=ALTER	
,ATTR=*reg*	*reg*: Register (2) - (12)
,CLASS=*class name addr*	*class name addr*: Rx-type address or register (2) - (12)
,DSTYPE=N	
,DSTYPE=V	
,DSTYPE=M	
,DSTYPE=T	
,ENTITY=*resource name addr*	*resource name addr*: Rx-type address only
,ENTITY=(*resource name addr*)	*resource name addr*: Rx-type address or register (2) - (12)
,ENTITY=(*resource name addr*,CSA)	
,ENTITY=(*resource name addr*,PRIVATE)	
,ENTITY=(*resource name addr*,NONE)	
,ENTITYX=*extended resource name addr*	*extended resource name addr*: Rx-type address only
,ENTITYX=(*extended resource name addr*)	*extended resource name addr*: Rx-type address or register (2) - (12)
,ENTITYX=(*extended resource name addr* ,CSA)	
,ENTITYX=(*extended resource name addr* ,PRIVATE)	
,ENTITYX=(*extended resource name addr*) ,NONE)	
,FILESEQ=*number*	*number*: 1–9999
,FILESEQ=*reg*	*reg*: Register (2) - (12)
,GENERIC=YES	
,GENERIC=ASIS	
,GROUPID=*groupname addr*	*groupname addr*: Rx-type address or register (2) - (12)
,INSTLN=*parm list addr*	*parm list addr*: Rx-type address or register (2) - (12)
,LOG=ASIS	
,LOG=NOFAIL	
,LOG=NONE	
,LOG=NOSTAT	

,LOGSTR=*logstr addr*	*logstr addr*: Rx-type address or register (2) - (12)
,OLDVOL=*old vol addr*	*old vol addr*: Rx-type address or register (2) - (12)
,PROFILE=*profile addr*	*profile addr*: Rx-type address or register (2) - (12) **Note:** PROFILE, ENTITY, or ENTITYX required on either the list, execute, or modify form of the macro.
,RACFIND=YES ,RACFIND=NO	
,RECVR=*recvr addr*	*recvr addr*: Rx-type address or register (2) - (12)
,RELEASE=*number* ,RELEASE=(,CHECK) ,RELEASE=(*number* ,CHECK)	*number*: See Standard Form **Default:** RELEASE=1.6
,RTOKEN=*rtoken addr*	*rtoken addr*: Rx-type address or register (2) - (12)
,STATUS=NONE ,STATUS=ERASE ,STATUS=EVERDOM ,STATUS=WRITEONLY ,STATUS=ACCESS	
,SYSTEM=NO ,SYSTEM=YES	**Default:** SYSTEM=NO **Note:** Use of the SYSTEM= keyword requires that RELEASE=1.9.2 be specified.
,TAPELBL=STD ,TAPELBL=BLP ,TAPELBL=NL	
,USERID=*userid addr*	*userid addr*: Rx-type address or register (2) - (12)
,UTOKEN=*token addr*	*token addr*: Rx-type address or register (2) - (12)
,VOLSER=*vol addr*	*vol addr*: Rx-type address or register (2) - (12) **Note:** VOLSER is required on either the list or the execute form of the macro for CLASS=DATASET and DSTYPE not equal to M when a discrete profile name is used.
,MF=(E,*ctrl addr*)	*ctrl addr*: Rx-type address, or register (1) or (2) - (12)

When SYSTEM=YES is specified, only the following keywords are valid:

,CLASS=*class name addr*	*class name addr*: A-type address or register (2) - (12)

,ENTITY=*resource name addr*	*resource name addr*: A-type address only
,ENTITY=(*resource name addr*)	*resource name addr*: A-type address or register (2) - (12)
,ATTR=READ	
,ATTR=UPDATE	
,ATTR=CONTROL	
,ATTR=ALTER	
,ATTR=*reg*	*reg*: register (2) - (12)
,APPL=*applname addr*	*applname addr*: A-type address or register (2) - (12)
,INSTLN=*parm list addr*	*parm list addr*: A-type address or register (2) - (12)
,LOG=ASIS	
,LOG=NOFAIL	
,LOG=NONE	
,LOG=NOSTAT	

The parameters are explained under the standard form of the RACROUTE REQUEST=AUTH macro with the following exceptions:

,RELEASE=*number*
,RELEASE=(,CHECK)
,RELEASE=(*number***,CHECK)**

specifies the RACF release level of the parameter list to be generated by this macro.

To use the parameters associated with a release, you must specify the release number of that release or a later release number. If you specify an earlier release level, the parameter is not accepted by macro processing, and an error message is issued at assembly time.

When you specify the RELEASE keyword, checking is done at assembly time. Compatibility between the list and execute forms of the RACROUTE REQUEST=AUTH macro is verified at execution time if you specify the CHECK subparameter on the execute form of the macro.

The size of the list form expansion must be large enough to accommodate all parameters defined by the RELEASE keyword on the execute form of the macro. Otherwise, when CHECK processing is requested, the execute form of the macro is not done, and a return code of X'64' is returned.

The default is RELEASE=1.6.

,MF=(E,*ctrl addr***)**

specifies the execute form of the RACROUTE REQUEST=AUTH macro instruction.

RACROUTE REQUEST=AUTH (modify form)

The modify form of the RACROUTE REQUEST=AUTH macro is written as follows. Refer to the Standard Form of the RACROUTE REQUEST=AUTH macro to determine additional parameters that are required by the time the RACROUTE service is invoked using the Execute form of the macro.

name	*name*: Symbol. Begin *name* in column 1.
b	One or more blanks must precede RACROUTE.
RACROUTE	
b	One or more blanks must follow RACROUTE.
REQUEST=AUTH	
,ACCLVL=*access level addr*	*access level addr*: Rx-type address or register (2) - (12)
,ACEE=*acee addr*	*acee addr*: Rx-type address or register (2) - (12)
,APPL=*applname addr*	*applname addr*: Rx-type address or register (2) - (12)
,ATTR=READ ,ATTR=UPDATE ,ATTR=CONTROL ,ATTR=ALTER ,ATTR=reg	 *reg*: Register (2) - (12)
,CLASS=*class name addr*	*class name addr*: Rx-type address or register (2) - (12)
,DSTYPE=N ,DSTYPE=V ,DSTYPE=M ,DSTYPE=T	
,ENTITY=*resource name addr*	*resource name addr*: Rx-type address only
,ENTITY=(*resource name addr*) ,ENTITY=(*resource name addr*,CSA) ,ENTITY=(*resource name addr*,PRIVATE) ,ENTITY=(*resource name addr*,NONE)	*resource name addr*: Rx-type address or register (2) - (12)
,ENTITYX=*extended*	*extended resource name addr*: Rx-type address only

resource name addr	
,ENTITYX=(*extended resource name addr*)	*extended resource name addr*: Rx-type address or register (2) - (12)
,ENTITYX=(*extended resource name addr* ,CSA)	
,ENTITYX=(*extended resource name addr* ,PRIVATE)	
,ENTITYX=(extended *resource name addr* ,NONE)	
,FILESEQ=*number*	*number*: 1–9999
,FILESEQ=*reg*	*reg*: Register (2) - (12)
,GENERIC=YES	
,GENERIC=ASIS	
,GROUPID=*groupname addr*	*groupname addr*: Rx-type address or register (2) - (12) *groupname addr*: Rx-type address or register (2) - (12)
,INSTLN=*parm list addr*	*parm list addr*: Rx-type address or register (2) - (12)
,LOG=ASIS	
,LOG=NOFAIL	
,LOG=NONE	
,LOG=NOSTAT	
,LOGSTR=*logstr addr*	*logstr addr*: Rx-type address or register (2) - (12)
,OLDVOL=*old vol addr*	*old vol addr*: Rx-type address or register (2) - (12)
,PROFILE=*profile addr*	*profile addr*: Rx-type address or register (2) - (12) **Note:** PROFILE, ENTITY, or ENTITYX is required on either the list, execute, or modify form of the macro.
,RACFIND=YES	
,RACFIND=NO	
,RECVR=*recvr addr*	*recvr addr*: Rx-type address or register (2) - (12)
,RTOKEN=*rtoken addr*	*rtoken addr*: Rx-type address or register (2) - (12)
,STATUS=NONE	
,STATUS=ERASE	
,STATUS=EVERDOM	
,STATUS=WRITEONLY	
,STATUS=ACCESS	
,SYSTEM=NO	**Default:** SYSTEM=NO
,SYSTEM=YES	**Note:** Use of the SYSTEM= keyword requires that RELEASE=1.9.2 be specified.

,TAPELBL=STD
,TAPELBL=BLP
,TAPELBL=NL

,USERID=*userid addr* — *userid addr*: Rx-type address or register (2) - (12)

,UTOKEN=*token addr* — *token addr*: Rx-type address or register (2) - (12)

,VOLSER=*vol addr* — *vol addr*: Rx-type address or register (2) - (12)
Note: VOLSER is required on either the list or the execute form of the macro for CLASS=DATASET and DSTYPE not equal to M when a discrete profile name is used.

,MF=(M,*ctrl addr*) — *ctrl addr*: Rx-type address, or register (1) or (2) - (12)

When SYSTEM=YES is specified, only the following keywords are valid:

,CLASS=*class name addr* — *class name addr*: A-type address or register (2) - (12)

,ENTITY=*resource name addr* — *resource name addr*: A-type address only
,ENTITY=(*resource name addr*) — *resource name addr*: A-type address or register (2) - (12)

,ATTR=READ
,ATTR=UPDATE
,ATTR=CONTROL
,ATTR=ALTER
,ATTR=*reg* — *reg*: register (2) - (12)

,APPL=*applname addr* — *applname addr*: A-type address or register (2) - (12)

,INSTLN=*parm list addr* — *parm list addr*: A-type address or register (2) - (12)

,LOG=ASIS
,LOG=NOFAIL
,LOG=NONE

The parameters are explained under the standard form of the RACROUTE REQUEST=AUTH macro with the following exceptions:

,MF=(M,*ctrl addr***)**
specifies the modify form of the RACROUTE REQUEST=AUTH macro instruction.

RACROUTE REQUEST=DEFINE: Define, modify, rename, or delete a resource for RACF

The RACROUTE REQUEST=DEFINE macro defines, modifies, renames, or deletes resource profiles for RACF. You can also use it for special cases of authorization checking. RACF uses the resulting profiles to perform authorization checking when a user requests access to a RACF-protected resource.

In general, you should use the RACF command processors to create RACF resource profiles, since only the command processors do complete validation of profile name syntax. If you use RACROUTE REQUEST=DEFINE instead, you should create profiles which are supported by the command processors. For instance, RACROUTE REQUEST=DEFINE allows you to create a fully qualified generic profile in a general resource class and a data set profile containing characters that are not valid, but those profiles are not supported by the RACF command processors.

The RACROUTE REQUEST=DEFINE preprocessing and postprocessing exit routines can change or add the RACROUTE REQUEST=DEFINE parameters OWNER, LEVEL, UACC, or AUDIT.

The RACROUTE REQUEST=DEFINE caller must be authorized (APF-authorized, in system key 0–7, or in supervisor state).

The caller cannot hold any locks when issuing RACROUTE REQUEST=DEFINE.

When activated, automatic direction of application updates propagates RACROUTE REQUEST=DEFINE updates to selected remote nodes.

Not all RACROUTE REQUEST=DEFINE requests update the RACF database. The ENVIR=VERIFY keyword specifies that no profile is to be created, but that the user's authority is to be checked. Automatic direction of application updates does not propagate a RACROUTE REQUEST=DEFINE if ENVIR=VERIFY is specified. Similarly, many RACROUTE REQUEST=DEFINE requests are issued with RACFIND=NO to check if a user is authorized to create a data set or catalog a data set based on a generic profile. RACROUTE REQUEST=DEFINE RACFIND=NO requests for DASD data sets are not propagated. RACROUTE REQUEST=DEFINE requests for tape data sets are propagated even when RACFIND=NO is specified because even though no data set profile is updated, an update might be made to the TVTOC in a TAPEVOL profile.

Only RACROUTE REQUEST=DEFINE requests with return code 0 are propagated.

RACROUTE REQUEST=DEFINE (standard form)

The standard form of the RACROUTE REQUEST=DEFINE macro is written as follows. For a description of additional keywords that you can code and additional parameters that are required on the RACROUTE request, but that are not specific to this request type, see "RACROUTE (standard form)" on page 13.

Note

RACROUTE REQUEST=DEFINE requires an ACEE. For most applications, the system will have created an ACEE to represent the active user. However, for special cases where no ACEE exists, the invoker must create one before invoking RACROUTE REQUEST=DEFINE.

The most common way to create an ACEE is to issue a RACROUTE REQUEST=VERIFY, specifying ENVIR=CREATE. After all RACROUTE invocations are complete, the invoker should issue RACROUTE REQUEST=VERIFY with ENVIR=DELETE specified, to delete the ACEE previously created.

Application programs must be structured so that a task requesting RACF services does not do so while other I/O initiated by the task is outstanding. If such I/O is required, the task should either wait for the other I/O to complete before requesting RACF services, or the other I/O should be initiated under a separate task. This is necessary to assure proper processing in recovery situations.

name	*name*: Symbol. Begin *name* in column 1.
b	One or more blanks must precede RACROUTE.
RACROUTE	
b	One or more blanks must follow RACROUTE.
REQUEST=DEFINE	
,ENTITY=*profile name addr* ,ENTITYX=*extended profile name addr*	*profile name addr*: A-type address or register (2) - (12) *extended profile name addr*: A-type address or register (2) - (12)
,VOLSER=*vol addr*	*vol addr*: A-type address or register (2) - (12) **Note:** VOLSER is required for CLASS=DATASET and DSTYPE not equal to M when a discrete profile name is used.
,ACCLVL=*access value addr*	*access value addr*: A-type address or register (2) - (12)
,ACCLVL=(*access value addr,parm list addr*)	*parm list addr*: A-type address or register (2) - (12)
,ACEE=*acee addr*	*acee addr*: A-type address or register (2) - (12)
,AUDIT=NONE ,AUDIT=*audit value* ,AUDIT=(*audit value(access level),*	**Note:** AUDIT is valid if TYPE=DEFINE is specified. *audit value*: ALL, SUCCESS, or FAILURES *access level*: READ, UPDATE, CONTROL, or ALTER

audit value (*access level*))	
	Default: AUDIT=READ
,AUDIT=*reg*	*reg*: register (2) - (12)
,CHKAUTH=YES	
,CHKAUTH=NO	**Default:** CHKAUTH=NO
,CLASS=*'class name'*	*class name*: 1–8 character name.
,CLASS=*class name addr*	*class name addr*: A-type address or register (2) - (12)
	Default: CLASS=DATASET
,DATA=*data addr*	*data addr*: A-type address or register (2) - (12)
,DSTYPE=N	**Default:** DSTYPE=N
,DSTYPE=V	
,DSTYPE=M	
,DSTYPE=T	
,ENVIR=VERIFY	Specifies that only verification is to be done. **Default:** Normal RACROUTE REQUEST=DEFINE processing
,ERASE=YES	
,ERASE=NO	**Default:** ERASE=NO
,EXPDT=*expir-date addr*	*expir-date addr*: A-type address or register (2) - (12)
,EXPDTX=*extended expir-date addr*	*extended expir-date addr*: A-type address or register (2) - (12)
,RETPD=*retn-period addr*	*retn-period addr*: A-type address or register (2) - (12)
	Default: See description of parameter.
,FILESEQ=*number*	*number*: 1–9999
,FILESEQ=*reg*	*reg*: Register (2) - (12)
,GENERIC=YES	
,GENERIC=ASIS	**Default:** GENERIC=ASIS
,INSTLN=*parm list addr*	*parm list addr*: A-type address or register (2) - (12)
,LEVEL=*number*	**Default:** LEVEL=zero
,LEVEL=*reg*	*reg*: Register (2) - (12)
,MCLASS=*'class name'*	*class name*: 1–8 character name
,MCLASS=*class name addr*	*class name addr*: A-type address or register (2) - (12)
	Default: MCLASS=DATASET
,MENTITY=*entity addr*	*entity addr*: A-type address or register (2) - (12)
,MENTX=*extended entity addr*	*extended entity addr*: A-type address or register (2) - (12)

,MGENER=ASIS ,MGENER=YES	**Default:** MGENER=ASIS
,MGMTCLA=*management type addr*	*management type addr*: A-type address or register (2) - (12)
,MVOLSER=*volser addr*	*volser addr*: A-type address or register (2) - (12)
,NOTIFY=*notify-id addr*	*notify-id addr*: A-type address or register (2) - (12)
,OWNER=*owner id addr*	*owner id addr*: A-type address or register (2) - (12)
,RACFIND=YES ,RACFIND=NO	
,RESOWN=*resource owner addr*	*resource owner addr*: A-type address or register (2) - (12)
,SECLABL=*addr*	*addr*: A-type address or register (2) - (12)
,SECLVL=*addr*	*addr*: A-type address or register (2) - (12)
,STORCLA=*storage class addr*	*storage class addr*: A-type address or register (2) - (12)
,TAPELBL=STD ,TAPELBL=BLP ,TAPELBL=NL	**Default:** TAPELBL=STD
,TYPE=DEFINE ,TYPE=DEFINE, NEWNAME=*new resource name addr*	**Default:** TYPE=DEFINE *new resource name addr*: A-type address or register (2) - (12)
,TYPE=DEFINE, NEWNAMX=*extended new resource name addr*	*extended new resource name addr*: A-type address or register (2) - (12)
,TYPE=ADDVOL, OLDVOL=*old vol addr*	*old vol addr*: A-type address or register (2) - (12)
,TYPE=CHGVOL, OLDVOL=*old vol addr*	*old vol addr*: A-type address or register (2) - (12)
,TYPE=DELETE	
,UACC=ALTER ,UACC=CONTROL ,UACC=UPDATE ,UACC=READ	

,UACC=EXECUTE	
,UACC=NONE	
,UACC=*reg*	*reg*: Register (2) - (12)
,UNIT=*unit addr*	*unit addr*: A-type address or register (2) - (12)
,WARNING=YES	
,WARNING=NO	**Default:** WARNING=NO **Note:** WARNING is valid if TYPE=DEFINE is specified.
,MF=S	

The parameters are explained as follows:

,ENTITY=*profile name addr*
,ENTITYX=*extended profile name addr*
specifies the address:

- ENTITY=*profile name addr* specifies the address of the name of the discrete or generic profile that is to be defined to, modified, or deleted from RACF. The profile name is a 44-byte DASD data set name for CLASS=DATASET, or a 6-byte volume serial name for CLASS=DASDVOL or CLASS=TAPEVOL. The lengths of all other profile names are determined by the class-descriptor table. The name must be left-justified in the field and padded with blanks.
- ENTITYX=*extended profile name addr* specifies the address of a structure that consists of two 2-byte length fields, followed by the entity name.
  - The first 2-byte field specifies a buffer length which can be from 0 to 255 bytes. This length field refers to the length of the buffer that contains the entity name; it does not include the length of either length field.
  - The second 2-byte field specifies the actual length of the entity name. This length field includes the length of the actual name without any trailing blanks; it does not include the length of either length field.

  These two length fields can be used in several different ways:
  - If you know the length of the entity name, you can specify 0 in the first field and the length of the entity name in the second field. When you specify the second field, note that each byte counts. This means the entity name that you specify must match exactly the entity name on the RACF database.
  - If you choose to place the entity name in a buffer area, specify the length of the buffer in the first field. For the second field, do one of the following:
    - If you know the length of the entity name, specify the length in the second field. The length of the first field can be from 0 to 255, but *must* be equal to or greater than the length of the second field.
    - If you do not know the length of the entity name, specify 0 in the second field, and have RACF determine the number of characters in the entity name.

To use this keyword, you must specify RELEASE=1.9 or a later release number.

In general, you should use the RACF command processors to create RACF resource profiles, since only the command processors do complete validation of

profile name syntax. If you use RACROUTE REQUEST=DEFINE instead, you should create profiles which are supported by the command processors. For instance, RACROUTE REQUEST=DEFINE allows you to create a fully qualified generic profile in a general resource class and a data set profile containing characters that are not valid, but those profiles are not supported by the RACF command processors.

Recommendation: Use ENTITYX rather than ENTITY. With ENTITY, the entity name you pass to RACF must be in a buffer, the size of which is determined by the length in the RACF class descriptor table. If the maximum length of a class-descriptor entity increases in the future, you must modify your program to use a larger buffer. By using ENTITYX, you avoid this possible problem because you have removed the class descriptor table dependency from your program.

,VOLSER=*vol addr*
specifies the address of the volume serial number:

- For TYPE=ADDVOL, of the new volume to be added to the definition of the data set
- For TYPE=ADDVOL and CLASS=TAPEVOL, of the new volume being added to the tape volume set identified by ENTITY or ENTITYX
- For TYPE=DEFINE and CLASS=DATASET, of the catalog (for a VSAM data set), or of the volume on which the data set resides (for a non-VSAM data set).

The volume serial number is optional if DSTYPE=M is specified; it is ignored if the profile name is generic.

The field pointed to by the specified address contains the volume serial number, padded to the right with blanks if necessary to make six characters.

,ACCLVL=*access value addr*
,ACCLVL=(*access value addr,parm list addr***)**
specifies the tape-label access-level information for the MVS tape-label functions. The address must point to a field containing a one-byte length field (with a value from 0–8) followed by an 8-character string that is passed to the RACROUTE REQUEST=DEFINE installation exit routines. The parameter list address points to a parameter list containing additional information to be passed to the RACROUTE REQUEST=DEFINE installation exit routines.

RACF does not check or modify this information.

,ACEE=*acee addr*
specifies the address of the ACEE to be used during RACROUTE REQUEST=DEFINE processing.

If no ACEE is specified, RACF uses the TASK ACEE pointer (TCBSENV) in the extended TCB. If the TASK ACEE pointer is zero, RACF uses the main ACEE. The main ACEE's address is in the ASXBSENV field in the address-space extension block.

,AUDIT=NONE
,AUDIT=*audit value*
,AUDIT=(*audit value***(***access level***),***audit value***(***access level***),...)**
,AUDIT=*reg*
specifies the types of accesses and the access levels that are to be logged to the SMF data set.

For *audit value*, specify one of the following: ALL, SUCCESS, or FAILURES. You can optionally specify an *access level*(*access authority*) following each *audit value.*

Access Levels:

- EXECUTE is not audited. If you specify FAILURES (READ), RACF logs the READ attempt as a failure, but allows EXECUTE access to the data set.
- READ logs access attempts at any level. READ is the default access-level value.
- UPDATE logs access attempts at the UPDATE, CONTROL, and ALTER levels.
- CONTROL logs access attempts at the CONTROL and ALTER levels.
- ALTER logs access attempts at the ALTER level only.

Note: For more information about specific audit values and access levels, see *z/OS Security Server RACF Command Language Reference*.

RACF resolves combinations of conflicting specifications by using the most encompassing specification. Thus, in the case of the following:

```
ALL(UPDATE),FAILURES(READ)
```

RACF assumes SUCCESS(UPDATE),FAILURES(READ).

For compatibility with previous releases, register notation can also be specified as AUDIT=*reg* if the register is not given as a symbolic name; for example, ALL, SUCCESS, or FAILURES.

Logging is controlled separately for SUCCESS and FAILURES, and can also be suppressed or requested using the RACROUTE REQUEST=AUTH postprocessing installation exit routine.

If a register is specified, its low-order byte must contain one of the following valid audit values:

Bit	Meaning
0	ALL
1	SUCCESS
2	FAILURES
3	NONE
4-5	Qualifier for SUCCESS
6-7	Qualifier for FAILURES

The qualifier codes are as follows:

00	READ
01	UPDATE
10	CONTROL
11	ALTER

Only one of bits 0 through 3 can be on. If ALL is specified, the two qualifier fields can be used to request different logging levels for successful and unsuccessful events.

Note: RACF does not check the validity of the audit type if it has been added or modified by the RACROUTE REQUEST=DEFINE preprocessing or postprocessing exit routine.

AUDIT is valid if TYPE=DEFINE is specified.

,CHKAUTH=YES
,CHKAUTH=NO
specifies whether or not an internal RACROUTE REQUEST=AUTH with ATTR=ALTER is to be done to verify that the user is authorized to perform the operation.

CHKAUTH=YES is valid when TYPE=DEFINE,NEWNAME or TYPE=DEFINE,NEWNAMX, or TYPE=DELETE is specified.

For DSTYPE=T, CHKAUTH=YES specifies that an internal RACROUTE REQUEST=AUTH with ATTR=UPDATE be done to verify that the user is authorized to define a data set (TYPE=DEFINE), delete a data set (TYPE=DELETE), or add a volume (TYPE=ADDVOL).

The default is CHKAUTH=NO.

,CLASS=*'class name'*
,CLASS=*class name addr*
specifies that a profile is to be defined, modified, or deleted in the specified class. If an address is specified, the address must point to a one-byte length field followed by the class name (such as DATASET or TAPEVOL). The class name should be no longer than 8 characters.

Note: Do not use RACGLIST as the class name.

,DATA=*data addr*
specifies the address of a field that contains up to 255 characters of installation-defined data to be placed in the profile. The data address must point to a field containing a one-byte length field (whose value can range from 0 to 255) followed by the actual installation-defined data.

DATA is valid if TYPE=DEFINE is specified.

,DSTYPE=N
,DSTYPE=V
,DSTYPE=M
,DSTYPE=T
specifies the type of data set associated with the request:

N for non-VSAM

V for VSAM

M for model profile

T for tape

DSTYPE=T should not be specified unless the SETROPTS TAPEDSN option is active (RCVTTDSN bit is on); otherwise, the processing is the same as for RACROUTE REQUEST=DEFINE, CLASS='TAPEVOL'.

Specify DSTYPE only when the value of CLASS is DATASET.

,ENVIR=VERIFY
specifies that no profile is to be created, but that the user's authority to define

or rename the resource or profile is to be checked, along with any other authorization processing that is necessary.

If you specify ENVIR, you must specify RELEASE=1.8.1 or a later release number.

Notes:

1. If you do not specify ENVIR=VERIFY, normal RACROUTE REQUEST=DEFINE processing occurs.
2. Automatic direction of application updates does not propagate a RACROUTE REQUEST=DEFINE request if ENVIR=VERIFY is specified.

,ERASE=YES
,ERASE=NO

specifies whether the DASD data set, or the released space, is to be erased when it is deleted or part of its space is to be released for reuse.

If ERASE=YES is specified, the data set is erased when it is deleted or released for reuse.

If ERASE=NO is specified, the data set is not erased, deleted, or released.

The default is ERASE=NO.

Specify ERASE only for CLASS=DATASET.

Note: This parameter can be overridden by the RACF SETROPTS ERASE command.

,EXPDT=*expir-date addr*
,EXPDTX=*extended expir-date addr*
,RETPD=*retn-period addr*

specifies the address containing information about the expiration date or RACF security retention period of the data set.

- EXPDT=*expir-date addr* specifies the address of a 3-byte field containing the expiration date of the data set. The date is given in packed decimal form as YYDDDF, where YY is the year and DDD is the day number. The year must be in the range 00 through 99. The day number must be in the range 0 through 366. The year is treated as 19YY. To specify a year in the range 2000-2155, you must use EXPDTX instead of EXPDT. F allows the date to remain a positive integer when converted from packed decimal to hexadecimal. All fields are right-justified.

  Note: Processing of this keyword depends on the specification of the 2DGT_EXPDT statement in the z/OS SYS1.PARMLIB member ALLOC*xx*:

  – POLICY(ALLOW) results in RACF processing the EXPDT keyword as documented. Using the EXPDT keyword after January 1, 2000 with other than the values 99365 or 99366 results in a data set definition that expires after the default retention period as set by SETROPTS RETPD.

  – POLICY(WARN) results in RACF processing EXPDT as above. In addition, RACF issues message ICH902I, which states that you cannot specify dates beyond 1999 with this keyword.

  – POLICY(FAIL) results in RACF failing the request and issuing message, ICH903I, which indicates that a 3-byte expiration date cannot be specified. Instead, you must use the keyword EXPDTX, which specifies a 4-byte expiration date.

The values 99365, 99366, 99000, and 98000 are exempted from both the WARN and FAIL policy settings. RACF treats 99365 and 99366 as “never expire” dates. The 99000 and 98000 dates are allowed, and might be special to some OEM tape management products. Because these dates are earlier than the current date, RACF does not use them to determine the retention period for the data set. It uses the default retention period set by the SETROPTS RETPD command.

See *z/OS MVS Initialization and Tuning Reference* and the documentation associated with APAR OW39170 for more information on ALLOCxx.

- EXPDTX=*extended expir-date addr* specifies the address of a 4-byte field that contains the expiration date of the data set. The date is given in packed decimal form as CCYYDDDF, where CC is 00 for years in the range 1900–1999, 01 for years in range 2000–2099, and 02 for years in the range 2100–2155. YY is the year, and DDD is the day number. The year must be in the range 00 through 99. The day must be in the range 1 through 366. The combined CCYY value cannot specify a year greater than 2155, so 0255 is the maximum value that can be specified for the combined CCYY field. All fields are right-justified. F allows the date to remain positive when converted from packed decimal to hexadecimal.

  Note: Specifying 99365 or 99366 for YYDDD on EXPDT, or 0099365 or 0099366 for CCYYDDD on EXPDTX indicates an expiration date of NEVER EXPIRES. This means that an actual expiration date of 12/31/1999 cannot be specified using either of these keywords. Use the RETPD keyword with the appropriate value if that expiration date is desired.

- RETPD=*retn-period addr* specifies the address of a 2-byte binary field containing the number of days after which RACF protection for the data set expires. The value specified must be in the range 1 through 65533. To indicate that there is no expiration date, specify 65534.

If you do not specify any of these parameters, or if the date given on EXPDT or EXPDTX is prior to the current date, a default RACF security retention period is obtained from the RETPD keyword specified on an earlier RACF SETROPTS command.

These parameters are valid if CLASS=DATASET and DSTYPE=T.

,FILESEQ=*number*
,FILESEQ=*reg*

specifies the file sequence number of a tape data set on a tape volume or within a tape-volume set. The *number* must be in the range 1 through 9999. If a register is specified, it must contain the file sequence number in the low-order halfword. If CLASS=DATASET and DSTYPE=T are not specified, FILESEQ is ignored.

,GENERIC=YES
,GENERIC=ASIS

specifies whether the resource name is treated as a generic profile name. If GENERIC is specified with CLASS=DEFINE, NEWNAME, or NEWNAMX, GENERIC applies to both the old and new names. GENERIC is ignored if the GENCMD option on the RACF SETROPTS command is not specified for the class. See *z/OS Security Server RACF Command Language Reference*.

This keyword is designed primarily for use by RACF commands.

YES The resource name is considered a generic profile name, even if it does not contain a generic character: an asterisk (*), a percent sign (%), or, for general resource classes, an ampersand sign (&).

ASIS The resource name is considered a generic if it contains a generic character: an asterisk (*), a percent sign (%), or, for general resource classes, an ampersand sign (&).

,INSTLN=*parm list addr*
specifies the address of an area that is to contain parameter information meaningful to the RACROUTE REQUEST=DEFINE installation exit routines. This information is passed to the installation exit routines when they are given control from the RACROUTE REQUEST=DEFINE routine.

The INSTLN parameter can be used by an application program acting as a resource manager that needs to pass information to the RACROUTE REQUEST=DEFINE routine.

,LEVEL=*number*
,LEVEL=*reg*
specifies a level value for the profile. The level number must be a valid decimal number in the range 0 to 99. If a register is specified, its low-order byte must contain the binary representation of the number.

LEVEL is valid if TYPE=DEFINE is specified.

,MCLASS=*'class name'*
,MCLASS=*class name addr*
specifies the class to which the profile defined by MENTITY= or MENTX= belongs. If an address is specified, the address must point to a 1-byte length field followed by the class name. The class name should be no longer than 8 characters. The default is MCLASS=DATASET.

,MVOLSER=*volser addr*
specifies the address of the volume serial number of the volume associated with the profile in the MENTITY operand. The field pointed to by the specified address contains the volume serial number, padded to the right with blanks if necessary to make six characters.

If you specify MENTITY or MENTX and CLASS=DATASET, you must specify MVOLSER with the name of the VOLSER or with blanks.

If you specify with blanks, the discrete MENTITY or MENTX data set profile name must be unique, meaning it has no duplicates on the database. In this case, RACF determines the correct MVOLSER.

,MENTITY=*entity addr*
,MENTX=*extended entity address*
specifies the address of the name of the discrete or generic profile that is to be used:

- MENTITY=*entity addr* specifies the address of the name of the discrete or generic profile that is to be used as a model in defining the ENTITY or ENTITYX profile. The profile can belong to any class, as specified by the MCLASS parameter, and can be either a discrete or a generic profile.

  MENTITY can be specified with TYPE=DEFINE but not with TYPE=DEFINE,NEWNAME=*new resource name addr*.

  For data sets, the name is contained in a 44-byte field pointed to by the specified address. For general-resource classes, the length of the field is determined by the RACF class-descriptor table. The name is left-justified in the field and padded with blanks.

- MENTX=*extended entity address* specifies the address of the name of the discrete or generic profile that is to be used as a model from which to define the ENTITY or ENTITYX profile. The structure consists of two 2-byte length fields, followed by the entity name.
  - The first 2-byte field specifies a buffer length that can be from 0 to 255 bytes. This length field refers to the length of the buffer that contains the entity name from which you are modeling; it does not include the length of either length field.
  - The second 2-byte field specifies the actual length of the entity name from which you are modeling. This length field includes the length of the actual name without any trailing blanks; it does not include the length of either length field.

  These two length fields can be used in several different ways:
  - If you know the length of the entity name you are using as a model, you can specify 0 in the first field and the length of the entity name in the second field. When you specify the second field, note that each byte counts. This means the entity name that you specify is used as a model, using the specified length.
  - If you choose to place the entity name in a buffer area, specify the length of the buffer in the first field. For the second field, do one of the following:
    - If you know the length of the entity name you are using as a model, specify the length in the second field. The length of the first field can be from 0 to 255, but *must* be equal to or greater than the length of the second field.
    - If you do not know the length of the entity name you are using as a model, specify 0 in the second field, and have RACF determine the number of characters in the entity name.

  To use this keyword, you must specify RELEASE=1.9 or a later release number.

  Recommendation: Use MENTX rather than MENTITY. With MENTITY, the entity name you pass to RACF must be in a buffer, the size of which is determined by the length in the RACF class-descriptor table. If the maximum length of a class-descriptor entity increases in the future, you must modify your program to use a larger buffer. By using MENTX, you avoid this possible problem, because you remove the class descriptor table dependency from your program.

  The profile can belong to any class, as specified by the MCLASS parameter, and can be either a discrete or generic profile. MENTX can be specified with TYPE=DEFINE, but not with TYPE=DEFINE,NEWNAME= or TYPE=DEFINE,NEWNAMX=.

,MGENER=ASIS
,MGENER=YES

specifies whether the profile name defined by MENTITY or MENTX is to be treated as a generic name.

ASIS The profile name is considered a generic if it contains a generic character: an asterisk (*), a percent sign (%), or, for general resource classes, an ampersand sign (&).

YES The profile name is considered a generic, even if it does not contain a

generic character: an asterisk (*), a percent sign (%) or, for general resource classes, an ampersand sign (&).

MGENER is ignored if the GENCMD option on the RACF SETROPTS command is not specified for the class. See *z/OS Security Server RACF Command Language Reference*.

,MGMTCLA=*management type addr*
specifies the address of a management class to which the resource owner must have authority. The address must point to an 8-byte field that contains a management-class name preceded by a halfword length. If you specify MGMTCLA, you must specify TYPE=DEFINE, RESOWN, and RELEASE=1.8.1 or a later release number.

When MGMTCLA is specified, RACROUTE REQUEST=DEFINE processing invokes REQUEST=AUTH processing to verify that the RESOWNER is authorized to the management class.

,NOTIFY=*notify-id addr*
specifies the address of an 8-byte area containing the user ID of the RACF-defined user who is to be notified when an unauthorized attempt to access the resource protected by this profile is detected.

,OWNER=*owner id addr*
specifies the address of a field containing the profile owner's ID. The owner's ID must be a valid (RACF-defined) user ID or group name. The address must point to an 8-byte field containing the owner's name, left-justified and padded with blanks.

OWNER is valid if TYPE=DEFINE is specified.

,RACFIND=YES
,RACFIND=NO
specifies whether or not a discrete profile is involved in RACROUTE REQUEST=DEFINE processing.

When TYPE=DEFINE is specified, RACFIND=YES means that a discrete profile is to be created. When the request type TYPE=DELETE, DEFINE with NEWNAME or NEWNAMX, CHGVOL, or ADDVOL is specified, RACFIND=YES means that a discrete profile already exists. The bit on the VTOC is ignored.

When TYPE=DEFINE is specified, RACFIND=NO means that no discrete profile is to be created, but some authorization checking is required. For other types of action, no discrete profile should exist.

Notes:

1. Use of RACFIND=YES with TYPE=DEFINE is not a recommended programming interface unless NEWNAME, NEWNAMX, CHGVOL, or ADDVOL is also specified. Creation of discrete profiles is intended to be done either by using the RACF command processors or by using the MVS routines that create data sets.
2. If you are issuing RACROUTE REQUEST=DEFINE, TYPE=DELETE and all the following are true:
   - RACFIND=YES,
   - a discrete dataset name is specified, and
   - RACF finds no discrete dataset name profile for that name but does find a generic profile that matches the name

   RACF considers the deletion request successful even though no profile was deleted.

3. Automatic direction of application updates does not propagate a RACROUTE REQUEST=DEFINE request for DASD data sets when the RACFIND=NO keyword is specified.
4. Automatic direction of application updates does propagate a RACROUTE REQUEST=DEFINE request for tape data sets when the RACFIND=NO keyword is specified. Even though no DATASET class profile is updated, the TAPEVOL class profile is updated.

,RESOWN=*resource owner addr*
specifies the address of a field containing the resource owner's ID. If you specify RESOWN, you must specify TYPE=DEFINE and the current RELEASE parameter. The resource owner's ID must be a valid (RACF-defined) user ID or group name, or *NONE*. If the resource owner's ID is specified as *NONE*, RACF performs third-party authorization checking using USERID=*NONE*. The address must point to a 2-byte field followed by the resource owner's name.

,SECLABL=*addr*
specifies the address of an 8-byte, left-justified character field containing the security label.

To use this keyword, you must specify RELEASE=1.9 or a later release number.

An installation can use SECLABEL to establish an association between a specific RACF security level (SECLEVEL) and a set of (zero or more) RACF security categories (CATEGORY).

,SECLVL=*addr*
specifies the address of a list of installation-defined security-level identifiers. Each identifier is a halfword containing a value that corresponds to an installation-defined security-level name.

The identifiers must be in the range 1 through 254. Only one identifier can be passed in the list.

The list must start with a fullword containing the number of entries in the list (currently, only 0 or 1).

,STORCLA=*storage class addr*
specifies the address of the storage class to which the resource owner must have authority. The address must point to a 2-byte field followed by the management class name. If you specify STORCLA, you must specify TYPE=DEFINE, RESOWN, and RELEASE=1.8.1 or a later release number.

When specified, RACROUTE REQUEST=DEFINE processing invokes REQUEST=AUTH processing to verify that the RESOWNER is authorized to the storage class.

,TAPELBL=STD
,TAPELBL=BLP
,TAPELBL=NL
specifies the type of tape labeling to be done:

STD IBM or ANSI standard labels

BLP Bypass label processing

NL Unlabeled tapes.

For TAPELBL=BLP, the user must have the requested authority to the profile ICHBLP in the general-resource class FACILITY.

For TAPELBL=NL or BLP, the user is not allowed to protect volumes with volume serial numbers in the format “L*nnnnn*”.

The TAPELBL parameter is passed to the RACROUTE REQUEST=DEFINE installation exits.

This parameter is primarily intended for use by data-management routines to indicate the label type from the LABEL keyword on the JCL statement.

This parameter is valid for CLASS=DATASET and DSTYPE=T or CLASS=TAPEVOL.

,TYPE=DEFINE
,TYPE=DEFINE,NEWNAME=*new resource name addr*
,TYPE=DEFINE,NEWNAMX=*extended new resource name addr*
,TYPE=ADDVOL,OLDVOL=*old vol addr*
,TYPE=CHGVOL,OLDVOL=*old vol addr*
,TYPE=DELETE
specifies the type of action to be taken:

Note:

If SETROPTS ADDCREATOR is in effect when a new DATASET or general resource profile is defined, the profile creator’s user ID is placed on the profile access list with ALTER authority.

If SETROPTS NOADDCREATOR is in effect when:

- A new generic profile is defined, the profile creator’s user ID is not placed on the profile’s access list. If you use profile modeling when defining a generic profile, RACF copies the access list exactly. If the creator’s user ID appeared in the model’s access list, the same authority is copied to the new profile.
- A new discrete DATASET or TAPEVOL profile is defined, the profile creator’s user ID is placed on the profile’s access list with ALTER authority. If you use profile modeling when defining one these profiles, if the creator’s user ID appeared in the model’s access list, the authority is created in the new profile with ALTER authority.
- Any other new discrete profile is defined, the profiles creator’s user ID is not placed on the access list. If you use profile modeling when defining one of these profiles, RACF copies the access list exactly. If the creator’s user ID appeared in the model’s access list, the same authority is copied to the new profile.

DEFINE
adds the profile of the resource to the RACF database and establishes the current user as the owner of the profile.

DEFINE,NEWNAME
The address points to a field containing the new name for the resource that is to be renamed. The field should be 44 bytes when class is DATASET or the maximum name length allowed for the general-resource class.

NEWNAME is valid with CLASS=DATASET, FILE, and DIRECTRY. NEWNAME is not valid with DSTYPE=T.

DEFINE,NEWNAMX

The address points to a structure that consists of two 2-byte length fields, followed by the entity name.

- The first 2-byte field specifies a buffer length that can be from 0 to 255 bytes. This length field refers to the length of the buffer that contains the entity name; it does not include the length of either length field.
- The second 2-byte field specifies the actual length of the entity name. This length field includes the length of the actual name without any trailing blanks; it does not include the length of either length field.

These two length fields can be used in several different ways:

- If you know the length of the entity name, you can specify 0 in the first field and the length of the entity name in the second field. When you specify the second field, note that each byte counts. This means that the entity name you specify is added to the RACF database using the specified length.
- If you choose to place the entity name in a buffer area, specify the length of the buffer in the first field. For the second field, do one of the following:
  - If you know the length of the entity name, specify the length in the second field. The length of the first field can be from 0 to 255, but *must* be equal to or greater than the length of the second field.
  - If you do not know the length of the entity name, specify 0 in the second field, and have RACF determine the number of characters in the entity name.

NEWNAMX is valid with CLASS=DATASET, FILE, and DIRECTRY. NEWNAMX is not valid with DSTYPE=T.

To use this keyword, you must specify RELEASE=1.9 or later.

Recommendation: Use NEWNAMX rather than NEWNAME. With NEWNAME, the entity name you pass to RACF must be in a buffer, the size of which is determined by the length in the RACF class-descriptor table. If the maximum length of a class-descriptor entity increases in the future, you must modify your program to use a larger buffer. By using NEWNAMX, you avoid this possible problem, because you remove the class descriptor table dependency from your program.

The following parameters are ignored if you specify NEWNAME or NEWNAMX: ACCLVL, AUDIT, CATEGORY, DATA, ERASE, EXPDT, EXPDTX, FILESEQ, INSTLN, LEVEL, MCLASS, MENTITY, MENTX, MGENER, MVOLSER, NOTIFY, OWNER, RETPD, SECLABL, SECLVL, TAPELBL, UACC, UNIT, and WARNING.

ADDVOL

Adds the new volume to the definition of the specified resource.

For the DATASET class, the OLDVOL address specifies a previous volume of a multivolume data set.

For the TAPEVOL class, the ENTITY or ENTITYX address specifies a previous volume of a tape-volume set.

This parameter applies only to discrete profiles.

CHGVOL

Changes the volume serial number in the definition of the specified resource from the old volume serial number identified in OLDVOL to the new volume serial number identified in the VOLSER parameter.

This parameter applies only to discrete profiles. TYPE=CHGVOL is not valid with DSTYPE=T.

DELETE

Removes the profile from the RACF database. (For a multivolume data set or a tape-volume set, only the specified volume is removed from the definition.)

If DSTYPE=T is specified, the data sets must be deleted in reverse of the order in which they were created. For example, if file1 has *data-set1*, file2 has *data-set2*, and file3 has *data-set3*, you must do the RACROUTE REQUEST=DEFINE,TYPE=DELETE,DSTYPE=T for file3, file2, and file1, in that order.

,UACC=ALTER
,UACC=CONTROL
,UACC=UPDATE
,UACC=READ
,UACC=EXECUTE
,UACC=NONE
,UACC=*reg*

specifies a universal access authority for the profile. UACC must contain a valid access authority (EXECUTE, ALTER, CONTROL, UPDATE, READ, or NONE).

If a register is specified, the low-order byte must contain one of the following valid access authorities:

X'80' ALTER
X'40' CONTROL
X'20' UPDATE
X'10' READ
X'01' NONE
X'09' EXECUTE.

UACC is valid if TYPE=DEFINE is specified.

,UNIT=*unit addr*

specifies the address of a field containing unit information. If a unit address is specified, the unit information in the data set profile is replaced by the unit information pointed to by this unit address. The unit address must point to a field containing a 1-byte length field (whose value can range from 4 through 8) followed by the actual unit information. If the value in the length field is 4, the unit information is assumed to contain a copy of the information in the UCBTYP field of the UCB. Otherwise the unit information is assumed to be in the generic form (for example, 3330-1).

UNIT is valid if TYPE=CHGVOL or TYPE=DEFINE is specified and is ignored for generic names.

,WARNING=YES
,WARNING=NO

If WARNING=YES is specified, the WARNING indicator is set in the profile. Access is granted to the resource and the event is logged as a warning if either the SUCCESS or FAILURES logging is requested.

This keyword is designed primarily for use by RACF commands.

WARNING is valid if TYPE=DEFINE is specified.

,MF=S
specifies the standard form of the RACROUTE REQUEST=DEFINE macro instruction.

Return codes and reason codes

When you execute the macro, space for the RACF return code and reason code is reserved in the first two words of the RACROUTE parameter list. You can access them, using the ICHSAFP mapping macro, by loading the ICHSAFP pointer with the label that you specified on the list form of the macro. When control is returned, register 15 contains the SAF return code.

Note to Reader
All return and reason codes are shown in hexadecimal. Also, please note that SAF return code is presented as SAF RC and RACF return code is presented as RACF RC in the following section.

SAF RC	Meaning
00	RACROUTE REQUEST=DEFINE has completed successfully.

RACF RC	Meaning
00	RACROUTE REQUEST=DEFINE has completed successfully.

Note: For TYPE=DEFINE or TYPE=DELETE, it is possible that no profile was actually added or deleted although RACF has performed all request processing. This depends on the keywords specified and the generic profiles that might exist in your system.

Reason Code	Meaning
00	Indicates a normal completion.
08	Indicates that MODEL was specified, but the SECLABEL value has not been copied because of one of two reasons: • SETROPTS SECLABELCONTROL is on, but issuer is not SPECIAL, or • SETROPTS MLSTABLE is on, but SETROPTS MLQUIET is not

SAF RC	Meaning
04	The requested function could not be performed.

RACF RC	Meaning
00	No security decision could be made.

Reason Code	Meaning
00	The RACF router was not loaded; the request, resource, subsystem combination could not be found in

			the RACF ROUTER table; no successful exit processing can take place.
		04	Indicates RACFIND=NO was specified and no generic profile applying to the data set was found.
	04	RACROUTE REQUEST=DEFINE has completed processing.	
		Reason Code	**Meaning**
		00	Indicates the following: • For TYPE=DEFINE, the resource name was previously defined. • For TYPE=DEFINE,NEWNAME or NEWNAMX, the new resource name was previously defined. • For TYPE=DELETE, the resource name was not previously defined.
		04	Indicates for TYPE=DEFINE that the data set name was previously defined on a different volume and that the option disallowing duplicate data sets was specified at IPL.
08	The requested function failed.		
	RACF RC	**Meaning**	
	08	RACROUTE REQUEST=DEFINE has completed processing.	
		Reason Code	**Meaning**
		00	Indicates the following: • For TYPE=DEFINE, RACF has failed the check for authority to allocate a data set or create a profile with the specified name. • For TYPE=DELETE or TYPE=DEFINE,NEWNAME or NEWNAMX, if CHKAUTH=YES is specified, RACF has failed the authorization check. • For TYPE=ADDVOL,OLDVOL or for TYPE=CHGVOL,OLDVOL, indicates that no profile was found that contained the specified volume and entity name.
		04	Indicates for TYPE=DEFINE that no profile was found to protect the data set and that the RACF protect-all option is in effect.

08 Indicates TYPE=DEFINE (or TYPE=ADDVOL,OLDVOL or TYPE=CHGVOL,OLDVOL) and DSTYPE=T were specified, and the user is not authorized to define a data set on the specified volume, or an ADDVOL was attempted to add a forty-third volume, but the maximum number of volumes that a data set can span is 42.

0C Indicates TYPE=DEFINE and DSTYPE=T were specified, and the user is not authorized to define a data set with the specified name.

10 Indicates DSTYPE=T or CLASS=TAPEVOL was specified, and the user is not authorized to specify TAPELBL=(,BLP)

18 Indicates that the user is not authorized to issue RACROUTE REQUEST=DEFINE when the system is in the tranquil state (when SETROPTS MLQUIET option is in effect).

1C This can occur when PROFDEF=NO is specified in the class descriptor table, or if a user attempts to define profiles to the APPCPORT or APPCTP class.

20 Indicates the data set owner is not authorized to use the specified DFP storage class.

24 Indicates the data set owner is not authorized to use the specified DFP management class.

28 For CLASS=FILE or CLASS=DIRECTRY, the second qualifier in the ENTITY or ENTITYX resource name is not a RACF-defined user.

2C For TAPE data set, a security label is expected but is not specified.

30 For TAPE data set, the USER SECLABEL does not dominate the TAPE's security label when TYPE=DELETE. When type is DEFINE, ADDVOL, OR CHGVOL, the USER security label is not equal to the TAPE's security label.

34 For TYPE=DEFINE, RACF has denied the authorization to allocate

the data set with that name because of one of the following:

- The profile protecting it has no security label.
- The user does not dominate the security label of the profile protecting the entity.
- The data set is not protected by any profile.

For TYPE=DEFINE, NEWNAME= or NEWNAMX=, RACF has denied the authorization to rename the data set because the new data set name is either:

- Protected by a profile with no security label.
- Protected by a profile whose security label the user does not dominate.
- Protected by no profile.

38 The request to rename a profile is denied because the SETROPTS MLS option is in effect and one of the following is true:

- The entity is not protected by a profile.
- The entity is protected by a profile with no security label.
- The entity is protected by a profile whose security label the user cannot possibly dominate.

3C The request to rename the resource is denied because the SETROPTS MLS option is in effect and one of the following is true:

- The new name is not protected by any profile.
- The new name is protected by a profile with no security label.
- The user can never equal the security label that protects the new name.

40 The request to rename the resource is denied because the security label of the generic profile protecting the new data set name does not dominate the security label of the generic profile protecting the entity name. This is equivalent to writing down, and is

disallowed because the SETROPTS MLS option is in effect.

44 The request to RACROUTE REQUEST=DEFINE is denied because the profile defined has a security label different from the generic profile covering it and that the SETROPTS MLSTABLE option is in effect. This happens under the following circumstances:

- The request to define a DASDVOL data set is denied because the parent generic profile has a different security label.
- The request to define a TAPEVOL data set failed for one of the following reasons:
  - The data set has a parent generic with a different security label.
  - The tape volume is not defined and a generic tape profile exists with a security label different from the security label added to the discrete tape profile.
  - The tape volume is defined and the security label being added is different from the security label of the generic profile protecting it.
- The request to add a volume is denied because the new volume has a security label different from the security label of the generic profile protecting it.
- The request to rename the profile is denied because the security label of the generic profile covering the new name is different from the security label of the entity profile.

48 The request to REQUEST=DEFINE is failed because the user is not SPECIAL, SETROPTS GENERICOWNER is in effect, and one of the following happens:

- For TYPE=DEFINE, the user cannot define the profile because of generic owner requirements with respect to the generic profile

covering the entity name. This restriction does not apply to data sets.

- For TYPE=DEFINE, NEWNAME= or NEWNAMX=, the user does not meet the generic owner requirements with respect to the less specific generic profile for NEWNAME. This reason does not apply to the DATASET class.
- For TYPE=ADDVOL, the user is not allowed to add a volume profile because a generic profile exists in the class and the user does not meet the generic owner requirement.
- For TYPE=DEFINE, DSTYPE=T, and CLASS=DATASET, the request is failed because a discrete, automatic, tape profile is defined, but the user does not meet the generic owner requirement with respect to the generic TAPEVOL profile.

4C Indicates that the RESOWNER is a revoked user ID.

0C For TYPE=DEFINE,NEWNAME or NEWNAMX, the old resource name was not defined; or for CLASS=DATASET, if the generation-data-group (GDG) modeling function is active, an attempt was made to rename a GDG name to a name that requires the creation of a new profile; or if generic profile checking is active, the old resource name was protected by a generic profile and there is no generic profile that protects the new resource name. This last case refers only to an attempt to rename an existing profile, which cannot be found.

10 For TYPE=DEFINE with MENTITY or MENTX, the model resource was not defined.

64 Indicates that the CHECK subparameter of the RELEASE keyword was specified on the execute form of the RACROUTE REQUEST=DEFINE macro; however, the list form of the macro does not have the same RELEASE parameter. Macro processing terminates.

Example 1

Operation: Invoke RACF to define a discrete profile for a non-VSAM data set residing on the volume pointed to by register 8. Register 7 points to the data set name. All successful requests for update authority to the data set are to be audited, as well as all unsuccessful ones.

```
RACROUTE REQUEST=DEFINE,ENTITY=(R7),VOLSER=(R8),CLASS='DATASET',  X
         AUDIT=(SUCCESS(UPDATE),FAILURES),WORKA=RACWK,            X
         RACFIND=YES
    .
    .
    .
RACWK    DS   CL512
```

Example 2

Operation: Use the standard form of the RACROUTE REQUEST=DEFINE macro to define a discrete data set profile for a non-VSAM DASD data set. The data set for which you are creating a profile is a non-VSAM DASD data set named DSNAME. It resides on a volume named VOLID. You want to create a discrete profile by specifying the RACFIND keyword. In addition, you want to notify the user called USERNAME of any access attempts that have been rejected because they exceed the UACC you are allowing for READ.

```
RACROUTE REQUEST=DEFINE,ENTITY=DSNAME,VOLSER=VOLID,    X
         CLASS='DATASET',UACC=READ,WORKA=RACWK,        X
         RACFIND=YES,NOTIFY=USERNAME,RELEASE=1.7
      .
      .
      .
RACWK    DS   CL512
```

Example 3

Operation: Use the standard form of the macro to check the authority of a user to define a discrete data set profile for a non-VSAM DASD data set, but do not actually build the profile. The name of the data set is DSNAME.

```
RACROUTE REQUEST=DEFINE,ENTITY=DSNAME,VOLSER=VOLID,  X
         CLASS='DATASET',RACFIND=NO,WORKA=RACWK
      .
      .
      .
RACWK    DS   CL512
```

Example 4

Operation: Use the standard form of the macro to define a generic data set profile named PROFNAME. As a model for the new profile, use the discrete profile named MDELPROF whose volume serial number is in MDELVOL. Notify the user named USERNAME of any access attempts that have been rejected because they exceed the UACC you are allowing for READ.

```
RACROUTE REQUEST=DEFINE,ENTITY=PROFNAME,                    X
         CLASS='DATASET',GENERIC=YES,MENTITY=MDELPROF,      X
         MVOLSER=MDELVOL,UACC=READ,WORKA=RACWK,             X
         NOTIFY=USERNAME,RELEASE=1.7
      .
      .
      .
RACWK    DS   CL512
```

Example 5

Operation: Use the standard form of the macro to define a tape-volume profile for a volume whose ID is VOLID. Allow a universal access level of READ.

```
RACROUTE REQUEST=DEFINE,ENTITY=VOLID,CLASS='TAPEVOL',        X
         UACC=READ,WORKA=RACWK
     .
     .
RACWK    DS   CL512
```

Example 6

Operation: Use the standard form of the macro to delete a discrete data set profile named DSNAME located on the volume named VOLID.

```
RACROUTE REQUEST=DEFINE,TYPE=DELETE,ENTITY=DSNAME,      X
         VOLSER=VOLID,CLASS='DATASET',WORKA=RACWK
      .
      .
      .
RACWK    DS   CL512
```

RACROUTE REQUEST=DEFINE (list form)

The list form of the RACROUTE REQUEST=DEFINE macro is written as follows. Refer to the Standard Form of the RACROUTE REQUEST=DEFINE macro to determine additional parameters that are required by the time the RACROUTE service is invoked using the Execute form of the macro.

name	*name*: Symbol. Begin *name* in column 1.
b	One or more blanks must precede RACROUTE.
RACROUTE	
b	One or more blanks must follow RACROUTE.
REQUEST=DEFINE	
,ACCLVL=*access value addr*	*access value addr*: A-type address
,ACCLVL=(*access value addr,parm list addr*)	*parm list addr*: A-type address
,ACEE=*acee addr*	*acee addr*: A-type address
,AUDIT=NONE	
,AUDIT=*audit value*	*audit value*: ALL, SUCCESS, or FAILURES
,AUDIT=(*audit value (access level), audit value (access level)*)	*access level*: READ, UPDATE, CONTROL, or ALTER **Default:** AUDIT=READ
,CHKAUTH=YES	
,CHKAUTH=NO	**Default:** CHKAUTH=NO

,CLASS=*'class name'* ,CLASS=*class name addr*	*class name*: 1–8 character name *class name addr*: A-type address **Default:** CLASS=DATASET
,DATA=*data addr*	*data addr*: A-type address
,DSTYPE=N ,DSTYPE=V ,DSTYPE=M ,DSTYPE=T	**Default:** DSTYPE=N
,ENTITY=*profile name addr*	*profile name addr*: A-type address
,ENTITYX=*extended profile name addr*	*extended profile name addr*: A-type address **Note:** ENTITY or ENTITYX must be specified on the list, execute, or modify form of the macro.
,ENVIR=VERIFY	Specifies that only verification is to be done. **Default:** Normal RACROUTE REQUEST=DEFINE processing.
,ERASE=YES ,ERASE=NO	**Default:** ERASE=NO
,EXPDT=*expir-date addr*	*expir-date addr*: A-type address
,EXPDTX=*extended expir-date addr*	*extended expir-date addr*: A-type address
,RETPD=*retn-period addr*	*retn-period addr*: A-type address
,FILESEQ=*number*	*number*: 1–9999
,GENERIC=YES ,GENERIC=ASIS	**Default:** GENERIC=ASIS
,INSTLN=*parm list addr*	*parm list addr*: A-type address
,LEVEL=*number*	**Default:** LEVEL=zero.
,MCLASS=*'class name'* ,MCLASS=*class name addr*	*class name*: 1–8 character name *class name addr*: A-type address **Default:** MCLASS=DATASET
,MENTITY=*entity addr*	*entity addr*: A-type address
,MENTX=*extended entity addr*	*extended entity addr*: A-type address
,MGENER=ASIS ,MGENER=YES	**Default:** MGENER=ASIS
,MGMTCLA=*management*	*management type addr*: A-type address

type addr	**Default:** See description of parameter.
,MVOLSER=*volser addr*	*volser addr*: A-type address
,NOTIFY=*notify-id addr*	*notify-id addr*: A-type address
,OWNER=*owner id addr*	*owner id addr*: A-type address
,RACFIND=YES ,RACFIND=NO	
,SECLABL=*addr*	*addr*: A-type address
,SECLVL=*addr*	*addr*: A-type address
,STORCLA=*storage class addr*	*storage class addr*: A-type address
,TAPELBL=STD ,TAPELBL=BLP ,TAPELBL=NL	**Default:** TAPELBL=STD
,TYPE=DEFINE	**Default:** TYPE=DEFINE
,TYPE=DEFINE, NEWNAME=*new resource name addr*	*new resource name addr*: A-type address or register (2) - (12)
,TYPE=DEFINE, NEWNAMX=*extended new resource name addr*	*extended new resource name addr*: A-type address or register (2) - (12)
,TYPE=ADDVOL, OLDVOL=*old vol addr*	*old vol addr*: A-type address or register (2) - (12)
,TYPE=CHGVOL, OLDVOL=*old vol addr*	*old vol addr*: A-type address or register (2) - (12)
,TYPE=DELETE	
,UACC=ALTER ,UACC=CONTROL ,UACC=UPDATE ,UACC=READ ,UACC=EXECUTE ,UACC=NONE	
,UNIT=*unit addr*	*unit addr*: A-type address
,VOLSER=*vol addr*	*vol addr*: A-type address

	Note: VOLSER is required (on either LIST or EXECUTE) for CLASS=DATASET and DSTYPE not equal to M when a discrete profile name is used.
,WARNING=YES	
,WARNING=NO	**Default:** WARNING=NO **Note:** Warning is valid if TYPE=DEFINE is specified.
,MF=L	

The parameters are explained under the standard form of the RACROUTE REQUEST=DEFINE macro instruction with the following exception:

,MF=L
specifies the list form of the RACROUTE REQUEST=DEFINE macro instruction.

RACROUTE REQUEST=DEFINE (execute form)

The execute form of the RACROUTE REQUEST=DEFINE macro is written as follows. Refer to the Standard Form of the RACROUTE REQUEST=DEFINE macro to determine additional parameters that are required by the time the RACROUTE service is invoked using the Execute form of the macro.

name	*name*: Symbol. Begin *name* in column 1.
b	One or more blanks must precede RACROUTE.
RACROUTE	
b	One or more blanks must follow RACROUTE.
REQUEST=DEFINE	
,ACCLVL=*access value addr*	*access value addr*: Rx-type address or register (2) - (12)
,ACCLVL=(*access value addr,parm list addr*)	*parm list addr*: Rx-type address or register (2) - (12)
,ACEE=*acee addr*	*acee addr*: Rx-type address or register (2) - (12)
,AUDIT=NONE	
,AUDIT=*audit value*	*audit value*: ALL, SUCCESS, or FAILURES
,AUDIT=(*audit value (access level), audit value (access level)*)	*access level*: READ, UPDATE, CONTROL, or ALTER

,AUDIT=*reg*	*reg*: Register (2) - (12)
,CHKAUTH=YES ,CHKAUTH=NO	
,CLASS=*class name addr*	*class name addr*: Rx-type address or register (2) - (12)
,DATA=*data addr*	*data addr*: Rx-type address or register (2) - (12)
,DSTYPE=N ,DSTYPE=V ,DSTYPE=M ,DSTYPE=T	
,ENTITY=*profile name addr*	*profile name addr*: Rx-type address
,ENTITYX=*extended profile name addr*	*extended profile name addr*: Rx-type address or register (2) - (12) **Note:** ENTITY or ENTITYX must be specified on the list, execute, or modify form of the macro.
,ENVIR=VERIFY	Specifies that only verification is to be done.
,ERASE=YES ,ERASE=NO	
,EXPDT=*expir-date addr*	*expir-date addr*: Rx-type address or register (2) - (12)
,EXPDTX=*extended expir-date addr*	*extended expir-date addr*: Rx-type address or register (2) - (12)
,RETPD=*retn-period addr*	*retn-period addr*: Rx-type address or register (2) - (12)
,FILESEQ=*number*	*number*: 1–9999
,FILESEQ=*reg*	*reg*: Register (2) - (12)
,GENERIC=YES ,GENERIC=ASIS	
,INSTLN=*parm list addr*	*parm list addr*: Rx-type address or register (2) - (12)
,LEVEL=*number*	
,LEVEL=*reg*	*reg*: Register (2) - (12)
,MCLASS=*class name addr*	*class name addr*: Rx-type address or register (2) - (12)
,MENTITY=*entity addr*	*entity addr*: Rx-type address or register (2) - (12)
,MENTX=*extended entity addr*	*extended entity addr*: Rx-type address or register (2) - (12)

,MGENER=ASIS ,MGENER=YES	
,MGMTCLA=*management type addr*	*management type addr*: Rx-type address or register (2) - (12)
,MVOLSER=*volser addr*	*volser addr*: Rx-type address or register (2) - (12)
,NOTIFY=*notify-id addr*	*notify-id addr*: Rx-type address or register (2) - (12)
OWNER=*owner id addr*	*owner id addr*: Rx-type address or register (2) - (12)
,RACFIND=YES ,RACFIND=NO	
,RELEASE=*number* ,RELEASE=(,CHECK) ,RELEASE=(*number*,CHECK)	*number*: See Standard Form **Default:** RELEASE=1.6
,RESOWN=*resource owner addr*	*resource owner addr*: Rx-type address or register (2) - (12)
,SECLABL=*addr*	*addr*: Rx-type address or register (2) - (12)
,SECLVL=*addr*	*addr*: Rx-type address or register (2) - (12)
,STORCLA=*storage class addr*	*storage class addr*: Rx-type address or register (2) - (12)
,TAPELBL=STD ,TAPELBL=BLP ,TAPELBL=NL	
,TYPE=DEFINE	
,TYPE=DEFINE, NEWNAME=*new resource name addr*	*new resource name addr*: A-type address or register (2) - (12)
,TYPE=DEFINE, NEWNAMX=*extended new resource name addr*	*extended new resource name addr*: A-type address or register (2) - (12)
,TYPE=ADDVOL, OLDVOL=*old vol addr*	*old vol addr*: A-type address or register (2) - (12)
,TYPE=CHGVOL, OLDVOL=*old vol addr*	*old vol addr*: A-type address or register (2) - (12)
,TYPE=DELETE	

,UACC=ALTER	
,UACC=CONTROL	
,UACC=UPDATE	
,UACC=READ	
,UACC=EXECUTE	
,UACC=NONE	
,UACC=*reg*	*reg*: Register (2) - (12)
,UNIT=*unit addr*	*unit addr*: Rx-type address or register (2) - (12)
,VOLSER=*vol addr*	*vol addr*: Rx-type address or register (2) - (12) **Note:** VOLSER is required for CLASS=DATASET and DSTYPE not equal to M when a discrete profile name is used.
,WARNING=YES ,WARNING=NO	**Note:** Warning is valid if TYPE=DEFINE is specified.
,MF=(E,*ctrl addr*)	*ctrl addr*: Rx-type address or register (1) or (2) - (12)

The parameters are explained under the standard form of the RACROUTE REQUEST=DEFINE macro instruction with the following exceptions:

,MF=(E,*ctrl addr***)**
specifies the execute form of the RACROUTE REQUEST=DEFINE macro using a remote, control-program parameter list.

,RELEASE=*number*
,RELEASE=(,CHECK)
,RELEASE=(*number***,CHECK)**
specifies the RACF release level of the parameter list to be generated by this macro.

To use the parameters associated with a release, you must specify the release number of that release or a later release number. If you specify an earlier release level, the parameter is not accepted by macro processing, and an error message is issued at assembly time.

The default is RELEASE=1.6.

When you specify the RELEASE keyword, checking is done at assembly time. Compatibility between the list and execute forms of the RACROUTE REQUEST=DEFINE macro is validated at execution time if you specify the CHECK subparameter on the execute form of the macro.

The size of the list form expansion must be large enough to accommodate all parameters defined by the RELEASE keyword on the execute form of the macro. Otherwise, when CHECK processing is requested, the execute form of the macro is not done, and a return code of X'64' is returned.

RACROUTE REQUEST=DEFINE (modify form)

The modify form of the RACROUTE REQUEST=DEFINE macro is written as follows. Refer to the Standard Form of the RACROUTE REQUEST=DEFINE macro to determine additional parameters that are required by the time the RACROUTE service is invoked using the Execute form of the macro.

name	*name*: Symbol. Begin *name* in column 1.
b	One or more blanks must precede RACROUTE.
RACROUTE	
b	One or more blanks must follow RACROUTE.
REQUEST=DEFINE	
,ACCLVL=*access value addr*	*access value addr*: Rx-type address or register (2) - (12)
,ACCLVL=(*access value addr, parm list addr*)	*parm list addr*: Rx-type address or register (2) - (12)
,ACEE=*acee addr*	*acee addr*: Rx-type address or register (2) - (12)
,AUDIT=NONE	
,AUDIT=*audit value*	*audit value*: ALL, SUCCESS, or FAILURES
,AUDIT=(*audit value (access level), audit value (access level)*)	*access level*: READ, UPDATE, CONTROL, or ALTER
,AUDIT=*reg*	*reg*: Register (2) - (12)
,CHKAUTH=YES ,CHKAUTH=NO	
,CLASS=*class name addr*	*class name addr*: Rx-type address or register (2) - (12)
,DATA=*data addr*	*data addr*: Rx-type address or register (2) - (12)
,DSTYPE=N ,DSTYPE=V ,DSTYPE=M ,DSTYPE=T	
,ENTITY=*profile name addr*	*profile name addr*: Rx-type address

,ENTITYX=*extended profile name addr*	*extended profile name addr*: Rx-type address or register (2) - (12) **Note:** ENTITY or ENTITYX must be specified on either the list, execute, or modify form of the macro.
,ENVIR=VERIFY	Specifies that only verification is to be done.
,ERASE=YES ,ERASE=NO	
,EXPDT=*expir-date addr*	*expir-date addr*: Rx-type address or register (2) - (12)
,EXPDTX=*extended expir-date addr*	*extended expir-date addr*: Rx-type address or register (2) - (12)
,RETPD=*retn-period addr*	*retn-period addr*: Rx-type address or register (2) - (12)
,FILESEQ=*number*	*number*: 1–9999
,FILESEQ=*reg*	*reg*: Register (2) - (12)
,GENERIC=YES ,GENERIC=ASIS	
,INSTLN=*parm list addr*	*parm list addr*: Rx-type address or register (2) - (12)
,LEVEL=*number*	
,LEVEL=*reg*	*reg*: Register (2) - (12)
,MCLASS=*class name addr*	*class name addr*: Rx-type address or register (2) - (12)
,MENTITY=*entity addr*	*entity addr*: Rx-type address or register (2) - (12)
,MENTX=*extended entity addr*	*extended entity addr*: Rx-type address or register (2) - (12)
,MGENER=ASIS ,MGENER=YES	
,MGMTCLA=*management type addr*	*management type addr*: Rx-type address or register (2) - (12)
,MVOLSER=*volser addr*	*volser addr*: Rx-type address or register (2) - (12)
,NOTIFY=*notify-id addr*	*notify-id addr*: Rx-type address or register (2) - (12)
,OWNER=*owner id addr*	*owner id addr*: Rx-type address or register (2) - (12)
,RACFIND=YES ,RACFIND=NO	

,RESOWN=*resource owner addr*	*resource owner addr*: Rx-type address or register (2) - (12)
,SECLABL=*addr*	*addr*: Rx-type address or register (2) - (12)
,SECLVL=*addr*	*addr*: Rx-type address or register (2) - (12)
,STORCLA=*storage class addr*	*storage class addr*: Rx-type address or register (2) - (12)
,TAPELBL=STD ,TAPELBL=BLP ,TAPELBL=NL	
,TYPE=DEFINE	
,TYPE=DEFINE, NEWNAME=*new resource name addr*	*new resource name addr*: A-type address or register (2) - (12)
,TYPE=DEFINE, NEWNAMX=*extended new resource name addr*	*extended new resource name addr*: A-type address or register (2) - (12)
,TYPE=ADDVOL, OLDVOL=*old vol addr*	*old vol addr*: A-type address or register (2) - (12)
,TYPE=CHGVOL, OLDVOL=*old vol addr*	*old vol addr*: A-type address or register (2) - (12)
,TYPE=DELETE	
,UACC=ALTER ,UACC=CONTROL ,UACC=UPDATE ,UACC=READ ,UACC=EXECUTE ,UACC=NONE	
,UACC=*reg*	*reg*: Register (2) - (12)
,UNIT=*unit addr*	*unit addr*: Rx-type address or register (2) - (12)
,VOLSER=*vol addr*	*vol addr*: Rx-type address or register (2) - (12) **Note:** VOLSER is required for CLASS=DATASET and DSTYPE not equal to M when a discrete profile name is used.
,WARNING=YES ,WARNING=NO	**Note:** Warning is valid if TYPE=DEFINE is specified.

,MF=(M,*ctrl addr*) *ctrl addr*: Rx-type address or register (1) or (2) - (12)

The parameters are explained under the standard form of the RACROUTE REQUEST=DEFINE macro instruction with the following exceptions:

,MF=(M,*ctrl addr*)
specifies the modify form of the RACROUTE REQUEST=DEFINE macro using a remote control-program parameter list.

RACROUTE REQUEST=DIRAUTH: Check RACF-directed authorization to a sent message

The RACROUTE REQUEST=DIRAUTH macro works on behalf of the message-transmission managers (that is, VTAM, TSO/E, and Session Manager) to ensure that the receiver of a message meets security-label authorization requirements. That is, the SECLABEL of the receiver of the message must dominate (be equal to or higher than) the SECLABEL of the message.

All parameter lists generated by the RACROUTE REQUEST=DIRAUTH macro are in a format that allows assembled code to be moved above 16MB of virtual storage without being reassembled.

To use this service, you must specify RELEASE=1.9 or a later release number.

The caller of RACROUTE REQUEST=DIRAUTH must be authorized (APF-authorized, in system key 0–7, or in supervisor state).

The caller cannot hold any locks when issuing RACROUTE REQUEST=DIRAUTH.

This request is SRB-mode compatible.

RACROUTE REQUEST=DIRAUTH (standard form)

The standard form of the RACROUTE REQUEST=DIRAUTH macro is written as follows. For a description of additional keywords that you can code and additional parameters that are required on the RACROUTE request, but that are not specific to this request type, see “RACROUTE (standard form)” on page 13.

Note

RACROUTE REQUEST=DIRAUTH requires an ACEE. For most applications, the system will have created an ACEE to represent the active user. However, for special cases where no ACEE exists, the invoker must create one before invoking RACROUTE REQUEST=DIRAUTH.

The most common way to create an ACEE is to issue a RACROUTE REQUEST=VERIFY, specifying ENVIR=CREATE. After all RACROUTE invocations are complete, the invoker should issue RACROUTE REQUEST=VERIFY with ENVIR=DELETE specified, to delete the ACEE previously created.

name	*name*: Symbol. Begin *name* in column 1.
b	One or more blanks must precede RACROUTE.
RACROUTE	
b	One or more blanks must follow RACROUTE.
REQUEST=DIRAUTH	
,RTOKEN=*message token addr*	*message token addr*: A-type address or register (2) - (12)
,LOG=ASIS ,LOG=NOFAIL	**Default**=ASIS
,MF=S	

The parameters are explained as follows:

,LOG=ASIS
,LOG=NOFAIL
specifies the types of access attempts to the DIRAUTH resource class that RACF is to record on the SMF data set.

ASIS RACF records the event in the manner specified on the SETR LOGOPTIONS command for the DIRAUTH resource class.

NOFAIL
If the authorization check fails, RACF does not record the attempt.

If the authorization check succeeds, RACF records the attempt as it does in ASIS.

,RTOKEN=*message token addr*
specifies the address of the token of a resource (RTOKEN). The RTOKEN data contains the user token (UTOKEN) of the creator of the resource. If the first two bytes (length and version) are equal to 0, it is the same as not specifying the RTOKEN.

,MF=S
specifies the standard form of the RACROUTE REQUEST=DIRAUTH macro instruction.

Return codes and reason codes

When you execute the macro, space for the RACF return code and reason code is reserved in the first two words of the RACROUTE parameter list. You can access them using the ICHSAFP mapping macro, by loading the ICHSAFP pointer with the label that you specified on the list form of the macro. When control is returned, register 15 contains the SAF return code.

Note to Reader

All return and reason codes are shown in hexadecimal. Also, please note that SAF return code is presented as SAF RC and RACF return code is presented as RACF RC in the following section.

SAF RC	Meaning
00	RACROUTE REQUEST=DIRAUTH has completed successfully.

RACF RC	Meaning
00	Receiver is authorized to view the message.

Reason Code	Meaning
00	Function completed successfully.
04	RTOKEN passed belongs to an operator or a trusted user.

SAF RC	Meaning
04	The requested function could not be performed.

RACF RC	Meaning
00	No security decision could be made.

Reason Code	Meaning
00	The RACF router was not loaded; the request, resource, subsystem combination could not be found in the RACF ROUTER table; no successful exit processing can take place.

RACF RC	Meaning
04	DIRAUTH cannot make a decision.

Reason Code	Meaning
00	DIRAUTH class not active, or ACEE does not contain TOKEN information.
04	The caller was not SRB-mode compatible.
08	The definition of the provided security label was not found.
0C	The translation of the security label to its defining security level and categories failed.
10	The SECLABEL general-resource class was either not activated by SETROPTS CLASSACT(SECLABEL) or not brought into storage by SETROPTS RACLIST(SECLABEL).
14	No defining security level exists in the SECLABEL profile.

		FF	An unexpected error occurred while checking security-label authorization.
	0C	Parameters passed to DIRAUTH are not valid.	
		Reason Code	**Meaning**
		00	The resource token (RTOKEN) was not specified.
		04	Resource token (RTOKEN) specified is not valid.
08	The requested function failed.		
	RACF RC	**Meaning**	
	08	Receiver is not authorized to view the message.	
		Reason Code	**Meaning**
		00	The security label in the user's ACEE does not currently dominate that of the message; however, the user does possess a security label that can dominate that of the message.
		04	The user's security label does not dominate that of the message, and the user does not possess a security label that ever will.

Example 1

Operation: Invoke the RACROUTE REQUEST=DIRAUTH macro on behalf of the VTAM resource manager to perform security-label authorization checking in the "receiving" user's address space to ensure that the receiver's security label dominates that of the message. Specify that RACF should audit the event as specified in the SETROPTS LOGOPTIONS value for the DIRAUTH class.

In this example, the receiver's SECLABEL can never dominate the SECLABEL found in the TOKEN specified on the RTOKEN= keyword. The return code received from the DIRAUTH service is 8 and the reason code is 4.

Note: The message cannot be received by anyone other than the person to whom it was directed.

```
RACROUTE  REQUEST=DIRAUTH,WORKA=RACWK,RTOKEN=(8),       X
          LOG=ASIS,RELEASE=1.9.2
  .
  .
RACWK     DS  CL512
```

RACROUTE REQUEST=DIRAUTH (list form)

The list form of the RACROUTE REQUEST=DIRAUTH macro is written as follows. Refer to the Standard Form of the RACROUTE REQUEST=DIRAUTH macro to determine additional parameters that are required by the time the RACROUTE service is invoked using the Execute form of the macro.

name	*name*: Symbol. Begin *name* in column 1.
b	One or more blanks must precede RACROUTE.
RACROUTE	
b	One or more blanks must follow RACROUTE.
REQUEST=DIRAUTH	
,MF=L	

The parameters are explained under the standard form of the RACROUTE REQUEST=DIRAUTH macro with the following exception:

,MF=L
specifies the list form of the RACROUTE REQUEST=DIRAUTH macro instruction.

RACROUTE REQUEST=DIRAUTH (execute form)

The execute form of the RACROUTE REQUEST=DIRAUTH macro is written as follows. Refer to the Standard Form of the RACROUTE REQUEST=DIRAUTH macro to determine additional parameters that are required by the time the RACROUTE service is invoked using the Execute form of the macro.

name	*name*: Symbol. Begin *name* in column 1.
b	One or more blanks must precede RACROUTE.
RACROUTE	
b	One or more blanks must follow RACROUTE.
REQUEST=DIRAUTH	
,RELEASE=*number* ,RELEASE=(,CHECK) ,RELEASE=(*number*,CHECK)	*number*: See Standard Form
,LOG=ASIS ,LOG=NOFAIL	

,RTOKEN=*message token addr*	*message token addr*: Rx-type address or register (2) - (12)
,MF=(E,*ctrl addr*)	*ctrl addr*: Rx-type address or register (1) or (2) - (12)

The parameters are explained under the standard form of the RACROUTE REQUEST=DIRAUTH macro with the following exceptions:

,RELEASE=*number*
,RELEASE=(,CHECK)
,RELEASE=(*number***,CHECK)**
specifies the RACF release level of the parameter list to be generated by this macro.

To use the parameters associated with a release, you must specify the release number of that release or a later release number. If you specify an earlier release level, the parameter is not accepted by macro processing, and an error message is issued at assembly time.

When you specify the RELEASE keyword, checking is done at assembly time. Compatibility between the list and execute forms of the RACROUTE REQUEST=DIRAUTH macro is validated at execution time if you specify the CHECK subparameter on the execute form of the macro.

The size of the list form expansion must be large enough to accommodate all parameters defined by the RELEASE keyword on the execute form of the macro. Otherwise, when CHECK processing is requested, the execute form of the macro is not done, and a return code of X'64' is returned.

The default is RELEASE=1.6.

,MF=(E,*ctrl addr***)**
specifies the execute form of the RACROUTE REQUEST=DIRAUTH macro instruction.

RACROUTE REQUEST=DIRAUTH (modify form)

The modify form of the RACROUTE REQUEST=DIRAUTH macro is written as follows. Refer to the Standard Form of the RACROUTE REQUEST=DIRAUTH macro to determine additional parameters that are required by the time the RACROUTE service is invoked using the Execute form of the macro.

name	*name*: Symbol. Begin *name* in column 1.
b	One or more blanks must precede RACROUTE.
RACROUTE	
b	One or more blanks must follow RACROUTE.

REQUEST=DIRAUTH

,MF=(M,*ctrl addr*) *ctrl addr*: Rx-type address or register (1) or (2) - (12)

The parameters are explained under the standard form of the RACROUTE REQUEST=DIRAUTH macro with the following exception:

,MF=(M,*ctrl addr*)
specifies the modify form of the RACROUTE REQUEST=DIRAUTH macro instruction.

RACROUTE REQUEST=EXTRACT: Replace or retrieve fields

The RACROUTE REQUEST=EXTRACT macro retrieves or replaces certain specified fields from a RACF profile, encodes certain clear-text (readable) data, or creates an ENVR object representing the security environment from an existing ACEE.

The RACROUTE REQUEST=EXTRACT macro supports an SRB-compatible branch entry when you specify BRANCH=YES and TYPE=ENCRYPT, BRANCH=YES and TYPE=EXTRACT, or TYPE=ENVRXTR. In addition, cross memory mode is supported for TYPE=ENVRXTR.

This macro is available only to authorized callers (APF-authority, system key 0–7, or supervisor state). Cross memory callers using TYPE=ENVRXTR must be in system key and supervisor state.

The caller cannot hold any locks when issuing RACROUTE REQUEST=EXTRACT.

When activated, automatic direction of application updates propagates RACROUTE REQUEST=EXTRACT ,TYPE=REPLACE requests on to selected remote nodes. Only RACROUTE REQUEST=EXTRACT ,TYPE=REPLACE requests with return code 0 are propagated.

Notes:

1. Encoding, replacement, and extraction are mutually exclusive.
2. The area returned by a RACROUTE REQUEST=EXTRACT or EXTRACTN request is located below 16MB.
3. Callers in cross-memory mode must be in primary ASC mode when they issue the RACROUTE request.
4. Logging of RACROUTE REQUEST=EXTRACT invocations is not done except indirectly. Logging can occur during field access checking if the RACROUTE REQUEST=AUTH request exit requests it. See “SMF Records” in *z/OS Security Server RACF Macros and Interfaces* for information about RACROUTE logging of Type 80 records.

For REQUEST=EXTRACT, **ONLY** the following functions are recommended programming interfaces:

- Retrieving or updating fields in any other product segment (including WORKATTR) in the user, group, and resource profiles
- Retrieving the following installation-reserved fields:
  – USERDATA

  - USRCNT
  - USRDATA
  - USRFLG
  - USRNM
- Retrieving the current or a specified user's default group or password.

The following two functions of RACROUTE REQUEST=EXTRACT are programming interfaces, but are not recommended:

- Retrieving or updating fields in the BASE segment of a user, resource, or group profile (see Note).
- Retrieving or updating data from the LANGUAGE segment (see Note).

Note

These interfaces are not recommended for use as a programming interface by IBM program products or by customer-written applications, because they might not be supported by security products other than RACF.

The following are the **recommended methods** for manipulating BASE and LANGUAGE segment data.

- For reading information, customers and customer programs should use:
  - Output from Database Unload (IRRDBU00), or
  - A relational database created from the IRRDBU00 output.
- For reading and updating information, customers and customer programs should use RACF commands to access data.

  If a customer program needs to manipulate database information in a manner not provided by RACF commands, the functions of RACROUTE REQUEST=EXTRACT, though not recommended, are preferred over ICHEINTY.

IBM program products should not use RACROUTE REQUEST=EXTRACT to retrieve or update fields by name when those fields are in the BASE segment.

To see the names of database fields that you can retrieve and update, refer to the database template listings in Appendix B, "RACF database templates" on page 355; these listings show the valid segment and field names, and the basic information content of the fields. It shows also what is and what is not part of the product interface.

RACROUTE REQUEST=EXTRACT (standard form)

The standard form of the RACROUTE REQUEST=EXTRACT macro is written as follows. For a description of additional keywords that you can code and additional parameters that are required on the RACROUTE request, but that are not specific to this request type, see "RACROUTE (standard form)" on page 13.

Note

RACROUTE REQUEST=EXTRACT requires an ACEE. For most applications, the system will have created an ACEE to represent the active user. However, for special cases where no ACEE exists, the invoker must create one before invoking RACROUTE REQUEST=EXTRACT.

The most common way to create an ACEE is to issue a RACROUTE REQUEST=VERIFY, specifying ENVIR=CREATE. After all RACROUTE invocations are complete, the invoker should issue RACROUTE REQUEST=VERIFY with ENVIR=DELETE specified, to delete the ACEE previously created.

Application programs must be structured so that a task requesting RACF services does not do so while other I/O initiated by the task is outstanding. If such I/O is required, the task should either wait for the other I/O to complete before requesting RACF services, or the other I/O should be initiated under a separate task. This is necessary to assure proper processing in recovery situations.

name	*name*: Symbol. Begin *name* in column 1.
b	One or more blanks must precede RACROUTE.
RACROUTE	
b	One or more blanks must follow RACROUTE.
REQUEST=EXTRACT	
,TYPE=EXTRACT ,TYPE=EXTRACTN ,TYPE=REPLACE ,TYPE=ENCRYPT ,TYPE=ENVRXTR	
,ACEE=*acee addr*	*acee addr*: A-type address or register (2) - (12)
,ENTITY=*profile name addr*	*profile name addr*: A-type address or register (2) - (12)
,ENTITYX=*extended profile name addr*	*extended profile name addr*: A-type address or register (2) - (12)
,FLDACC=YES ,FLDACC=NO	**Default:** FLDACC=NO
,GENERIC=ASIS	**Default:** GENERIC=ASIS

,GENERIC=YES	
,VOLSER=*vol addr*	*vol addr*: A-type address or register (2) - (12)
,MF=S	

If TYPE=EXTRACT or EXTRACTN is specified

,BRANCH=YES ,BRANCH=NO	**Default:** BRANCH=NO
,CLASS=*'class name'* ,CLASS=*class name addr*	*class name*: 1–8 character name *class name addr*: A-type address or register (2) - (12) **Default:** CLASS='USER'
,DATEFMT=YYYYDDDF ,DATEFMT=YYDDDF	**Default:** DATEFMT=YYDDDF
,DERIVE=YES	See explanation of keyword. **Default:** Normal processing
,FIELDS=*field addr*	*field addr*: A-type address or register (2) - (12)
,MATCHGN=YES ,MATCHGN=NO	**Default:** MATCHGN=NO
,SEGMENT=*'segment name'*	*segment name*: 1–8 character name
,SEGMENT=*segment name addr*	*segment name addr*: A-type address or register (2) - (12)
,SUBPOOL=*subpool number*	*subpool number*: Decimal digit 0–255 **Default:** See explanation of SUBPOOL keyword on page114.

If TYPE=REPLACE is specified:

,CLASS=*'class name'* ,CLASS=*class name addr*	*class name*: 1–8 character name *class name addr*: A-type address or register (2) - (12) **Default:** CLASS='USER'
,DATEFMT=YYYYDDDF ,DATEFMT=YYDDDF	**Default:** DATEFMT=YYDDDF
,FIELDS=*field addr*	*field addr*: A-type address or register (2) - (12)
,SEGDATA=*segment data addr*	*segment data addr*: A-type address or register (2) - (12)
,SEGMENT=*'segment name'*	*segment name*: 1–8 character name
,SEGMENT=*segment name addr*	*segment name addr*: A-type address or register (2) - (12)

If TYPE=ENCRYPT is specified:

,BRANCH=YES ,BRANCH=NO	**Default:** BRANCH=NO
,ENCRYPT=(*data addr*,DES) ,ENCRYPT=(*data addr*,HASH) ,ENCRYPT=(*data addr*,INST) ,ENCRYPT=(*data addr*,STDDES)	*data addr*: A-type address or register (2) - (12) **Note:** If TYPE=ENCRYPT is specified, the only other allowable parameters are ENTITY, ENTITYX, RELEASE, ENCRYPT, and BRANCH, with ENCRYPT being required.

If TYPE=ENVRXTR is specified:

,ENVROUT=*envr data addr*	*envr data addr*: A-type address or register (2) - (12) **Note:** When TYPE=ENVRXTR is specified, only the keywords ACEE and ENVROUT are recognized, with ENVROUT being required.

The parameters are explained as follows:

,ACEE=*acee addr*

specifies an alternate ACEE for RACF to use rather than the current ACEE. For example, for the USER class or for CLASS= not specified, if the ENTITY or ENTITYX parameter has not been specified, or ENTITYX has been specified with zero for the buffer length and zero for the actual entity name length, RACF refers to the ACEE during extract processing of user data.

If you want to use the ACEE parameter, you must specify RELEASE=1.8 or later.

For TYPE=ENVRXTR, if the caller is in cross-memory mode, the specified ACEE must reside in the HOME address space.

,BRANCH=YES
,BRANCH=NO

specifies whether you want RACF to use a branch entry.

The RACROUTE REQUEST=EXTRACT macro supports an SRB-compatible branch entry when you specify BRANCH=YES and TYPE=ENCRYPT or BRANCH=YES and TYPE=EXTRACT with no change in function.

- General resource profiles that can be brought into storage are candidates for branch entry EXTRACT.
  - You can use the SETROPTS RACLIST command or RACROUTE REQUEST=LIST, GLOBAL=YES command to create a global listing of profiles in a data space. You can use this list only in the address space it was issued from.

  - You can also use RACROUTE REQUEST=LIST, GLOBAL=NO to create a listing of profiles in the user's address space, but this does not create a global listing of profiles.
- User data that is defaulted from the ACEE is a candidate for branch entry EXTRACT. This occurs when the USER class is specified or CLASS= is not specified, no ENTITY or ENTITYX is specified or ENTITYX is specified with zero for buffer length and zero for the actual entity name length, and no SEGMENT or FIELDS information is specified. The user's ID and default connect group are extracted from the current ACEE.

  If the user's primary and secondary languages are available, they are also extracted from the current ACEE, along with a code (U) indicating that the reported languages are defined in the user's profile. If the user's primary and secondary languages are not available in the user's profile, the installation default primary and secondary languages set by SETROPTS are returned, along with a code (S) indicating that the reported languages are the installation default.

  Additionally, if the user's work attributes (WORKATTR) information is available, it is also extracted from the ACEE. For the format of the WORKATTR information returned from the ACEE, see "RXTW: RACROUTE REQUEST=EXTRACT Result Area Mapping" in *z/OS Security Server RACF Data Areas*.
- RACF can extract the following fields of the general-resource profile:

  NOT programming interface information

  CATEGORY, MEMCNT, MEMLST, and NUMCTGY

  End of NOT programming interface information

  UACC, AUDIT, LEVEL, GAUDIT, OWNER, INSTDATA, APPLDATA, SECLEVEL, LOGDAYS, LOGTIME, LOGZONE, NOTIFY, ACLCNT, USERID, USERACS, SECLABEL, SESSKEY, SLSFLAGS, KEYDATE, KEYINTVL, CONVSEC, ACL2CNT, ACL2, ACL2NAME, ACL2UID, ACL2ACC, ACL2RSVD.
- RACF searches RACLISTed profiles in the following order:
  - Those off the ACEE (if ACEE is specified),
  - Those off the TCB ACEE,
  - Those off the ASXB ACEE, and
  - If the profile is not found off any ACEE, RACF searches globally RACLISTed profiles.

To specify the BRANCH keyword, you must specify Release=1.9 or later.

,CLASS=*'class name'*
,CLASS=*class name addr*
specifies the class the entity is in. The class name can be USER, GROUP, CONNECT, DATASET, or any general-resource class defined in the class-descriptor table.

If you specify CLASS, you must specify RELEASE=1.8 or later.

,DATEFMT=YYYYDDDF
,DATEFMT=YYDDDF
specifies the format of the date that you want to extract or replace. If you specify DATEFMT=YYYYDDDF and TYPE=EXTRACT or EXTRACTN, RACF retrieves date fields in the format *ccyyddd*F where *cc*=19 or *cc*=20, unless the

date being retrieved is in an uninitialized state in the RACF database, in which caseX'0000000F' or X'FFFFFFFF' is returned. If TYPE=REPLACE is specified, RACF accepts dates in the format *ccyyddd*F where *cc*=19 or *cc*=20. When accepting a date as input to put into the database, RACF validates that *cc*=19 or *cc*=20, and that for

```
cc=19, 70 <  yy <= 99
```

and for

```
cc=20, 00 <= yy <= 70.
```

If you specify DATEFMT=YYDDDF, RACF retrieves and accepts dates in the normal three byte format.

To specify the DATEFMT keyword, you must specify Release=1.9.2 or a later release number.

,DERIVE=YES

specifies that the desired field be obtained from the DFP segment of the appropriate profile. To specify DERIVE, you must also specify RELEASE=1.8.1 or later.

DERIVE requests are limited to the DFP segment of the DATASET and USER profiles. The following explains the DERIVE processing for both a DATASET and a USER request:

- DATASET

  Specifying the DERIVE=YES keyword with CLASS=DATASET and FIELDS=RESOWNER causes RACF to perform additional processing other than simply extracting the data set resource owner from the data set profile.

  DFP uses this retrieved information for authority checking when allocating a new data set.

  To process the request, RACF first attempts to extract the RESOWNER field from the DATASET profile specified by the ENTITY or ENTITYX keyword. If the profile exists and the RESOWNER field contains data, RACF checks to see whether that data is the user ID of a user or group currently defined to RACF. If so, RACF returns that user ID along with a reason code that indicates whether the user ID is that of a user or a group.

  If RACF does not find a profile that matches the DATASET name specified by the ENTITY or ENTITYX keyword, RACF attempts to locate the generic DATASET profile that protects that DATASET name.

  If it finds the generic profile, and the RESOWNER field contains data, RACF checks to see whether that data is the user ID of a user or a group currently defined to RACF. If so, RACF returns that user ID along with a reason code that indicates whether the user ID is that of a user or a group.

  If RACF does not find a generic profile, or the retrieved data is neither a user or group, RACF returns the high-level qualifier from the name specified on the ENTITY or ENTITYX keyword along with a reason code that indicates whether that high-level qualifier matches a defined user or group, or neither.

  You specify a DERIVE request for RESOWNER as follows:

```
RACROUTE REQUEST=EXTRACT,TYPE=EXTRACT,                          X
ENTITY=DSNAME,                                                  X
VOLSER=MYDASD,                                                  X
CLASS='DATASET',                                                X
FIELDS=RESFLDS,                                                 X
SEGMENT='DFP',                                                  X
DERIVE=YES,                                                     X
WORKA=RACWK,                                                    X
```

```
RELEASE=1.8.1
..........
DSNAME   DC CL44'USER1.DATASET'
MYDASD   DC CL6'DASD1'
RESFLDS  DC A(1)
         DC CL8'RESOWNER'
RACWK    DC CL512
```

Note: You must specify all the keywords in the example for the DERIVE request to work.

- USER

  The purpose of specifying the DERIVE=YES keyword with CLASS=USER is to obtain the desired DFP field information (STORCLAS, MGMTCLAS, DATACLAS or DATAAPPL) from the profile of the user. If the user's profile does not contain the desired DFP fields, RACF goes to the user's default group and attempts to obtain the information for the remaining fields from the GROUP profile (the remaining fields being those that do not contain information in the USER profile).

  You specify a DERIVE request for information from a USER profile as follows:

```
RACROUTE REQUEST=EXTRACT,TYPE=EXTRACT,                          X
ENTITY=USER01,                                                  X
CLASS='USER',                                                   X
FIELDS=STRFLDS,                                                 X
SEGMENT='DFP',                                                  X
DERIVE=YES,                                                     X
WORKA=RACWK,                                                    X
RELEASE=1.8.1
.........
USER01   DC CL8'USER01'
STRFLDS  DC A(1)
         DC CL8'STORCLAS'
RACWK    DC CL512
```

RACF processes the DERIVE keyword if it is specified with the DATASET or USER class. In addition, for DERIVE processing to occur, SEGMENT=DFP and RELEASE=1.8.1 or later must also be specified.

,ENCRYPT=(*data addr***,DES)**
,ENCRYPT=(*data addr***,HASH)**
,ENCRYPT=(*data addr***,INST)**
,ENCRYPT=(*data addr***,STDDES)**

specifies the user-authentication key and authentication method.

Note: If the password was shipped from another system, the encryption method must be the same on all systems utilizing the password. For example, the RACF password authentication exits, ICHDEX01 and ICHDEX11, must be identical on all systems.

Specifying zero for the 1-byte length associated with the user-authentication key has the same effect as not specifying the keyword. Upon return to the caller, the first subparameter contains the address of an area that contains a 1-byte length followed by the product of the authentication process. Neither the address itself nor the length is changed. Also, data is one-way transposed; that is, no facility is provided to recover the data in readable form.

- ,ENCRYPT=(*data addr,DES*)

  Specifies the user-authentication key and the National Bureau of Standards Data Encryption Standard (DES) encryption method. The address points to a

1-byte length followed by from 1 to 255 bytes of text to be used as the key for encryption. The second subparameter specifies the RACFDES algorithm (RACF's variation of DES). When the DES algorithm is used, RACF uses the variable-length user-authentication key to encrypt eight bytes of clear-text data pointed to by the ENTITY or ENTITYX parameter, or by the user ID from the current ACEE (if no ENTITY or ENTITYX is specified or if ENTITYX is specified with zero for the buffer length and zero for the actual entity-name length).

RACF uses the first eight bytes of clear-text data pointed to by the ENTITY or ENTITYX parameter, or the user ID specified in the ACEE. All other text is ignored.

- ,ENCRYPT=(*data addr,HASH*)

  Specifies the user-authentication key and the RACF hashing algorithm. The address points to a 1-byte length followed by from 1 to 255 bytes of text to be used as the user-authentication key. The second subparameter specifies the RACF hashing algorithm. When this hashing algorithm is used, the user-authentication key is masked instead of encrypted.

- ,ENCRYPT=(*data addr,INST*)

  Specifies the user-authentication key and the INST authentication method. The address points to a 1-byte length followed by from 1 to 255 bytes of text to be used as the key for authentication. The second subparameter specifies whatever scheme the installation is using (INST value). When the INST algorithm is used, RACF passes to the installation-defined algorithm the variable-length user-authentication key and the eight bytes of clear-text data pointed to by the ENTITY or ENTITYX parameter, or by the user ID from the current ACEE (if no ENTITY or ENTITYX is specified or if ENTITYX is specified with zero for the buffer length and zero for the actual entity-name length).

  If there is no installation-defined authentication method present, RACF uses the DES encryption method. RACF uses the first eight bytes of clear-text data pointed to by the ENTITY or ENTITYX parameter, or the user ID specified in the ACEE. All other text is ignored.

- ,ENCRYPT=(*data addr,STDDES*)

  Specifies the user-authentication key and the STDDES authentication method. The address points to a 1-byte length followed by eight bytes of text to be used as the key for authentication. The second subparameter specifies the NBS DES algorithm. When the STDDES algorithm is used, RACF uses the 8-byte user authentication key to encrypt eight bytes of clear-text data pointed to by the ENTITY or ENTITYX parameter, or the user ID from the current ACEE if no ENTITY or ENTITYX is specified or if ENTITYX is specified with zero for the buffer length and zero for the actual entity-name length.

  The authentication key must be eight bytes in length. Any other length for the key results in a parameter-list error. RACF uses the first eight bytes of clear-text data pointed to by the ENTITY or ENTITYX parameter, or the user ID specified in the ACEE. All other text is ignored.

,ENTITY=*profile name addr*
,ENTITYX=*extended profile name addr*

specifies the address:

- ,ENTITY=*profile name addr*

  For Release 1.7 or earlier (limited to USER), specifies the address of an area eight bytes long that contains the resource name (user ID for CLASS=USER) for which profile data is to be extracted, or the user ID to be

used when encoding. The name must be left-justified in the field and padded with blanks. If this parameter is not specified, a default value of zero indicates that RACF should use the user ID provided in the ACEE operand. If CLASS=USER is coded, information from the ACEE control block is returned in the result area.

For Release 1.8 and later, specifies the address of a resource name for which profile data is to be extracted or replaced for TYPE=EXTRACT, or REPLACE, or the clear-text data to be processed for TYPE=ENCRYPT. The area is 8 bytes long for USER and GROUP, 17 bytes long for CLASS=CONNECT, and 44 bytes long for DATASET. The lengths of all other profile names are determined by the class-descriptor table. The name must be left-justified in the field and padded with blanks. If this parameter is not specified, a default value of zero indicates that RACF should use the user ID provided in the ACEE operand. If CLASS=USER is coded, information from the ACEE control block is returned in the result area.

Note: When you specify MATCHGN=YES, if your RACF installation is not using the restructured-database format and the length of an entity name for a general-resource class is longer than 39 characters, RACF uses generic profiles to match the name.

- ,ENTITYX=*extended profile name addr* specifies the address of a structure that consists of two 2-byte length fields, followed by the entity name.
  - The first 2-byte field specifies a buffer length that can be from 0 to 255 bytes. This length field refers to the length of the buffer that contains the entity name; it does not include the length of either length field.
  - The second 2-byte field specifies the actual length of the entity name. This length field includes the length of the actual name without any trailing blanks; it does not include the length of either length field.

  These two length fields can be used in several different ways:
  - If you know the length of the entity name, you can specify 0 in the first field and the length of the entity name in the second field. When you specify the second field, note that each byte counts. This means the entity name that you specify must match exactly the entity name on the RACF database.
  - If you choose to place the entity name in a buffer area, specify the length of the buffer in the first field. For the second field, do one of the following:
    - If you know the length of the entity name, specify the length in the second field. The length of the first field can be from 0–255 bytes, but *must* be equal to or greater than the length of the second field.
    - If you do not know the length of the entity name, specify 0 in the second field, and have RACF determine the number of characters in the entity name.

  If this parameter is not specified or is specified in one of the following formats, a default value of zero indicates that RACF should use the user ID from the current ACEE. These are the only two situations in which specifying zero for the buffer length and zero for the actual entity-name length does not result in a parameter-list error.
  - Zero is specified for the buffer length and zero is specified for the actual entity-name length for TYPE=ENCRYPT.
  - Zero is specified for the buffer length and zero is specified for the actual entity-name length for TYPE=EXTRACT with USER being specified for the class or CLASS= being unspecified.

Notes:

1. When you specify MATCHGN=YES, if your RACF installation is not using the restructured-database format and the length of an entity name for a general-resource class is longer than 39 characters, RACF uses generic profiles to match the name.
2. Programs using RACROUTE REQUEST=EXTRACT and ENTITY=, and either TYPE=EXTRACTN or TYPE=EXTRACT (with MATCHGN=YES) with an ENTITY buffer shorter than the class's MAXLENX value, might experience unpredictable results if the programs retrieve a profile name longer than the class's MAXLNTH value that does not fit within the buffer. Errors might include immediate 0C4 abends due to overlays of program storage. (MAXLNTH and MAXLENX are operands on the ICHERCDE macro. See *z/OS Security Server RACF Macros and Interfaces* for further information on the ICHERCDE macro.)

Recommendation: Use ENTITYX rather than ENTITY. With ENTITY, the entity name you pass to RACF must be in a buffer, the size of which is determined by the length in the RACF class-descriptor table. If the maximum length of a class-descriptor entity increases in the future, you must modify your program to use a larger buffer. By using ENTITYX, you avoid this possible problem because you removed the class descriptor table dependency from your program.

,ENVROUT=*envr data addr*

specifies the data structure that is to hold the information used to describe a security environment. This information can be used later on a service with the ENVRIN keyword such as RACROUTE REQUEST=VERIFY to recreate the security environment without causing I/O to the RACF Database. The address points to a data structure defined in Table 4 on page 110. The data structure describes the storage location for the ENVR object. The ENVR object extracted from the ACEE includes the X500 name and USP if they exist. While the format of the data structure pointed to by ENVROUT is known to the RACROUTE invokers, the content of the object itself is defined by the external security product.

This keyword is only recognized when TYPE=ENVRXTR is specified. To use this keyword, RELEASE=2.6 or later must also be specified.

Figure 3 on page 110 and Table 4 on page 110 represent the ENVR data structure for use with the ENVROUT keyword. The data structure must start on a fullword boundary.

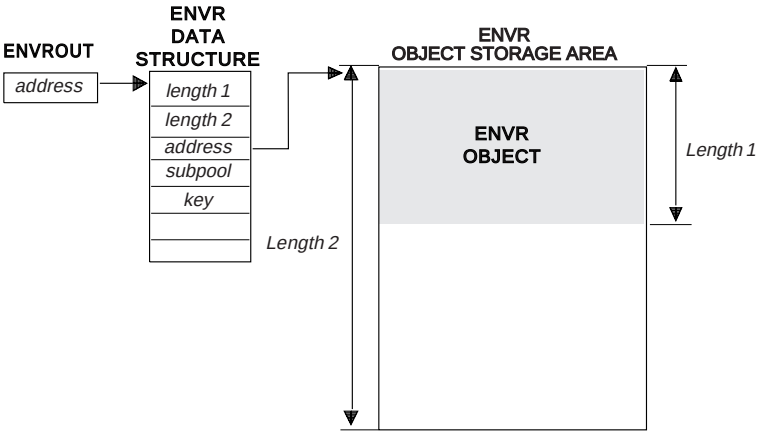

Figure 3. ENVR Data Structure

Table 4. Description of ENVR Data Structure

Description	Length (Bytes)	ENVROUT Usage
ENVR Object Length	4	Output
ENVR Object Storage Area Length	4	Input/Output
ENVR Object Storage Area Address	4	Input/Output
ENVR Object Storage Area Subpool	1	Input
ENVR Object Storage Area Key	1	Input

The ENVR object storage area can be supplied by the caller or obtained by RACF. If supplied by the caller, it must be on a doubleword boundary and be associated with the job step task. If RACF obtains the storage area, it is on a doubleword boundary and is associated with the Job Step task. The storage is allocated based on the mode of the caller (LOC=ANY for 31-bit callers and LOC=BELOW for 24-bit callers). The following table shows how the field values affect ENVROUT processing.

Table 5. ENVROUT Storage Area Processing

ENVR Object Storage Area Length	ENVR Object Storage Area Address	Result
Zero	Any Value	RACF obtains minimum storage size needed to contain the ENVR Object. Storage size is returned in the ENVR Object storage area length. Storage address is returned in the ENVR Object storage area address.
Nonzero	Zero	RACF obtains storage size specified or the minimum storage size needed to contain the ENVR Object. Storage size is returned in the ENVR Object storage area length. Storage address is returned in the ENVR Object storage area address.

Table 5. ENVROUT Storage Area Processing (continued)

ENVR Object Storage Area Length	ENVR Object Storage Area Address	Result
Nonzero	Nonzero	RACF attempts to use the storage area provided. If the area is too small to contain the ENVR object, RACF frees the storage area provided and obtains the minimum storage size needed to contain the ENVR object. Storage size is returned in the ENVR object storage area length. Storage address is returned in the ENVR object storage area address.

Storage is obtained and freed in the subpool and key specified in the ENVR data structure.

Since the ENVR object length is returned to the caller, the ENVR object can be moved from one storage area to another. This value is supplied as an output to the caller. RACF does not attempt to use this value in either ENVROUT or ENVRIN processing.

The caller is responsible for freeing the ENVR object storage area when it is no longer needed. The length, address, subpool, and key to be used when doing the FREEMAIN are contained in the ENVR data structure.

The ENVR object returned by ENVROUT= is a relocatable object that can be copied from one storage location to another. The returned ENVR object, or a copy of the returned ENVR object, can be specified as input to the RACROUTE interface using the ENVRIN keyword, or to the initACEE callable service using the ENVR_in parameter.

The ENVR object can be passed to other systems, but this should be done with great care. The ENVR object should not be saved for a long period of time before being used as ENVRIN, and it should not be passed to systems that have different security information. The other systems should share the RACF database and have compatible RACF installation exits and class descriptor tables.

,FIELDS=*field addr*

specifies the address of a variable-length list. The first field is a 4-byte field that contains the number of profile field names in the list that follows.

Specifying zero for this 4-byte field has the same effect as not specifying the keyword.

Each profile field name is eight bytes long, left-justified, and padded to the right with blanks. The allowable field names for each type of profile are in the template listings in Appendix B, “RACF database templates”. For an illustration of how to specify the FIELDS keyword, see the TYPE=REPLACE example on 112.

For Release=1.8 or later, the following options exist:

- The count field can contain numbers from 1 through 255.
- The field names can be any of the field names in the template listings, unless BRANCH=YES is specified.

REQUEST=EXTRACT

If you specify TYPE=EXTRACT or EXTRACTN, RACF retrieves the contents of the named fields from the RACF profile indicated by the CLASS= and ENTITY= or ENTITYX= parameters, and returns the contents in the result area. (See the EXTRACT keyword for an explanation of the result area.)

Beginning with Release 1.8, you can specify TYPE=REPLACE. RACF replaces or creates the indicated fields in the profile specified on the CLASS and ENTITY or ENTITYX keywords with the data pointed to by the SEGDATA keyword.

Notes:

1. Do not replace a repeat group-count field. Doing so causes unpredictable results.
2. You cannot replace an entire repeat group, a single occurrence of a repeat group, or a single existing field in a repeat group. If you attempt to do so, RACF adds the data to the existing repeat group or groups.

   The only things you can do is retrieve all occurrences of specified fields within a repeat group, or add a new occurrence of a repeat group.
3. If you add occurrences of a repeat group, RACF places those additions at the beginning of the repeat group.

The following example of TYPE=REPLACE replaces fields in the BASE segment. It shows one way to code the macro and the declarations necessary to make the macro work.

```
RACROUTE REQUEST=EXTRACT,TYPE=REPLACE,                        X
         CLASS='USER',                                        X
         ENTITY=USERID,                                       X
         FIELDS=FLDLIST,                                      X
         SEGDATA=SEGDLIST,                                    X
         SEGMENT=BASE,                                        X
         WORKA=RACWK

 ...............................

 USERID   DC  CL8,'BILL'
 FLDLIST  DC  A(3)
          DC  CL8'AUTHOR'
          DC  CL8'DFLTGRP'
          DC  CL8'NAME'
 SEGDLIST DC  AL4(6),CL6'DJONES'
          DC  AL4(8),CL8'SECURITY'
          DC  AL4(11),CL11'BILL THOMAS'
 BASE     DC  CL8'BASE'
 RACWK    DC  CL512
```

When the replacement action takes place, the following occurs:

- “DJONES” is placed in the AUTHOR field in the profile.
- “SECURITY” is placed in the DFLTGRP field in the profile.
- “BILL THOMAS” is placed in the ‘NAME’ field in the profile.

In this example, RACROUTE REQUEST=EXTRACT retrieves the UACC from a fully qualified, generic data set profile. RACROUTE places the information in a work area in SUBPOOL 1.

```
RACROUTE REQUEST=EXTRACT,TYPE=EXTRACT,                        X
         VOLSER=VOLID                                         X
         CLASS='DATASET',                                     X
         ENTITY=DSN,                                          X
         FIELDS=FLDS,                                         X
         GENERIC=YES,                                         X
```

```
          SUBPOOL=1,                                            X
          RELEASE=1.8,                                          X
          SEGMENT='TSO',                                        X
          WORKA=RACWK
  ......

 DSN   DC CL44'SYS1.LINKLIB'
 FLDS  DC A(1)
       DC CL8 'UACC'
 RACWK DC CL512
```

,FLDACC=NO
,FLDACC=YES

specifies whether field-level access checking should be performed.

If you specify FLDACC=YES, the RACF database manager checks to see that the user running your program has the authority to extract or modify the fields specified in the RACROUTE REQUEST=EXTRACT macro.

Notes:

1. FLDACC=YES is ignored if BRANCH=YES is specified.
2. For field-level access checking to occur, you must specify RELEASE =1.8 or later when you code the macro. In addition, before the program executes, the security administrator must activate and RACLIST the FIELD class using the SETROPTS command. If you code FLDACC=YES and the FIELD class is not active and RACLISTed, the request is failed with a return code 8, reason code 4.
3. In addition, the security administrator must issue the RDEFINE and PERMIT commands to designate those users who have the authority to access the fields designated in the RACROUTE REQUEST=EXTRACT macro.
4. If you specify FLDACC=NO or omit the parameter, the manager ignores field-level access checking.

,GENERIC=ASIS
,GENERIC=YES

specifies whether RACF is to treat the entity name as a generic profile name.

YES RACF considers the entity name a generic profile name, even if it does not contain any of the generic characters. Characters considered generic are:

For data set class:
- Asterisk (*)
- Percent (%)

For general resource class:
- Asterisk (*)
- Percent (%)
- Ampersand (&)

ASIS RACF considers the entity name a generic profile name if it contains:

For data set class:
- Asterisk (*)
- Percent (%)

For general resource class:
- Asterisk (*)
- Percent (%),
- Ampersand (&).

Note: A profile in the RACFVARS class is not considered to be a generic profile even though it contains an ampersand sign.

If you specify GENERIC, you must specify RELEASE=1.8 or later.

Note: If generics have not been enabled for the class, EXTRACT and EXTRACTN do not find generic profiles.

,MATCHGN=YES
,MATCHGN=NO
specifies that you want to extract data from a profile that matches or covers the resource name specified on the ENTITY or ENTITYX keyword.

If you specify MATCHGN=YES, RACF extracts data from the discrete profile, if one exists; if a discrete profile does not exist, RACF extracts data from the best-matching generic profile. If a best-matching generic profile is found, that profile name is returned to the caller in the ENTITY or ENTITYX location.

If ENTITYX is specified, the length of the best-matching profile name is also returned in the 2-byte, actual entity-name-length location. If the buffer length is less than the length of the best-matching profile, you get a return and reason code indicating that the profile was not found because the buffer length specified is too small.

If you specify MATCHGN=NO, RACF extracts data from a profile (discrete or generic) that **exactly** matches the name specified on the ENTITY or ENTITYX keyword.

To specify the MATCHGN keyword, you must specify Release=1.9 or a later release number.

,SEGDATA=*segment data addr*
specifies the address of a list of data items to be placed in the respective fields named by the FIELDS= parameter. You use the SEGDATA parameter when you specify TYPE=REPLACE. If you specify SEGDATA, you must also specify CLASS, FIELDS, and RELEASE=1.8 or a later release number. The stored data is paired in the following format:
- A 4-byte length field that contains the length of the data field that follows
- A data field of variable length.

Specifying zero for the length field causes the field being replaced to be removed from the segment. Each length field is followed immediately by a data field, until the end of the replacement data is reached. The count field, which is pointed to by the first field in the FIELDS parameter, contains the total number of length-data pairs.

,SEGMENT=*'segment name'*
,SEGMENT=*segment name addr*
specifies the RACF profile segment that RACF is to update or from which it is to extract data. If you allow the SEGMENT parameter to default, RACF assumes that you want to extract information from the base segment.

Each segment name is eight bytes long, left justified, and padded to the right with blanks. SEGMENT is not preceded by a 4-byte length field.

If you specify SEGMENT, you must also specify the CLASS and FIELDS keywords, and RELEASE=1.8 or a later release number.

,SUBPOOL=*subpool number*
specifies the storage subpool from which the extract-function routine obtains an area needed for the extraction.

Notes:

1. If this parameter is not specified, it defaults to 229.

Take some care in selecting a subpool, as MVS makes certain assumptions about subpool usage and characteristics. In particular, using subpool 0 or 250, or any subpool documented in *z/OS MVS Programming: Assembler Services Guide* as having a storage key of USER (for example, 227–231 and 241) might give unpredictable results.

2. If a common-area subpool (for example 226–228, 231, 239, 241, 245, 247, or 248) is used and not freed before the job terminates, then the job might show up in the exception reports of RMF (or other monitoring tools that support the tracking of common-area storage utilization) as owning common storage. Before your job terminates, it should issue a FREEMAIN to free this common storage.

,TYPE=ENCRYPT
,TYPE=ENVRXTR
,TYPE=EXTRACT
,TYPE=EXTRACTN
,TYPE=REPLACE

specifies the type of function to be performed by the extract-function routine.

ENCRYPT

allows RACF to provide an authentication token to be used in verifying a user's identity. The ENCRYPT keyword specifies the user-authentication key to be used for authentication, and the authentication method. The first eight bytes of the area pointed to by the ENTITY or ENTITYX operand are used as the clear-text data to be processed by the INST, DES, and STDDES authentication routines. The HASH method uses the user-authentication key as clear-text data and masks the data instead of encrypting it. If ENTITY or ENTITYX is not specified, or ENTITYX is specified with zero for the buffer length and zero for the actual entity-name length, the user ID from the current ACEE is used as the clear-text data. If TYPE=ENCRYPT is specified, no work area is returned.

ENVRXTR

extracts an ENVR object from the specified ACEE. The ENVR object is returned using the ENVROUT keyword. TYPE=ENVRXTR can be invoked in cross-memory mode to extract an ENVR object in the primary address space from an ACEE in the HOME address space.

The ENVR object returned by ENVROUT= is a relocatable object that can be copied from one storage location to another. The returned ENVR object, or a copy of the returned ENVR object, can be specified as input to the RACROUTE interface using the ENVRIN keyword, or to the initACEE callable service using the ENVR_in parameter.

The ENVR object can be passed to other systems, but this should be done with great care. The ENVR object should not be saved for a long period of time before being used as ENVRIN, and it should not be passed to systems that have different security information. The other systems should share the RACF database and have compatible RACF installation exits and class descriptor tables.

Notes:

1. When TYPE=ENVRXTR is specified, only the keywords ACEE and ENVROUT are recognized, with ENVROUT being required.
2. RELEASE = 2.6 or later must be also specified
3. This service is always invoked as a branch entered service, and the BRANCH= keyword is ignored.

4. The issuer must be APF authorized, system key (0–7), or in supervisor state unless in cross memory mode. In cross memory mode, the caller must be system key (0–7) and in supervisor state.
5. This service is always be invoked with DECOUPL=YES. The setting of the DECOUPL= parameter is ignored.

EXTRACT

Extract information from any field in any profile, unless BRANCH=YES is specified.

The profile templates in Appendix B, “RACF database templates” on page 355 define the type and name of each field in each profile. If you specify EXTRACT, RACF extracts information from the profile determined by the ENTITY or ENTITYX and CLASS keywords.

Specifically, RACF extracts (from the RACF database) the fields specified in the FIELDS keyword from the segment specified by the SEGMENT keyword.

Otherwise, you can obtain the default user-class information from the current user’s profile (the specified or default ACEE) if you do the following:

- Specify the USER class or do not specify the CLASS= keyword.
- Do not specify the SEGMENT and FIELDS keywords.
- Do not specify the ENTITY or ENTITYX keyword, or specify ENTITYX with zero for the buffer length and zero for the actual entity-name length.

An installation that is processing selected or all users in the USER class by coding RACROUTE REQUEST=EXTRACT,TYPE=EXTRACTN (where the starting profile is a value less than X'C1') might find that this code returns one of the `irrcerta`, `irrmulti`, and `irrsitec` user IDs, which are the user IDs associated with digital certificates. These user IDs are not valid user IDs and do *not* represent real users. Because they do not contain a default group, they cannot be used for RACROUTE REQUEST=VERIFY processing, nor can they be used on a third-party RACROUTE REQUEST=AUTH. As a result, an installation might want to ignore these user IDs in its code.

When the default information is taken from the current user’s profile (the specified or default ACEE), there is no I/O to the RACF database, and the user’s ID and default connect group are extracted from the current ACEE. This also results in returning the language information as follows:

- If the user’s primary and secondary languages are available, they are extracted from the current ACEE, along with a code indicating that the reported languages are defined in the user’s profile.
- If the user’s primary and secondary languages are not available in the user’s profile, the installation default primary and secondary languages set by SETROPTS are returned, along with a code indicating that the reported languages are the installation default.

Additionally, if the user’s work attributes (WORKATTR) information is available, it is also extracted from the ACEE. For the format of the

WORKATTR information returned from the ACEE, See “RXTW: RACROUTE REQUEST=EXTRACT Result Area Mapping” in *z/OS Security Server RACF Data Areas*.

To use TYPE=EXTRACT to extract field information from a profile, you must specify RELEASE=1.8 or a later release number.

Note: If you specify TYPE=EXTRACT, do not specify ENCRYPT.

Upon return, register 1 contains the address of a result area that begins with a fullword containing the length and subpool number of the area. EXTWOFF is used as the offset from EXTWKEA to locate the start of the optional returned fields. See “RXTW: RACROUTE REQUEST=EXTRACT Result Area Mapping” in *z/OS Security Server RACF Data Areas* for the mapping of this area. It is your responsibility to issue a FREEMAIN to release the area after you are through using it. See the description of the SUBPOOL keyword.

There are certain conditions under which register 1 can contain a non-zero value that is not a pointer to a result area.

R15 value	SAFPRRET	SAFPRREA
4	0	anything
4	4	0
anything	anything	

You need to initialize the parameter lists such that SAFPRRET and SAFPRREA start out as 0 in order to distinguish these cases.

In general, RACF returns field data in the order it was specified, with a 4-byte length field preceding each profile field. The following lists show what is returned for different types of extractions:

- For a single field, you get:
  - A 4-byte length field that contains the length of the field that follows, or
  - If the requested field is a variable-length field, there is no additional length byte.
  -

4 bytes (length of data)	data

- For a combination field (representing one or more fields), you receive:
  - A 4-byte length field that contains the combined length of all the fields that follow, or
  - A combination field made up of 4-byte length fields followed by their respective individual data fields.

–

Total length of combination field	
4 bytes (length of data1)	data1
4 bytes (length of data2)	data2

- For a single field within a repeat group, you receive:
  - A 4-byte length field that contains the combined length of all the fields that follow, or
  - A 4-byte length field that indicates the length of the specified field in the first occurrence of the repeat group. This is followed by a 4-byte length field that indicates the length of the specified field in the second occurrence of the repeat group. This order repeats until all the occurrences of the repeat group are accounted for.
  –

Total length of all the following fields	
4 bytes (length of data1)	data1
4 bytes (length of data1)	data1

- For a combination field (representing one or more fields) within a repeat group, you receive:
  - A 4-byte length field that contains the combined length of all the fields that follow, or
  - A combination field consisting of a 4-byte length field indicating the length of the individual data field that follows it, followed by the next 4-byte length field indicating the length of the next individual data field. This order repeats until all the individual fields that make up the combination field are accounted for. The order begins again for the next occurrence of the repeat group.

Total length of all the occurrences of the combination field in the repeat group.	
4 bytes (length of data1)	data1
4 bytes (length of data2)	data2
4 bytes (length of data1)	data1
4 bytes (length of data2)	data2

- When you specify the name of a repeat-group count field, you retrieve the 4-byte length followed by the 4-byte repeat group count.

  When a field to be extracted is empty, the following results:
  - For fixed length fields, RACF returns the default as specified by the template definitions. The default for flag fields is X'00'. The default for fixed-length fields in the BASE segment of the profile is binary 1(s). The default for fixed length fields in other segments is binary zeros.

– For variable-length fields, RACF returns a length of zero and no data.

EXTRACTN

specifies that upon return, register 1 contains the address of a result area that begins with a fullword containing the area's subpool number and length. To see the format of the result area, see the explanation of TYPE=EXTRACT, above and "RXTW: RACROUTE REQUEST=EXTRACT Result Area Mapping" in *z/OS Security Server RACF Data Areas*. At offset 6 in the result area, there is a flag. If the flag has a X'80', the name returned is generic.

If you specify EXTRACTN, the macro extracts information from the profile that follows the profile determined by the ENTITY or ENTITYX and CLASS keywords. From that next profile, RACF extracts the fields specified in the FIELDS keyword from the segment specified by the SEGMENT keyword. In addition, RACF returns the name of the profile from which it extracted the data.

Notes:

1. If you specify TYPE=EXTRACTN, do not specify ENCRYPT=.
2. To retrieve all profiles within a class, the database must be processed twice, once to extract all discrete profiles and once again to extract all generic profiles (see "Example 3" on page 125). In exception, the DATASET class needs to be processed only once to extract all discrete and generic profiles. (See "Example 4" on page 128.)

REPLACE

Use of the REPLACE option to update a profile requires a thorough knowledge of the interrelationships of fields within a profile, and of the potential relationships between profiles. For instance, if you use RACROUTE REQUEST=EXTRACT to update a password, you should also update the password change date. However, since you cannot update the password history, subsequent password changes (by PASSWORD or TSO LOGON, for example) could allow the old password to be used again.

If you specify TYPE=REPLACE, RACF takes the information in the fields specified in the FIELDS parameter and pointed to by SEGDATA, and places that information in the designated segment. (The segment is within the profile determined by the ENTITY or ENTITYX and CLASS keywords.) If you specify TYPE=REPLACE, you must specify FIELDS, SEGDATA=, and RELEASE=1.8 or later. If you want to replace a segment other than the base segment, you must specify the SEGMENT keyword with the segment you want. If you do not specify SEGMENT, the segment defaults to the base segment.

With Release 1.8 and later, if you want to create a TSO segment, you can do so by specifying the RACROUTE REQUEST=EXTRACT macro in the following way:

```
TYPE=REPLACE  SEGMENT=TSO
```

Note: If you specify TYPE=REPLACE, do not specify ENCRYPT=.

,VOLSER=*volser addr*

specifies the volume serial number as follows:

- For non-VSAM DASD data sets and for tape data sets, this specifies the volume serial number of the volume on which the data set resides.

- For VSAM DASD data sets and tape data sets, this specifies the volume serial number of the catalog controlling the data set.

The field pointed to by the VOLSER address contains the volume serial number. If necessary, you must pad it to the right with blanks so it contains six characters.

If you specify VOLSER, you must specify RELEASE=1.8 or later.

VOLSER is valid with CLASS=DATASET.

,MF=S
specifies the standard form of the RACROUTE REQUEST=EXTRACT macro instruction.

Return codes and reason codes

When you execute the macro, space for the RACF return code and reason code is reserved in the first two words of the RACROUTE parameter list. You can access them using the ICHSAFP mapping macro, by loading the ICHSAFP pointer with the label that you specified on the list form of the macro. When control is returned, register 15 contains the SAF return code.

Note to Reader
All return and reason codes are shown in hexadecimal. Also, please note that SAF return code is presented as SAF RC and RACF return code is presented as RACF RC in the following section.

SAF RC	Meaning
00	RACROUTE REQUEST=EXTRACT has completed successfully.

RACF RC	Meaning
00	The extraction, replacement, or encoding completed successfully.

Reason Code	Meaning
For DERIVE requests:	
00	Some of the values are derived from the USER profile, and some might be derived from the GROUP profile.
04	High-level qualifier returned as RESOWNER, which matched a valid USER.
08	DFP data returned from an EXTRACT request from USER profile was actually from the user's default connect group.
0C	High-level qualifier returned as RESOWNER, which matched a valid GROUP.

24	RESOWNER field matched a valid USER.
28	RESOWNER field matched a valid GROUP.
2C	At least one, but not all, of the fields requested failed to be retrieved because of field-level access checking.

04 The requested function could not be performed.

RACF RC	Meaning
00	No security decision could be made.

Reason Code	Meaning
00	The RACF router was not loaded; the request, resource, subsystem combination could not be found in the RACF ROUTER table; no successful exit processing can take place.

04	An ESTAE environment could not be established, or if Register 0 contains a reason code of 1, neither EXTRACT, EXTRACTN, REPLACE, nor ENCRYPT was specified for TYPE=.
08	For TYPE=EXTRACT, TYPE=EXTRACTN, or TYPE=REPLACE, the profile could not be found, or one of the other errors shown by the reason code has occurred.

Reason Code	Meaning
00	No profile found.
04	Field-level access checking failed. The FIELD class might not be active and RACLISTed.
08	Segment not found.
0C	Class not RACLISTed (branch EXTRACT).
10	Class not active (branch EXTRACT).
14	For EXTRACT: Neither the RESOWNER field nor the high-level qualifier matched a valid USER or GROUP. For branch EXTRACT: Field specified is not valid. Note that the field can be valid for a profile in the RACF database, but not for a RACLISTed profile.
18	For MATCHGN=YES with

ENTITYX= specified, the buffer length specified was too small to return the matching generic profile.

1C The class was RACLISTed by RACROUTE REQUEST=LIST, GLOBAL=YES, but the data space has been deleted (branch EXTRACT).

0C RACF is inactive.

10 The extract operation failed. SAFPRREA contains the RACF-manager return code that caused the operation to stop. The value in the SAFPRREA should be interpreted as follows:

Reason Code	Meaning
xxxxyyyy	*xxxx* is the RACF manager reason code and *yyyy* is the RACF manager return code. This return code is not used for the encrypt function.

For branch EXTRACT, the return and reason codes in SAFPRREA are internal RACF codes indicating an error in RACF, except for the following:

Reason Code	Meaning
00080018	The RACLIST data space cannot be accessed due to an ALESERV failure.

Note: For an explanation of the RACF manager return codes, refer to the part of *z/OS Security Server RACF Macros and Interfaces* that discusses the ICHEINTY macro or the section of *z/OS Security Server RACF Messages and Codes* that describes RACF manager return codes.

14 For TYPE=ENCRYPT or TYPE=EXTRACT of USER class data, ENTITY or ENTITYX was not specified and no ACEE exists or the ACEE was not for a defined user.

Reason Code	Meaning
00	No ACEE exists.
04	ACEERACF bit is off.

08 The requested function failed.

RACF RC	Meaning
18	A parameter-list error was encountered.

Reason Code	Meaning
04	For a TYPE=REPLACE request, FIELDS= was not specified.

08 Type specified is not valid.

0C Number of fields is not valid.

10 Class-name specified is not valid.

14 Version in parameter list is not valid.

18 Subpool specified is not valid.

1C Parameter length not valid.

20 For TYPE=REPLACE request, SEGDATA= was not specified.

24 Entity name specified is not valid.

2C For TYPE=ENCRYPT request, no user-authentication key was specified.

30 Encoding method is not valid.

34 ENTITY= or ENTITYX= was not specified with TYPE=REPLACE, TYPE=EXTRACTN, or TYPE=EXTRACT with class other than USER.

38 Multiple profiles and no volume specified.

3C Profile found, but the wrong volume serial number was specified.

40 For a TYPE=EXTRACT request of USER class data, FIELDS= is not permitted with BRANCH=YES because the USER class cannot be RACLISTed (branch EXTRACT).

44 For the ENTITYX format, both the entity-name length and the buffer length are zero.

48 Entity-name length with the ENTITY or ENTITYX keyword is not valid:

- The specified length is less than zero.
- The specified length is one of the following:
  - Greater than 44 if CLASS=DATASET,
  - Greater than 8 if CLASS=USER or GROUP,
  - Greater than 17 if CLASS=CONNECT, or
  - Greater than the maximum for the specified class as defined in the class descriptor table.

- For a TYPE=ENCRYPT request, the specified length is not zero or eight.

4C Buffer length specified with ENTITYX keyword not valid:

- Less than zero
- Greater than 255
- Not zero but less than the entity name length

50 The entity name contains a blank.

- If the ENTITYX keyword is specified and the entity-name length is given, the name has a blank in the beginning, in the middle, or at the end.

54 For a TYPE=ENCRYPT request for the STDDES authentication method, the specified data length is not 8.

58 For a TYPE=EXTRACT request of user-class data, the user specified with ENTITY= or ENTITYX= is not the same as the user specified in the ACEE (branch EXTRACT).

5C For a TYPE=EXTRACT request of user-class data that is defaulted from the ACEE, FIELDS= and SEGMENT= are not permitted because the user ID in the ACEE is not that of a RACF-defined user.

60 For TYPE=ENVRXTR, the ENVROUT keyword was not specified.

64 For TYPE=ENVRXTR, the ENVR object storage area address specified was not on a doubleword boundary.

68 For TYPE=ENVRXTR, the ENVR object could not be built because the ACEE was not valid.

64 Indicates that the CHECK subparameter of the RELEASE keyword was specified on the execute form of the RACROUTE REQUEST=EXTRACT macro; however, the list form of the macro does not have the same RELEASE parameter. It also indicates that the TYPE parameters specified on the list and execute forms might not be the same TYPE. Macro processing terminates.

Example 1

Operation: The following is an example of a RACROUTE REQUEST=EXTRACT that looks for an APPCLU profile that has been RACLISTed off an ACEE, the one

called VTAMACEE, to match the entity named in LULUPAIR. Specifying BRANCH=YES means that the function does not invoke an SVC. It is therefore SRB-compatible. If the function finds a profile to match the entity name, it returns fields specified in FLDLIST.

Because MATCHGN=YES is specified, if a discrete profile that matches the entity name is not found, the function looks for a best-matching generic profile. If a best-matching generic profile is found, the fields specified in FLDLST are returned from that profile. The best-matching generic profile is returned in the entity location.

```
RACROUTE REQUEST=EXTRACT,TYPE=EXTRACT,                              X
         BRANCH=YES,                                                X
         CLASS='APPCLU',                                            X
         ENTITY=LULUPAIR,                                           X
         ACEE=VTAMACEE,                                             X
         SEGMENT='SESSION',                                         X
         FIELDS=FLDLST,                                             X
         MATCHGN=YES,                                               X
         RELEASE=1.9,                                               X
         WORKA=RACWK
..........
LULUPAIR DC CL(35)'NETA.LU1.LU2'
FLDLST   DC A(3)
         DC CL8'SESSKEY'
         DC CL8'KEYDATE'
         DC CL8'KEYINTVL'
RACWK    DC CL512
```

Example 2

Operation: The following is an example of a RACROUTE REQUEST=EXTRACT that uses the STDDES authentication method to process the data in RANDATA, using the data in SESSNKEY as the authentication key. The function overlays the data in SESSNKEY with the product of the authentication process. Specifying BRANCH=YES means that the function is compatible with SRB mode and does not issue any SVCs.

```
RACROUTE REQUEST=EXTRACT,TYPE=ENCRYPT,                              X
         BRANCH=YES,                                                X
         ENTITY=RANDATA,                                            X
         ENCRYPT=(SESSNKEY,STDDES),                                 X
         RELEASE=1.9,                                               X
         WORKA=RACWK
..........
RANDATA  DC CL8'RANDATA1'
SESSNKEY DC AL1(8),CL8'SESSNKEY'
RACWK    DC CL512
```

Example 3

Operation: The following is an example of a RACROUTE REQUEST=EXTRACT with EXTRACTN. It retrieves all profiles within any class (except the DATASET class). The database must be processed twice, once to extract all discrete profiles and once to extract all generic profiles.

```
EXTRTNGR CSECT
*
*        Entry Linkage
*
         STM   14,12,12(13)              Push caller registers
         BALR  12,0                      Establish ...
         USING *,12                      ... addressability
         GETMAIN R,LV=DYNLEN             Get dynamic storage
         LR    11,1                      Move getmained address to R11
         USING DYNAREA,11                Addressability to DSECT
```

```
         ST    13,SAVEAREA+4             Save caller save area address
         LA    15,SAVEAREA               Get address of own save area
         ST    15,8(13)                  Store in caller save area
         LR    13,15                     Get address of own save area
*
*        Initialize variables in dynamic storage area
*
*
         MVC   ENTXBLEN,H6               Set buffer length to 6
         MVC   ENTXNLEN,H0               Set entity length to 0
         MVC   ENTXNAME,BLNKNAME         Set entity name to blanks
*
*        Copy static RACROUTE to dynamic GETMAINed areas
*
         MVC   DYNRACR(RACRLEN),STATRACR
*
*        Loop to retrieve the OWNER field from all discrete
*        profiles in the TAPEVOL class.
*
DISLOOP  EQU   *                         Start of discrete loop
         RACROUTE REQUEST=EXTRACT,TYPE=EXTRACTN,ENTITYX=ENTXBUFF,      *
              FIELDS=FIELDS,WORKA=WORKAREA,RELEASE=1.9,MF=(E,DYNRACR)
         LTR   15,15                     Check return code
         BNZ   TRYGEN                    Exit on nonzero return code
*                                        to search for generic profiles
*               .
*               .
*        Do discrete TAPEVOL profile processing here.
*               .
*               .
*                                        Free storage for this profile
         XR    3,3                       Zero out register 3
         XR    2,2                       Zero out register 2
         USING EXTWKEA,1                 Base the result area on
*                                        register 1
         ICM   3,1,EXTWSP                Move the result area subpool
*                                        into register 3
         ICM   2,7,EXTWLN                Move the result area length
*                                        into register 2
         DROP  1                         Drop basing on register 1
         FREEMAIN R,LV=(2),A=(1),SP=(3)  Free storage before processing
*                                        next profile
*
         B     DISLOOP                   Process next discrete profile
*
*
TRYGEN   EQU   *                         Search for generic profiles
*
         MVC   ENTXBLEN,H6               Set buffer length to 6
         MVC   ENTXNLEN,H0               Set entity length to 0
         MVC   ENTXNAME,BLNKNAME         Set entity name to blanks
         SLR   15,15                     Clear return code
*
*        Modify request to set GENERIC to YES
*
         RACROUTE REQUEST=EXTRACT,TYPE=EXTRACTN,GENERIC=YES,           *
               RELEASE=1.9,MF=(M,DYNRACR)
*
*        Loop to retrieve the OWNER field from all generic
*        profiles in the TAPEVOL class.
*
GENLOOP  EQU   *                         Start of generic loop
*
         RACROUTE REQUEST=EXTRACT,TYPE=EXTRACTN,ENTITYX=ENTXBUFF,      *
              FIELDS=FIELDS,WORKA=WORKAREA,RELEASE=1.9,MF=(E,DYNRACR)
         LTR   15,15                     Check return code
         BNZ   DONE                      Exit on nonzero return code
```

```
*               .
*               .
*        Do generic TAPEVOL profile processing here.
*               .
*               .
*                                        Free storage for this profile
         XR    3,3                       Zero out register 3
         XR    2,2                       Zero out register 2
         USING EXTWKEA,1                 Base the result area on
*                                        register 1
         ICM   3,1,EXTWSP                Move the result area subpool
*                                        into register 3
         ICM   2,7,EXTWLN                Move the result area length
*                                        into register 2
         DROP  1                         Drop basing on register 1
         FREEMAIN R,LV=(2),A=(1),SP=(3)  Free storage before processing
*                                        next profile
*
         B     GENLOOP                   Process next generic profile
*
*        Return to caller
*
DONE     EQU   *                         Return to caller
         L     13,SAVEAREA+4             Caller's save area address
         FREEMAIN R,LV=DYNLEN,A=(11)     Get dynamic storage
         LM    14,12,12(13)              Pop registers
         SLR   15,15                     Clear return code
         BR    14                        Return to caller
*
*        Static RACROUTE area
*
STATRACR RACROUTE REQUEST=EXTRACT,TYPE=EXTRACTN,ENTITYX=*-*,           *
               FIELDS=*-*,SEGMENT='BASE',CLASS='TAPEVOL',              *
               GENERIC=ASIS,WORKA=*-*,RELEASE=1.9,MF=L
RACRLEN  EQU   *-STATRACR               Length of RACROUTE
*
*        Constants
*
H0       DC    H'0'
H6       DC    H'6'
BLNKNAME DC    CL6' '
*
FIELDS   DC A(1)
         DC CL8'OWNER'
*
*        Result area mapping
*
         IRRPRXTW
*
*        Dynamic area
*
DYNAREA  DSECT
*
DYNRACR  RACROUTE REQUEST=EXTRACT,TYPE=EXTRACTN,ENTITYX=*-*,           *
               FIELDS=*-*,SEGMENT='BASE',CLASS='TAPEVOL',              *
               GENERIC=ASIS,WORKA=*-*,RELEASE=1.9,MF=L
*
*        ENTITYX structure
*
ENTXBUFF DS    0CL10                     ENTITYX structure
ENTXBLEN DS    H                         Entity name buffer length
ENTXNLEN DS    H                         Entity name actual length
ENTXNAME DS    CL6                       Entity name
*
*        Work and save areas
*
WORKAREA DS    128F                      Work area
```

```
SAVEAREA DC    18F'0'                    Save area
*
DYNLEN   EQU   *-DYNAREA                 Dynamic area length
*
         END
```

Example 4

Operation: The following is an example of a RACROUTE REQUEST=EXTRACT with EXTRACTN. It retrieves all profiles within the DATASET class. The database needs to be processed only once to extract all discrete and generic profiles in the DATASET class.

```
EXTRTNDS CSECT
*
*        Entry Linkage
*
         STM   14,12,12(13)              Push caller registers
         BALR  12,0                      Establish ...
         USING *,12                      ... addressability
         GETMAIN R,LV=DYNLEN             Get dynamic storage
         LR    11,1                      Move getmained address to R11
         USING DYNAREA,11                Addressability to DSECT
         ST    13,SAVEAREA+4             Save caller save area address
         LA    15,SAVEAREA               Get address of own save area
         ST    15,8(13)                  Store in caller save area
         LR    13,15                     Get address of own save area
*
*        Initialize variables in dynamic storage area
*
*
         MVC   ENTXBLEN,H44              Set buffer length to 44
         MVC   ENTXNLEN,H0               Set entity length to 0
         MVC   ENTXNAME,BLNKNAME         Set entity name to blanks
*
*        Copy static RACROUTE to dynamic GETMAINed areas
*
         MVC   DYNRACR(RACRLEN),STATRACR
*
*        Loop to retrieve the OWNER field from all DATASET
*        profiles for each high level qualifier.  Generic
*        profiles are retrieved first.
*
LOOP     EQU   *                         Start of loop
         RACROUTE REQUEST=EXTRACT,TYPE=EXTRACTN,ENTITYX=ENTXBUFF,      *
              FIELDS=FIELDS,WORKA=WORKAREA,RELEASE=1.9,MF=(E,DYNRACR)
         LTR   15,15                     Check return code
         BNZ   DONE                      Exit on nonzero return code
*               .
*               .
*        Do DATASET profile processing here.
*               .
*               .
*                                        Free storage for this profile
         USING EXTWKEA,1                 Base the result area on
*                                        register 1
         MVC   DYNGENRC,EXTFLAG          Make a local copy of generic
*                                        flag
         XR    3,3                       Zero out register 3
         ICM   3,1,EXTWSP                Move the result area subpool
*                                        into register 3
         XR    2,2                       Zero out register 2
         ICM   2,7,EXTWLN                Move the result area length
*                                        into register 2
         DROP  1                         Drop basing on register 1
         FREEMAIN R,LV=(2),A=(1),SP=(3)  Free storage before processing
```

```
*                                       next profile
*
         TM    DYNGENRC,X'80'           Check generic bit
         BO    GENERIC                  Branch if generic bit is on
*                                       Otherwise, profile is not
*                                       generic, so set GENERIC to
*                                       ASIS
         RACROUTE REQUEST=EXTRACT,TYPE=EXTRACTN,GENERIC=ASIS,          *
               RELEASE=1.9,MF=(M,DYNRACR)
         B     LOOP                     Process next profile
*
GENERIC  EQU   *                        Profile name is generic,
*                                       so set GENERIC to YES
         RACROUTE REQUEST=EXTRACT,TYPE=EXTRACTN,GENERIC=YES,           *
               RELEASE=1.9,MF=(M,DYNRACR)
*
         B     LOOP                     Process next profile
*
*        Return to caller
*
DONE     EQU   *                        Return to caller
         L     13,SAVEAREA+4            Caller's save area address
         FREEMAIN R,LV=DYNLEN,A=(11)    Get dynamic storage
         LM    14,12,12(13)             Pop registers
         SLR   15,15                    Clear return code
         BR    14                       Return to caller
*
*        Static RACROUTE area
*
STATRACR RACROUTE REQUEST=EXTRACT,TYPE=EXTRACTN,ENTITYX=*-*,           *
               FIELDS=*-*,SEGMENT='BASE',CLASS='DATASET',              *
               GENERIC=ASIS,WORKA=*-*,RELEASE=1.9,MF=L
RACRLEN  EQU   *-STATRACR              Length of RACROUTE
*
*        Constants
*
H0       DC    H'0'
H44      DC    H'44'
BLNKNAME DC    CL44' '
*
FIELDS   DC A(1)
         DC CL8'OWNER'
*
*        Result area mapping
*
         IRRPRXTW
*
*        Dynamic area
*
DYNAREA  DSECT
*
DYNRACR  RACROUTE REQUEST=EXTRACT,TYPE=EXTRACTN,ENTITYX=*-*,           *
               FIELDS=*-*,SEGMENT='BASE',CLASS='DATASET',              *
               GENERIC=ASIS,WORKA=*-*,RELEASE=1.9,MF=L
*
*        ENTITYX structure
*
ENTXBUFF DS    0CL48                    ENTITYX structure
ENTXBLEN DS    H                        Entity name buffer length
ENTXNLEN DS    H                        Entity name actual length
ENTXNAME DS    CL44                     Entity name
*
*        Work and save areas
*
WORKAREA DS    128F                     Work area
SAVEAREA DC    18F'0'                   Save area
DYNGENRC DS    CL1                      Local copy of generic flag
```

```
*
DYNLEN   EQU   *-DYNAREA                Dynamic area length
*
         END
```

RACROUTE REQUEST=EXTRACT (list form)

The list form of the RACROUTE REQUEST=EXTRACT macro is written as follows. Refer to the Standard Form of the RACROUTE REQUEST=EXTRACT macro to determine additional parameters that are required by the time the RACROUTE service is invoked using the Execute form of the macro.

name	*name*: Symbol. Begin *name* in column 1.
b	One or more blanks must precede RACROUTE.
RACROUTE	
b	One or more blanks must follow RACROUTE.

REQUEST=EXTRACT

,TYPE=EXTRACT
,TYPE=EXTRACTN
,TYPE=REPLACE
,TYPE=ENCRYPT
,TYPE=ENVRXTR

,ACEE=*acee addr*	*acee addr*: A-type address
,ENTITY=*profile name addr*	*profile name addr*: A-type address *profile name addr*: A-type address
,ENTITYX=*extended profile name addr*	*extended profile name addr*: A-type address
,FLDACC=YES ,FLDACC=NO	**Default:** FLDACC=NO
,GENERIC=ASIS ,GENERIC=YES	**Default:** GENERIC=ASIS
,VOLSER=*vol addr*	*vol addr*: A-type address

,MF=L

If TYPE=EXTRACT or EXTRACTN is specified:

,CLASS=*'class name'*	*class name*: 1–8 character name
,CLASS=*class name addr*	*class name addr*: A-type address **Default:** CLASS='USER'

,DATEFMT=YYYYDDDF ,DATEFMT=YYDDDF	**Default:** DATEFMT=YYDDDF
,DERIVE=YES	See explanation of keyword. **Default:** Normal processing
,FIELDS=*field addr*	*field addr*: A-type address
,SEGMENT=*'segment name'*	*segment name*: 1–8 character name
,SEGMENT=*segment name addr*	*segment name addr*: A-type address
,SUBPOOL=*subpool number*	*subpool number*: Decimal digit 0–255 **Default:** See explanation for SUBPOOL keyword on page 114.

If TYPE=REPLACE is specified:

,BRANCH=YES ,BRANCH=NO	**Default:** BRANCH=NO
,CLASS=*'class name'* ,CLASS=*class name addr*	*class name*: 1–8 character name *class name addr*: A-type address **Default:** CLASS='USER'
,DATEFMT=YYYYDDDF ,DATEFMT=YYDDDF	**Default:** DATEFMT=YYDDDF
,FIELDS=*field addr*	*field addr*: A-type address
,MATCHGN=YES ,MATCHGN=NO	**Default:** MATCHGN=NO
,SEGDATA=*segment data addr*	*segment data addr*: A-type address
,SEGMENT=*'segment name'*	*segment name*: 1–8 character name
,SEGMENT=*segment name addr*	*segment name addr*: A-type address

If TYPE=ENCRYPT is specified:

,BRANCH=YES ,BRANCH=NO	**Default:** BRANCH=NO
,ENCRYPT=(*data addr*,DES) ,ENCRYPT=(*data addr*,HASH)	*data addr*: A-type address

,ENCRYPT=(*data addr*,INST)
,ENCRYPT=(*data addr*,STDDES)

If TYPE=ENVRXTR is specified:

,ENVROUT=*envr data addr*
: *envr data addr*: A-type address or register (2) - (12)

Note: When TYPE=ENVRXTR is specified, only the keywords ACEE and ENVROUT are recognized, with ENVROUT being required.

The parameters are explained under the standard form of the RACROUTE REQUEST=EXTRACT macro with the following exception:

,MF=L
specifies the list form of the RACROUTE REQUEST=EXTRACT macro.

RACROUTE REQUEST=EXTRACT (execute form)

The execute form of the RACROUTE REQUEST=EXTRACT macro is written as follows. Refer to the Standard Form of the RACROUTE REQUEST=EXTRACT macro to determine additional parameters that are required by the time the RACROUTE service is invoked using the Execute form of the macro.

name
: *name*: Symbol. Begin *name* in column 1.

ƀ
: One or more blanks must precede RACROUTE.

RACROUTE

ƀ
: One or more blanks must follow RACROUTE.

REQUEST=EXTRACT

,TYPE=EXTRACT
,TYPE=EXTRACTN
,TYPE=REPLACE
,TYPE=ENCRYPT
,TYPE=ENVRXTR

,ACEE=*acee addr*
: *acee addr*: Rx-type address or register (2) - (12)

,ENTITY=*profile name addr*
: *profile name addr*: Rx-type address or register (2) - (12)

,ENTITYX=*extended profile name addr*	*extended profile name addr*: Rx-type address or register (2) - (12)
,FLDACC=YES ,FLDACC=NO	
,GENERIC=ASIS ,GENERIC=YES	
,RELEASE=*number* ,RELEASE=(,CHECK) ,RELEASE=(*number*,CHECK)	*number*: See Standard Form **Default:** RELEASE=1.6
,VOLSER=*vol addr*	*vol addr*: Rx-type address or register (2) - (12)
,MF=(E,*ctrl addr*)	*ctrl addr*: Rx-type address register (1), or register (2) - (12)

If TYPE=EXTRACT or EXTRACTN is specified:

,BRANCH=YES ,BRANCH=NO	
,CLASS=*class name addr*	*class name addr*: Rx-type address or register (2) - (12)
,DATEFMT=YYYYDDDF ,DATEFMT=YYDDDF	**Default:** DATEFMT=YYDDDF
,DERIVE=YES	See explanation of keyword.
,FIELDS=*field addr*	*field addr*: Rx-type address or register (2) - (12)
,MATCHGN=YES ,MATCHGN=NO	
,SEGMENT=*segment name addr*	*segment name addr*: Rx-type address or register (2) - (12)
,SUBPOOL=*subpool number*	*subpool number*: Decimal digit 0–255

If TYPE=REPLACE is specified:

,CLASS=*class name addr*	*class name addr*: Rx-type address or Register (2) - (12)
,DATEFMT=YYYYDDDF ,DATEFMT=YYDDDF	**Default:** DATEFMT=YYDDDF

,FIELDS=*field addr*	*field addr*: Rx-type address or register (2) - (12)
,SEGDATA=*segment data addr*	*segment data addr*: Rx-type address or register (2) - (12)
,SEGMENT=*segment name addr*	*segment name addr*: Rx-type address or register (2) - (12)

If TYPE=ENCRYPT is specified:

,BRANCH=YES ,BRANCH=NO	
,ENCRYPT=(*data addr*,DES) ,ENCRYPT=(*data addr*,HASH) ,ENCRYPT=(*data addr*,INST) ,ENCRYPT=(*data addr*,STDDES)	*data addr*: A-type address

If TYPE=ENVRXTR is specified:

,ENVROUT=*envr data addr*	*envr data addr*: A-type address or register (2) - (12) **Note:** When TYPE=ENVRXTR is specified, only the keywords ACEE and ENVROUT are recognized, with ENVROUT being required.

The parameters are explained under the standard form of the RACROUTE REQUEST=EXTRACT macro with the following exceptions:

,MF=(E,*ctrl addr***)**
specifies the execute form of the RACROUTE REQUEST=EXTRACT macro, using a remote, control-program parameter list.

,RELEASE=*number*
,RELEASE=(,CHECK)
,RELEASE=(*number***,CHECK)**
specifies the RACF release level of the parameter list to be generated by this macro.

Certain parameters can be specified only with particular releases. If you specify a parameter with an incompatible release level, the parameter is not accepted by macro processing. An error message is issued at assembly time.

The default is RELEASE=1.6.

When you specify the RELEASE keyword, checking is done at assembly time. Compatibility between the list and execute forms of the RACROUTE REQUEST=EXTRACT macro is validated at execution time if you specify the CHECK subparameter on the execute form of the macro.

The size of the list form expansion must be large enough to accommodate all parameters defined by the RELEASE keyword on the execute form of the macro. Otherwise, when CHECK processing is requested, the execute form of the macro is not done, and a return code of X'64' is returned.

RACROUTE REQUEST=EXTRACT (modify form)

The modify form of the RACROUTE REQUEST=EXTRACT macro is written as follows. Refer to the Standard Form of the RACROUTE REQUEST=EXTRACT macro to determine additional parameters that are required by the time the RACROUTE service is invoked using the Execute form of the macro.

name	*name*: Symbol. Begin *name* in column 1.
b	One or more blanks must precede RACROUTE.
RACROUTE	
b	One or more blanks must follow RACROUTE.
REQUEST=EXTRACT	
,TYPE=EXTRACT ,TYPE=EXTRACTN ,TYPE=REPLACE ,TYPE=ENCRYPT ,TYPE=ENVRXTR	
,ACEE=*acee addr*	*acee addr*: Rx-type address or register (2) - (12)
,ENTITY=*profile name addr*	*profile name addr*: Rx-type address or register (2) - (12)
,ENTITYX=*extended profile name addr*	*extended profile name addr*: Rx-type address or register (2) - (12)
,FLDACC=YES ,FLDACC=NO	
,GENERIC=ASIS ,GENERIC=YES	
,MF=(M,*ctrl addr*)	*ctrl addr*: Rx-type address register (1), or register (2) - (12)

If TYPE=EXTRACT or EXTRACTN is specified:

,BRANCH=YES ,BRANCH=NO	

,CLASS=*class name addr*	*class name addr*: Rx-type address or register (2) - (12)
,DATEFMT=YYYYDDDF ,DATEFMT=YYDDDF	**Default:** DATEFMT=YYDDDF
,DERIVE=YES	See explanation of keyword.
,FIELDS=*field addr*	*field addr*: Rx-type address or register (2) - (12)
,MATCHGN=YES ,MATCHGN=NO	
,SEGMENT=*segment name addr*	*segment name addr*: Rx-type address or register (2) - (12)
,SUBPOOL=*subpool number*	*subpool number*: Decimal digit 0–255

If TYPE=REPLACE is specified:

,CLASS=*class name addr*	*class name addr*: Rx-type address or register (2) - (12)
,DATEFMT=YYYYDDDF ,DATEFMT=YYDDDF	**Default:** DATEFMT=YYDDDF
,FIELDS=*field addr*	*field addr*: Rx-type address or register (2) - (12)
,SEGDATA=*segment data addr*	*segment data addr*: Rx-type address or register (2) - (12)
,SEGMENT=*segment name addr*	*segment name addr*: Rx-type address or register (2) - (12)

If TYPE=ENCRYPT is specified:

,BRANCH=YES ,BRANCH=NO	
,ENCRYPT=(*data addr*,DES) ,ENCRYPT=(*data addr*,HASH) ,ENCRYPT=(*data addr*,INST) ,ENCRYPT=(*data addr*,STDDES) ,ENVROUT=*data addr* ,INST) ,ENVRXTR=*data addr* ,STDDES)	*data addr*: A-type address

If TYPE=ENVRXTR is specified:

,ENVROUT=*envr data addr*	*envr data addr*: A-type address or register (2) - (12) **Note:** When TYPE=ENVRXTR is specified, only the keywords ACEE and ENVROUT are recognized, with ENVROUT being required.

The parameters are explained under the standard form of the RACROUTE REQUEST=EXTRACT macro with the following exceptions:

,MF=(M,*ctrl addr***)**
specifies the modify form of the RACROUTE REQUEST=EXTRACT macro, using a remote, control-program parameter list.

RACROUTE REQUEST=FASTAUTH: Verify access to resources

The RACROUTE REQUEST=FASTAUTH macro is used to check a user's authorization for access to a resource. RACROUTE REQUEST=FASTAUTH verifies access to those resources whose RACF profiles have been brought into main storage by the RACROUTE REQUEST=LIST service or by SETROPTS RACLIST. If the profiles were not RACLISTed by RACROUTE REQUEST=LIST but were processed using SETROPTS RACLIST, and the caller is in supervisor state or system key (0–7), FASTAUTH utilizes the SETROPTS profiles RACLISTed for the authorization check. Using SETROPTS RACLIST instead of RACROUTE REQUEST=LIST to bring profiles into storage can simplify application design. However, to get optimum performance from calls to RACROUTE REQUEST=FASTAUTH, the class should be RACLISTed using RACROUTE REQUEST=LIST.

RACROUTE REQUEST=FASTAUTH does limited parameter validation, and does not gather statistics or issue SVCs. Therefore, use of RACROUTE REQUEST=FASTAUTH is recommended only for applications that have stringent performance requirements.

The RACROUTE REQUEST=FASTAUTH caller must be authorized (supervisor state or system key 0–7) for certain keywords. See the keyword descriptions for authorization requirements. Note that the caller cannot hold any locks when issuing RACROUTE REQUEST=FASTAUTH.

You can use the installation exits associated with RACROUTE REQUEST=FASTAUTH to make additional security checks or to instruct RACROUTE REQUEST=FASTAUTH to either accept or fail the request. You can write an application that uses RACROUTE REQUEST=LIST and RACROUTE REQUEST=FASTAUTH for authorization checking on a resource class and associated resource group that your installation defines.

RACROUTE REQUEST=FASTAUTH is SRB-compatible on RACF 1.9.2 or later; on RACF 1.9, this macro is SRB-compatible *only* when ACEE is specified. When issuing RACROUTE REQUEST=FASTAUTH in SRB mode for RACLISTed classes,

you must ensure that the jobstep task pointed to by the ASCBXTCB field in the target address space is active when you schedule the SRB, and remains active until the SRB completes.

Note: In order to ensure that the SRB does not run after the ASCBXTCB task completes, it is necessary to enable purgeDQ to deal with that SRB. In particular:

- If using SCHEDULE, SRBPASID must be set to the ASID, and SRBPTCB must be set to the contents of ASCBXTCB.
- If using IEAMSCHD, PURGESTOKEN must be specified with the STOKEN of the space, and PTCBADDR must be specified with the contents of ASCBXTCB.

When the task terminates, the purgeDQ issued causes the SRB's resource manager termination routine (RMTR) to be driven if the SRB has not begun to run, or waits for the SRB to complete if the SRB has begun to run.

RACROUTE REQUEST=FASTAUTH can also be invoked from a cross memory environment, when in task or SRB mode. The ACEE used for authority checking must reside in the HOME address space (unless ACEEALET specifies a different address space), but that ACEE is not used to locate the profiles RACLISTed. The main ACEE in the PRIMARY address space is used to locate the profiles.

RACROUTE REQUEST=FASTAUTH provides support for auditing. FASTAUTH determines that auditing is necessary if at least one of the following conditions is met:

- the user represented by the ACEE or ENVR object is being audited (UAUDIT option),
- the profile protecting the resource indicates that auditing is to be done (AUDIT, GLOBALAUDIT, and WARNING options), or
- the pre- or post-installation exits indicate that auditing is to be done.

The type of auditing support provided is based on the value of the LOG keyword. Either a reason code indicating whether or not logging needs to be done can be returned to the caller or RACROUTE REQUEST=FASTAUTH can perform the auditing itself. Applications can determine whether the cross memory support and the support enabling RACROUTE REQUEST=FASTAUTH to perform the auditing itself is available by examining the flag bit RCVTXMFR in the RCVT data area.

Note: Callers in cross-memory mode must be in primary ASC mode when they issue the RACROUTE request.

Note

Attention: The RACROUTE REQUEST=FASTAUTH macro executes in the addressing mode of the caller. Therefore, to access profiles that reside above 16MB, the program that issues RACROUTE REQUEST=FASTAUTH must be running in 31-bit addressing mode when it issues RACROUTE REQUEST=FASTAUTH.

RACROUTE REQUEST=FASTAUTH (standard form)

The standard form of the RACROUTE REQUEST=FASTAUTH macro instruction is written as follows. For a description of additional keywords that you can code and additional parameters that are required on the RACROUTE request, but that are not specific to this request type, see “RACROUTE (standard form)” on page 13.

Note

RACROUTE REQUEST=FASTAUTH requires an ACEE. For most applications, the system will have created an ACEE to represent the active user. However, for special cases where no ACEE exists, the invoker must create one before invoking RACROUTE REQUEST=FASTAUTH.

The most common way to create an ACEE is to issue a RACROUTE REQUEST=VERIFY, specifying ENVIR=CREATE. After all RACROUTE invocations are complete, the invoker should issue RACROUTE REQUEST=VERIFY with ENVIR=DELETE specified, to delete the ACEE previously created.

name	*name*: Symbol. Begin *name* in column 1.
b	One or more blanks must precede RACROUTE.
RACROUTE	
b	One or more blanks must follow RACROUTE.
REQUEST=FASTAUTH	
,CLASS=*‘class name’* ,CLASS=*class name addr*	*class name*: 1–8 character class name *class name addr*: A-type address or register (2) - (12)
,ENTITY=*entity addr* ,ENTITYX=*extended profile name addr*	*entity addr*: A-type address or register (2) - (12) *extended profile name addr*: A-type address or register (2) - (12)
,WKAREA=*area addr*	*area addr*: A-type address or register (2) - (12)
,ACEE=*acee addr*	*acee addr*: A-type address or register (2) - (12)
,ACEEALET=*alet addr*	*alet addr*: A-type address or register (2) - (12)
,APPL=*‘applname’* ,APPL=*applname addr*	*applname*: 1–8 character name *applname addr*: A-type address or register (2) - (12)
,ATTR=READ ,ATTR=UPDATE ,ATTR=CONTROL	**Default:** ATTR=READ

,ATTR=ALTER	
,ATTR=*reg*	*reg*: Registers (2) - (12)
,ENVRIN=*envr data addr*	*envr data addr*: A-type address or register (2) - (12)
,INSTLN=*parm list addr*	*parm list addr*: A-type address or register (2) - (12)
,LOG=ASIS ,LOG=NOFAIL ,LOG=NONE	**Default:** LOG=NONE
,LOGSTR=logstr addr	*logstr addr*: A-type address or register (2) - (12)
,MF=S	

The parameters are explained as follows:

,ACEE=*acee addr*

specifies the address of the ACEE to be used to check authorization. If the caller is in cross-memory mode, the specified ACEE must reside in the HOME address space unless the ACEEALET= keyword specifies a different address space.

To use this keyword, the calling program must not specify the ENVRIN= keyword.

This ACEE might also be used to locate the profile protecting the resource. The profiles brought into storage by RACROUTE REQUEST=LIST are anchored in an ACEE. The ACEE used to access the profile protecting the resource is determined as follows:

	Cross-memory request		Non-cross-memory request	
	GLOBAL=NO	GLOBAL=YES	GLOBAL=NO	GLOBAL=YES
ACEEALET is specified.	Main ACEE in primary address space		Main ACEE in primary address space	
ACEEALET is not specified.			1) Input ACEE 2) Task ACEE 3) Main ACEE *	1) Input ACEE if system key or supervisor state 2) Task ACEE 3) Main ACEE **

The following explanations refer to the asterisks in the above table:

***** If the input ACEE is not specified, then RACF uses the TASK ACEE (TCBSENV) pointer in the TCB. If there is no TCB (which is the case in SRB mode), or if the TASK ACEE pointer is zero, then RACF uses the main ACEE for the address space.

****** If the FASTAUTH caller is in system key or supervisor state, RACF uses the input ACEE if specified. If not, RACF uses the TASK ACEE. If there is no TCB

(which is the case in SRB mode), or if the TASK ACEE pointer is zero, RACF uses the main ACEE for the address space.

Note: If the above search of the ACEE(s) determines that the class is not RACLISTed by RACROUTE REQUEST=LIST, and the caller is in supervisor state or system key (0–7), FASTAUTH utilizes profiles brought into storage by the SETROPTS RACLIST command.

,ACEEALET=*alet addr*
specifies the address of the 4-byte ALET to be used to access the ACEE specified on the ACEE= keyword. When you use A-type or RX-type notation, alet addr specifies the name of a 4-byte field that contains the ALET. When you use register notation, alet addr specifies a register that contains the address of a 4-byte field that contains the ALET. If this keyword is not specified, the ACEE is located as defined in the ACEE= keyword description.

Keyword Requirements

1. Run in supervisor state or system key (0–7).
2. Ensure that the address space identified by ACEEALET= is marked non-swappable.
3. Ensure the specified ALET represents a valid entry in the DU-AL of the work unit or the PASN-AL of the current primary address space.
4. Specify the ACEE= keyword.
5. Specify RELEASE=2.4 or later.

,APPL=*'applname'*
,APPL=*applname addr*
specifies the name of the application requesting the authorization checking. This information is not used for the authorization-checking process but is made available to the installation exit or exits. If an address is specified, it should point to an 8-byte area containing the application name, left-justified and padded with blanks if necessary.

,ATTR=READ
,ATTR=UPDATE
,ATTR=CONTROL
,ATTR=ALTER
,ATTR=*reg*
specifies the access authority the user must have to the resource profile. The following definitions apply:

READ	RACF user or group can open the resource only to read.
UPDATE	RACF user or group can open the resource to read or write.
CONTROL	For VSAM data sets, RACF user or group has authority equivalent to the VSAM control password. For non-VSAM data sets and other resources, RACF user or group has UPDATE authority.
ALTER	RACF user or group has total control over the resource.

If a register is specified, the register must contain one of the following codes in the low-order byte of the register:
X'02' READ
X'04' UPDATE
X'08' CONTROL
X'80' ALTER

The default is READ.

,CLASS=*'class name'*
,CLASS=*class name addr*
specifies that RACF authorization checking is to be performed for a resource of the specified class. If an address is specified, the address must point to an 8-byte field containing the class name, left-justified and padded to the right with blanks.

,ENTITY=*entity addr*
specifies that RACF authorization checking is to be performed for the resource whose name is pointed to by the specified address. The resource name is a 6-byte volume serial number for CLASS=DASDVOL or CLASS=TAPEVOL. The name must be left-justified and padded with blanks. The length of all other resource names is determined from the class-descriptor tables.

,ENTITYX=*extended profile name addr*
specifies the address of a structure that consists of two 2-byte length fields, followed by the entity name. The first 2-byte field specifies a buffer length that can be from 0 to 255 bytes. This length field refers to the length of the buffer that contains the entity name; it does not include the length of either length field. The second 2-byte field specifies the actual length of the entity name. This length field includes the length of the actual name without any trailing blanks; it does not include the length of either length field.

These two length fields can be used in several different ways. If you know the length of the entity name, you can specify 0 in the first field and the length of the entity name in the second field. Note that each byte counts when you specify the second field. The entity name you specify must match the entity name on the RACF database. If you choose to place the entity name in a buffer area, specify the length of the buffer in the first field. For the second field, do one of the following:

- If you know the length of the entity name, specify the length in the second field. The length of the first field can be from 0 to 255, but *must* be equal to or greater than the length of the second field.
- If you do not know the length of the entity name, specify 0 in the second field, and have RACF determine the number of characters in the entity name. In this case, the entity name must be bounded on the right by a blank, unless its length is the length of the buffer itself.
- Use of ENTITYX requires RELEASE=2.6 or later.

,ENVRIN=*envr data addr*
specifies the data structure that contains the information necessary to re-create the security environment to be used for authorization checking.

The data structure describes the storage location for the ENVR object. While the format of the data structure pointed to by the ENVRIN keyword is known to the RACROUTE invokers, the content of the ENVR object is determined by the external security product. Both the data structure, and the storage location for the ENVR object are expected to be in the PRIMARY address space.

When the ENVRIN keyword is used, in-storage profiles RACLISTed by RACROUTE REQUEST=LIST are located using the address space level ACEE in the primary address space. If no RACROUTE REQUEST=LIST was done for the requested class, but the class was processed using SETROPTS RACLIST, then those profiles are used.

To use this keyword the calling program must:

1. Run in supervisor state or system key (0–7)

2. Not specify the ACEE= keyword
3. Specify RELEASE=2.6 or later

The data structure that the ENVRIN keyword points to is defined in the keyword description for ENVROUT on the RACROUTE REQUEST=VERIFY macro.

,INSTLN=*parm list addr*
specifies the address of an area that contains information for the RACROUTE REQUEST=FASTAUTH installation exit. This address is passed to the exit routine when the exit is given control. The INSTLN parameter is used by application or installation programs to pass information to the RACROUTE REQUEST=FASTAUTH installation exit.

,LOG=ASIS
,LOG=NOFAIL
,LOG=NONE
specifies the types of access attempts to be audited. To use this keyword, you must also specify RELEASE=2.1 or later.

ASIS RACF performs auditing if its authorization check results in success (RC=0) or failure (RC=8), and it determines auditing is necessary based on the user's UAUDIT setting, the AUDIT, GLOBALAUDIT, and WARNING options in the profile protecting the resource, and the pre- or postprocessing installation exit's indication of whether or not to do auditing.

NOFAIL
If the authorization check fails, the attempt is not recorded. If the authorization check succeeds, the attempt is recorded as in ASIS.

NONE The attempt is not recorded.

LOG=NONE suppresses both messages and SMF records regardless of MSGSUPP=NO.

Note: For LOG=NOFAIL and LOG=NONE, the caller should examine the reason code returned in SAFPRREA to determine whether auditing is required. If so, it is the caller's responsibility to ensure that auditing occurs, either by issuing RACROUTE REQUEST=AUTH with LOG=ASIS or RACROUTE REQUEST=FASTAUTH with LOG=ASIS.

,LOGSTR=*logstr addr*
specifies a variable length data string consisting of a 1-byte, binary length field followed by character data that is to be included in the RACF SMF process records. The character data can be 0 to 255 bytes long. When you use A-type or RX-type notation, logstr addr specifies the field name of the data string. When you use register notation, logstr addr specifies a register that contains the address of a 4-byte field that contains the data string. To use this keyword, you must also specify RELEASE=2.4 or a later release number.

,WKAREA=*area addr*
specifies the address of a 16-word work area to be used by RACROUTE REQUEST=FASTAUTH. On return from RACROUTE REQUEST=FASTAUTH, the following fields contain:

Word 12
The RACF reason code.

Word 13
The RACF return code.

Word 14

The address of the in-storage profile used to determine authorization; if no profile was found or the profiles were RACLISTed using RACROUTE REQUEST=LIST, GLOBAL=YES or SETROPTS RACLIST, word 14 contains zero. If a profile was found and not RACLISTed using RACROUTE REQUEST=LIST, GLOBAL=YES, or SETROPTS RACLIST, the profile address is passed to the caller in register 1.

Note that the profile can be mapped using the RACPRE structure found in the ICHPISP macro.

Word 15

A value provided by a pre- or postprocessing installation exit, or zero.

MF=S

specifies the standard form of the RACROUTE REQUEST=FASTAUTH macro instruction.

Return codes and reason codes

When you execute the macro, space for the RACF return code and reason code is reserved in the first two words of the RACROUTE parameter list. You can access them using the ICHSAFP mapping macro, by loading the ICHSAFP pointer with the label that you specified on the list form of the macro. When control is returned, register 15 contains the SAF return code and register 1 might contain the address of the profile protecting the resource.

Note to Reader

All return and reason codes are shown in hexadecimal. Also, please note that SAF return code is presented as SAF RC and RACF return code is presented as RACF RC in the following section.

SAF RC	Meaning
00	RACROUTE REQUEST=FASTAUTH has completed successfully.

RACF RC	Meaning
00	The user or group is authorized to use the resource.

Reason Code	Meaning
00	The invoker does not need to log the attempt.
04	The invoker should log the attempt. The RACROUTE REQUEST=FASTAUTH caller should log the attempt using RACROUTE REQUEST=AUTH or RACROUTE REQUEST=FASTAUTH with LOG=ASIS.

SAF RC	Meaning
04	The requested function could not be performed.

RACF RC	Meaning
00	No security decision could be made. The RACF router was not loaded; the request, resource,

subsystem combination could not be found in the RACF ROUTER table; no successful exit processing can take place.

04 The resource or class name is not defined to RACF or the class has not been RACLISTed.

0C RACF is not active.

1C The class was RACLISTed by RACROUTE REQUEST=LIST, GLOBAL=YES, or SETROPTS RACLIST, but the data space has been deleted.

20 The class was RACLISTed by RACROUTE REQUEST=LIST, GLOBAL=YES, or SETROPTS RACLIST, but the data space cannot be accessed due to an ALESERV failure.

08 The requested function failed.

RACF RC	Meaning
08	The user or group is not authorized to use the resource.

Reason Code	Meaning
00	The invoker does not need to log the request.
04	The invoker should log the attempt. The RACROUTE REQUEST=FASTAUTH caller should log the attempt using RACROUTE REQUEST=AUTH or RACROUTE REQUEST=FASTAUTH with LOG=ASIS.

RACF RC	Meaning
10	A RACROUTE REQUEST=FASTAUTH installation exit error occurred.
18	Indicates the profile has a conditional access list, the port-of-entry field in the security token is blank-filled, and the port-of-entry class is active.
24	Parameter list error.

Reason Code	Meaning
8	The ACEEALET= keyword was specified, but the calling program is not running in supervisor state or system key.
0C	The ACEEALET= keyword was specified, but the ACEE= keyword was not specified.
10	The ENVRIN keyword was specified, but the calling program is not running in supervisor state or system key.

14	ENVRIN and ACEE were both specified (they are mutually exclusive keywords).

64	Indicates that the CHECK subparameter of the RELEASE keyword was specified on the execute form of the RACROUTE REQUEST=FASTAUTH macro, however, the list form of the macro does not have the same RELEASE parameter. Macro processing terminates.

Class descriptor table default return codes and reason codes

Normally, if a resource profile is not found, the function returns a return code of 4. However, if a resource profile is not found but a default return-code keyword is specified in the class descriptor table for the class specified on the RACROUTE REQUEST=FASTAUTH, the function returns that specified return code.

RACROUTE REQUEST=FASTAUTH (list form)

The list form of the RACROUTE REQUEST=FASTAUTH macro instruction is written as follows. Refer to the Standard Form of the RACROUTE REQUEST=FASTAUTH macro to determine additional parameters that are required by the time the RACROUTE service is invoked using the Execute form of the macro.

name	*name*: Symbol. Begin *name* in column 1.
b	One or more blanks must precede RACROUTE.
RACROUTE	
b	One or more blanks must follow RACROUTE.
REQUEST=FASTAUTH	
,ACEE=*acee addr*	*acee addr*: A-type address
,ACEEALET=*alet addr*	*alet addr*: A-type address
,APPL=*'applname'*	*applname*: 1–8 character name
,APPL=*applname addr*	*applname addr*: A-type address
,ATTR=READ ,ATTR=UPDATE ,ATTR=CONTROL ,ATTR=ALTER	**Default:** ATTR=READ
,CLASS=*'class name'*	*class name*: 1–8 character class name
,CLASS=*class name addr*	*class name addr*: A-type address
,ENTITY=*entity addr*	*entity addr*: A-type address
,ENTITYX=*extended profile name addr*	*extended profile name addr*: A-type address

,ENVRIN=*envr data addr*	*envr data addr*: A-type address
,INSTLN=*parm list addr*	*parm list addr*: A-type address
,LOG=ASIS ,LOG=NOFAIL ,LOG=NONE	**Default:** LOG=NONE
,LOGSTR=logstr addr	*logstr addr:*A-type address
,WKAREA=*area addr*	*area addr*: A-type address

,MF=L

The parameters are explained under the standard form of the RACROUTE REQUEST=FASTAUTH macro instruction with the following exception:

,MF=L
specifies the list form of the RACROUTE REQUEST=FASTAUTH macro instruction.

RACROUTE REQUEST=FASTAUTH (execute form)

The execute form of the RACROUTE REQUEST=FASTAUTH macro instruction is written as follows. Refer to the Standard Form of the RACROUTE REQUEST=FASTAUTH macro to determine additional parameters that are required by the time the RACROUTE service is invoked using the Execute form of the macro.

name	*name*: Symbol. Begin *name* in column 1.
b	One or more blanks must precede RACROUTE.

RACROUTE

b	One or more blanks must follow RACROUTE. REQUEST=FASTAUTH.

REQUEST=FASTAUTH

,ACEE=*acee addr*	*acee addr*: Rx-type address or register (2) - (12)
,ACEEALET=*alet addr*	*alet addr*: Rx-type address or register (2) - (12)
,APPL=*applname addr*	*applname addr*: Rx-type address or register (2) - (12)
,ATTR=READ ,ATTR=UPDATE	

,ATTR=CONTROL ,ATTR=ALTER ,ATTR=*reg*	*reg*: Register (2) - (12)
,CLASS=*class name addr*	*class name addr*: Rx-type address or register (2) - (12)
,ENTITY=*entity addr*	*entity addr*: Rx-type address or register (2) - (12)
,ENTITYX=*extended profile name addr*	*extended profile name addr*: Rx-type address or register (2) - (12)
,ENVRIN=*envr data addr*	*envr data addr*: Rx-type address or register (2) - (12)
,INSTLN=*parm list addr*	*parm list addr*: Rx-type address or register (2) - (12)
,LOG=ASIS ,LOG=NOFAIL ,LOG=NONE	**Default:** LOG=NONE
,LOGSTR=logstr addr	*logstr addr*: Rx-type address or register (2)-(12)
,RELEASE=*number*	*number*: See Standard Form
,RELEASE=(,CHECK) ,RELEASE= (*number*,CHECK)	**Default:** RELEASE=1.6
,WKAREA=*area addr*	*area addr*: Rx-type address or register (2) - (12)
,MF=(E,*ctrl addr*)	*ctrl addr*: Rx-type address or register (1) - (12)

The parameters are explained under the standard form of the RACROUTE REQUEST=FASTAUTH macro instruction with the following exceptions:

,MF=(E,*ctrl addr*)
specifies the execute form of the RACROUTE REQUEST=FASTAUTH macro instruction, using a remote, control-program parameter list.

,RELEASE=*number*
,RELEASE=(,CHECK)
,RELEASE=(*number*,CHECK)
specifies the RACF release level of the parameter list to be generated by the macro.

To use the parameters associated with a release, you must specify the number of that release or a later release number. If you specify an earlier release level, the parameter is not accepted by macro processing, and an error message is issued at assembly time.

When you specify the RELEASE keyword, checking is done at assembly time. Compatibility between the list and execute forms of the RACROUTE REQUEST=FASTAUTH macro are validated at execution time if you specify the CHECK subparameter on the execute form of the macro.

The size of the list form expansion must be large enough to accommodate all parameters defined by the RELEASE keyword on the execute form of the macro. Otherwise, when CHECK processing is requested, the execute form of the macro is not done, and a return code of X'64' is returned.

RACROUTE REQUEST=LIST: Build in-storage profiles

RACROUTE REQUEST=LIST builds in-storage profiles for RACF-defined resources. RACROUTE REQUEST=LIST processes only those resources described by class descriptors. Profiles built by RACROUTE REQUEST=LIST can be used by RACROUTE REQUEST=FASTAUTH, or by RACROUTE REQUEST=AUTH, to verify a user's access to a resource.

In-storage profiles are built from a profile on the RACF database or from potentially several profiles on the database if resource member and grouping class profiles are utilized. Each resulting in-storage profile has a size limit of 65535 bytes. See the section in the *z/OS Security Server RACF Security Administrator's Guide* on *Limiting the Size of Your Access Lists* for a discussion on access lists and other contributors to the size of an in-storage profile.

The default is RELEASE=1.6.

The module calling the RACROUTE REQUEST=LIST macro must be one of the following:

- Authorized (APF-authorized, in system key 0-7, or in supervisor state), or
- Link-edited with the RENT (reentrant) option, and listed in the RACF authorized caller table.

Note: It is recommended that if you run programs that issue the RACROUTE REQUEST=LIST macro, you run those programs APF-authorized. See *z/OS Security Server RACF System Programmer's Guide* for information on the authorized caller table.

If the ACEE is below 16MB, any area chained off an ACEE, with the exception of generic profiles, is also placed below 16MB. Otherwise, the area is placed above 16MB. However, a caller executing in 31-bit mode might issue a REQUEST=LIST with LOC=ABOVE to have the profiles placed above 16MB if possible, even if the ACEE is below 16MB.

The caller cannot hold any locks when issuing RACROUTE REQUEST=LIST.

RACROUTE REQUEST=LIST (standard form)

The standard form of the RACROUTE REQUEST=LIST macro is written as follows. For a description of additional keywords that you can code and additional parameters the are required on the RACROUTE request, but that are not specific to this request type, see "RACROUTE (standard form)" on page 13.

Note

RACROUTE REQUEST=LIST requires an ACEE. For most applications, the system will have created an ACEE to represent the active user. However, for special cases where no ACEE exists, the invoker must create one before invoking RACROUTE REQUEST=LIST.

The most common way to create an ACEE is to issue a RACROUTE REQUEST=VERIFY, specifying ENVIR=CREATE. After all RACROUTE invocations are complete, the invoker should issue RACROUTE REQUEST=VERIFY with ENVIR=DELETE specified, to delete the ACEE previously created.

Application programs must be structured so that a task requesting RACF services does not do so while other I/O initiated by the task is outstanding. If such I/O is required, the task should either wait for the other I/O to complete before requesting RACF services, or the other I/O should be initiated under a separate task. This is necessary to assure proper processing in recovery situations.

name	*name*: Symbol. Begin *name* in column 1.
b	One or more blanks must precede RACROUTE.
RACROUTE	
b	One or more blanks must follow RACROUTE.
REQUEST=LIST	
,CLASS=*'class name'*	*class name*: 1-8 character name
,CLASS=*class name addr*	*class name addr*: A-type address or register (2) - (12)
,ACEE=*acee addr*	*acee addr*: A-type address or register (2) - (12)
,APPL=*'applname'*	*applname*: 1-8 character name
,APPL=*applname addr*	*applname addr*: A-type address or register (2) - (12)
,ENVIR=CREATE ,ENVIR=DELETE	**Default:** ENVIR=CREATE
,FILTER=*filter addr*	*filter addr*: A-type address or register (2) - (12)
,GLOBAL=YES ,GLOBAL=NO	**Default:** GLOBAL=NO
,INSTLN=*parm list addr*	*parm list addr*: A-type address or register (2) - (12)

,LIST=*list addr*	*list addr*: A-type address or register (2) - (12)
,LOC=ANY ,LOC=ABOVE	**Default:** See parameter description.
,OWNER=YES ,OWNER=NO	**Default:** OWNER=NO
,SUBPOOL=(*sub#1,sub#2*)	*sub#1,sub#2*: Decimal digit 0-255
,MF=S	

The parameters are explained as follows:

,ACEE=*acee addr*
specifies the address of the ACEE. RACF uses the ACEE to anchor the list of in-storage profiles.

If an ACEE is not specified, RACF uses the TASK ACEE pointer in the extended TCB called the TCBSENV. If the TASK ACEE pointer is zero, RACF uses the main ACEE (pointed to by the ASXBSENV field of the address-space extension block) to anchor the list of the in-storage profiles. If there is no main ACEE, the in-storage profiles are not constructed.

,APPL=*'applname'*
,APPL=*applname addr*
specifies the name of the application requesting the authorization-checking. This information is not used for the authorization-checking process but is made available to the installation exit or exits. If an address is specified, it should point to an 8-byte area containing the application name, left-justified and padded with blanks if necessary.

,CLASS=*'class name'*
,CLASS=*class name addr*
specifies that RACROUTE REQUEST=LIST is to build an in-storage profile for the resources of the specified class. If an address is specified, the address must point to an 8-byte field containing the class name, left-justified and padded with blanks, if necessary.

The class name must be a valid, active class as defined in the class descriptor table. It must also be a member class. If the member class has a grouping class associated with it, RACF utilizes both the member and the grouping class when building the in-storage profiles.

,ENVIR=CREATE
,ENVIR=DELETE
specifies the action to be performed by the RACROUTE REQUEST=LIST macro.

CREATE
In-storage profiles for the specified class are to be built. The RACROUTE REQUEST=LIST function issues a return code of 18 if an in-storage list currently exists for the specified class.

DELETE
The in-storage profiles for the specified class are to be freed. If class is not specified, the in-storage profiles for all classes are freed.

Notes:

1. The user issuing the RACROUTE REQUEST=LIST macro has the responsibility to ensure that no multitasking that results in the issuing of a RACROUTE REQUEST=AUTH, RACROUTE REQUEST=FASTAUTH, RACROUTE REQUEST=VERIFY, or RACROUTE REQUEST=LIST macro occurs at the same time as the RACROUTE REQUEST=LIST.
2. When a user has issued a RACROUTE REQUEST=LIST, ENVIR=CREATE to build in-storage profiles, it is the user's responsibility to issue a RACROUTE REQUEST=LIST, ENVIR=DELETE to delete the in-storage profiles when they are no longer needed. Failure to do so can cause unpredictable results.
3. When profiles have been RACLISTed with GLOBAL=YES, ENVIR=DELETE removes the user's access to the data space. The data space is not altered. The data space can be deleted by a SETROPTS NORACLIST (*classname*) command, but the command should not be issued until all of the applications that accessed the data space using RACROUTE REQUEST=LIST, ENVIR=CREATE, GLOBAL=YES request have relinquished their access by issuing RACROUTE REQUEST=LIST, ENVIR=DELETE requests. The classes processed by a SETROPTS NORACLIST command include not only the class specified on the command, but all valid classes that share the same POSIT.

,FILTER=*filter addr*
specifies the address of a generic filter string, which RACF uses to search the RACF database and select profile names for which RACROUTE REQUEST=LIST builds in-storage profiles. The filter consists of a 2-byte length field followed by the filter string. The filter-string length must not exceed the length of the profile name as it is specified in the class-descriptor table.

Generic characters have special meaning when used as part of the filter string. Even when profiles do not allow an asterisk (*) in the high-level qualifier, the FILTER operand does allow it.

- % (character in a name)

  You can use the percent sign to represent any **one character** in the profile name, including a generic character. For example, if you specify DASD%% as a filter string, it can represent profile names such as DASD01, DASD2A, and DASD%5. If you specify %%%%% as a filter string, it can represent profile names such as DASD1, DASD2, DASD%, TAPE%, MY%%%, TAPE* and %%%%*.
- * (0 through *n* characters in a qualifier)

  You can use a single asterisk to represent **zero or more characters** in a qualifier, including generic characters. For example, AB*.CD can represent profile names such as AB.CD, ABEF.CD, and ABX.CD. A single asterisk can also represent an entire qualifier. For example, ABC.* represents profile names such as ABC.D, ABC.DEF, ABC.%%%, and ABC.%/DE.
- ** (0 through *n* qualifiers in a name)

  You can use a double asterisk to represent **zero or more qualifiers** in the profile name. For example, AB.**.CD represents profile names such as AB.CD, AB.DE.EF.CD, and AB.XYZ.CD. You cannot specify other characters with ** within a qualifier. For example, you can specify USER1.**, but not USER1.A**.

Notes:

1. To specify the filter function, you must also specify RELEASE=1.9 or a later release number.
2. You cannot specify FILTER with LIST on the same invocation, because the two keywords are mutually exclusive.
3. You can specify the FILTER keyword with ENVIR=CREATE. If you specify ENVIR=DELETE, RACROUTE REQUEST=LIST returns a return code of 18.
4. You cannot specify the FILTER keyword with GLOBAL=YES.
5. The filter string is case sensitive. Be sure to take this into account when processing mixed-case classes (those specified in the class descriptor table with CASE=ASIS).

,GLOBAL=NO
,GLOBAL=YES

specifies whether or not RACF uses a data space for storage of RACLISTed profiles. To use this keyword, you must also specify RELEASE=2.1 or later.

NO The request uses local private storage for RACLIST profile lists

YES Allows profiles to be shared globally in a data space. One of the following occurs:

- If profiles already exist in a data space created by SETROPTS RACLIST or by RACROUTE REQUEST=LIST,GLOBAL=YES, RACF obtains an ALET in order to use the existing data space.
- If profiles do not exist in a data space and the RACGLIST class is active, and RACF-created RACGLIST profiles exist on the RACF database, that is, *classname_nnnnn*, then RACROUTE REQUEST=LIST,GLOBAL=YES creates a data space for the specified class using the RACF-created RACGLIST profiles rather than the original class profiles.
- If profiles do not exist in a data space, the RACGLIST class is active and the RACGLIST classname profile exists on the RACF database, but no RACF-created RACGLIST profiles exist, then RACF does normal RACLIST processing using the original class profiles, and copies the results into a data space. Additionally, the results of this RACLIST are copied back out to the RACF database in the RACGLIST profiles. For example, *classname_00001, classname_00002*.
- If profiles do not exist in a data space and the RACGLIST class is not active, or if it is active but no RACGLIST classname profile exists on the RACF database, RACF does normal RACLIST processing using the original class profiles and copies the results into a data space.

Once created, the RACLIST data space can be refreshed when appropriate by a SETROPTS RACLIST (classname) REFRESH command. The classes processed by this command are not only the classes specified on the command, but every valid class that shares the same POSIT as the class specified.

SETROPTS LIST can be used to determine which classes have been RACLISTed by this means. Even though the class was not RACLISTed, the fact that it was RACLISTed with GLOBAL=YES means that it has an affect across more than one application since subsequent applications issuing RACROUTE, REQUEST=LIST, ENVIR=CREATE,

GLOBAL=YES simply uses the already existing data space. A new line has been added to SETROPTS LIST output to show classes that have been RACLISTed solely by this means:

```
GLOBAL=YES RACLIST ONLY =
```

The SETROPTS NORACLIST (classname) command can be used to delete the RACLIST data space, but should not be issued until all of the applications that accessed the data space by issuing a RACROUTE REQUEST=LIST, ENVIR=CREATE, GLOBAL=YES have relinquished their access by issuing RACROUTE REQUEST=LIST ENVIR=DELETE requests. As with SETR RACLIST REFRESH, the SETR NORACLIST command processes not only the class specified on the command, but all the valid classes sharing the same POSIT.

Notes:

1. To use GLOBAL=YES, you must use RACROUTE and you must specify RELEASE=2.1 or later.
2. You cannot specify FILTER or LIST with GLOBAL=YES.
3. You can use this operand with ENVIR=CREATE. If you specify GLOBAL=YES with ENVIR=DELETE, RACF ignores the GLOBAL operand.
4. GLOBAL=YES allows RACROUTE REQUEST=FASTAUTH to run in AR mode in order to access profiles in a data space.
5. GLOBAL=YES is ignored by RACF releases earlier than RACF 2.1 or when RACF 2.1 is run on MVS/ESA SP 4.2.0.
6. When GLOBAL=YES is specified, SETROPTS RACLIST(*classname*) REFRESH must be issued by the security administrator to cause updated profiles to be loaded. The application cannot get updated profiles loaded by issuing RACROUTE REQUEST=LIST,ENVIR=DELETE followed by another RACROUTE REQUEST=LIST,ENVIR=CREATE,GLOBAL=YES. The process of refreshing by SETROPTS is transparent to the application. That is, the application can continue to issue RACROUTE REQUEST=FASTAUTH or RACROUTE REQUEST=AUTH while the refresh operation is in progress.
7. Applications can determine whether GLOBAL=YES is supported by checking flag bit RCVTGLBL in the RCVT data area.

,INSTLN=*parm list addr*

specifies the address of an area that contains parameter information for the RACROUTE REQUEST=LIST installation exit. The address is passed to the installation exit when the exit is given control by the RACROUTE REQUEST=LIST routine. The INSTLN parameter can be used by an application or an installation program to pass information to the RACROUTE REQUEST=LIST installation exit.

,LIST=*addr*

specifies the address of a list of resource names for which RACROUTE REQUEST=LIST is to build the in-storage profiles. The list consists of a 2-byte field containing the number of the names in the list, followed by one or more variable-length names. Each name consists of a 1-byte length field, which is the length of the name, followed by the name. A zero in the 2-byte field causes the operand to be omitted.

If LIST= and FILTER= are omitted, in-storage profiles are built for all the profiles defined to RACF in the given class as well as each member for a resource grouping associated with the specified class.

Notes:

1. This operand can be specified with ENVIR=CREATE. If ENVIR=DELETE is specified, the RACROUTE REQUEST=LIST macro issues a return code of 18.
2. You cannot specify the LIST keyword with GLOBAL=YES.

,LOC=ANY
,LOC=ABOVE

specifies whether the RACROUTE REQUEST=LIST profiles for GLOBAL=NO or the class tree anchor element for GLOBAL=YES are to reside where the ACEE is located, above or below 16MB (LOC=ANY), or whether the RACROUTE REQUEST=LIST profiles for GLOBAL=NO or the class tree anchor element for GLOBAL=YES are to reside above 16MB (LOC=ABOVE), if possible, even if the ACEE is below 16MB.

Note: LOC=ANY does not guarantee that storage is allocated above 16MB. If any installation SAF or RACF exit routines execute in 24-bit mode, the storage is below 16MB.

,OWNER=YES
,OWNER=NO

specifies that the resource owner is to be placed in the profile access list with the ALTER authority. If the OWNER= operand is omitted, the default is NO.

,SUBPOOL=(*sub#1,sub#2***)**

specifies the subpool numbers of the storage into which the components of the in-storage profiles are to be built with GLOBAL=NO. Sub#1 represents the subpool of the profile proper. Sub#2 represents the subpool of the profile index.

If the subpools are not specified, they default to subpool 255. Registers can also be used to specify sub#1 and sub#2. In that case, the low-order byte in the register is the subpool value.

Notes:

1. The subpool parameter is intended to be used when profiles are loaded into local storage through GLOBAL=NO. Therefore, if you use GLOBAL=YES to load profiles into a data space, the subpool information is not applicable.
2. Take some care in selecting a subpool, as MVS makes certain assumptions about subpool usage and characteristics. In particular, using subpool 0 or 250, or any subpool documented in the *z/OS MVS Programming: Assembler Services Guide* as having a storage key of USER (for example, 227-231, and 241) can give unpredictable results.

   In choosing a subpool, be aware that the storage obtained is attached to MVS control blocks, so subpool characteristics need to be considered. For example, storage obtained by RACROUTE REQUEST=LIST is attached to the ACEE. If the storage for this ACEE is in subpool 255, it exists until a RACROUTE REQUEST=VERIFY, ENVIR=DELETE is issued to delete the ACEE. However, if the wrong subpool is chosen, the RACROUTE REQUEST=LIST storage might already have been freed (for example, during step termination), so the ACEE points to storage that is no longer available.
3. If a common-area subpool (for example 226-228, 231, 239, 241, 245, 247, or 248) is used and not freed before the job terminates, then the job might show up in the exception reports of RMF (or other monitoring tools that support the tracking of common-area storage utilization) as owning common storage. Before your job terminates, it should issue a RACROUTE REQUEST=LIST, ENVIR=DELETE to free this common storage.

,MF=S
specifies the standard form of the RACROUTE REQUEST=LIST macro instruction.

Return codes and reason codes

When you execute the macro, space for the RACF return code and reason code is reserved in the first two words of the RACROUTE parameter list. You can access them using the ICHSAFP mapping macro, by loading the ICHSAFP pointer with the label that you specified on the list form of the macro. When control is returned, register 15 contains the SAF return code.

> **Note to Reader**
> All return and reason codes are shown in hexadecimal. Also, please note that SAF return code is presented as SAF RC and RACF return code is presented as RACF RC in the following section.

SAF RC	Meaning
00	RACROUTE REQUEST=LIST completed successfully.

RACF RC	Meaning
00	RACROUTE REQUEST=LIST function completed successfully.

Reason Code	Meaning
00	Delete request successful. Create request was successful, and profiles were brought into storage.
04	Create request successful, but no profiles were brought into storage. Valid only for GLOBAL=NO requests.

SAF RC	Meaning
04	The requested function could not be performed.

RACF RC	Meaning
00	No security decision could be made.

Reason Code	Meaning
00	The RACF router was not loaded; the request, resource, subsystem, class combination could not be found in the RACF ROUTER table; no successful exit processing can take place.

RACF RC	Meaning
08	The specified class is not defined to RACF, and the router table was bypassed due to DECOUPL=YES.
10	RACF or the resource class, or both, are not active.
14	RACLIST installation-exit error occurred.

SAF RC	Meaning
08	The requested function failed.

RACF RC	Meaning
04	Unable to perform the requested function.

Reason Code	Meaning
00	Unable to establish an ESTAE environment.
01	The function code (the third byte of the parameter list) does not represent a valid function. 01 represents the RACF manager; 02 represents the RACROUTE REQUEST=LIST macro.

0C An error was encountered during RACROUTE REQUEST=LIST processing.

18 Parameter list error.

Reason Code	Meaning
00	No ACEE found.
04	Class already RACLISTed.
08	Name length in list of names is not valid.
0C	LIST or FILTER specified on DELETE request.
10	Request type is not valid (not DEFINE or DELETE).
14	LIST and FILTER specified (they are mutually exclusive).
18	LIST or FILTER specified with GLOBAL=YES.

1C RACF is not installed or an insufficient level of RACF is installed.

20 Filter sequence not valid.

24 REQUEST=LIST failed to return a dataspace.

Reason Code	Meaning
00	Indicates one of the following: • attempt to RACLIST regular class profiles from the RACF database failed, or • attempt to use an existing data space was unsuccessful.

64 Indicates that the CHECK subparameter of the RELEASE keyword was specified on the execute form of the RACROUTE REQUEST=LIST macro; however, the list form of the macro does not have the same RELEASE parameter. Macro processing terminates.

Note: If the resource class specified by the CLASS= operand is inactive, RACROUTE REQUEST=LIST does not build the in-storage profiles and a code of 0C is returned. If the resource group class is not active, RACROUTE REQUEST=LIST builds an in-storage profile but only from the individual resource profiles; resource-group profiles are ignored.

Example 1

Operation: Use the standard form of the macro to build in-storage profiles for all the profiles in the APPCLU, and chain them off the ACEE whose address is pointed to by ACEEADDR.

```
RACROUTE REQUEST=LIST,CLASS='APPCLU',ACEE=ACEEADDR,          X
         ENVIR=CREATE,WORKA=RACWK
     .
     .
     .
RACWK    DS  CL512
```

Example 2

Operation: Use the standard form of the macro to build in-storage profiles for all the profiles whose names are in a list named PROFLIST and in the APPCLU class. Chain them from the task ACEE or address space ACEE.

```
RACROUTE REQUEST=LIST,CLASS='APPCLU',LIST=PROFLIST,       X
         ENVIR=CREATE,WORKA=RACWK
  .
  .
PROFLIST  DS  0CL58
PROFNUM   DC  XL2'0004'
PROF1     DC  AL1(12),CL12 'NETA.LU1.LU2'
PROF2     DC  AL1(12),CL12 'NETB.LU1.LU2'
PROF3     DC  AL1(14),CL14 'NETONE.LUA.LUB'
PROF4     DC  AL1(14),CL14 'NETTWO.LUA.LUB'
RACWK     DC  CL512
```

Example 3

Operation: Use the standard form of the macro to delete the in-storage profiles for the APPCLU class.

```
RACROUTE REQUEST=LIST,CLASS='APPCLU',ENVIR=DELETE,WORKA=RACWK
   .
   .
   .
RACWK    DS  CL512
```

Example 4

Operation: Use the standard form of the macro to build in storage all the profiles in the specified class that match the filter string.

```
RACROUTE REQUEST=LIST,CLASS='APPCLU',ENVIR=CREATE     X
         FILTER=FILTR,RELEASE=1.9.2.WORKA=RACWK
  .
  .
FILTR     DS  0CL14
FILTRL    DC  XL2'000C'
FILTRT    DC  CL12 'NET*.LU*.LU*'
RACWK     DS  CL512
```

Example 5

Operation: Use the standard form of the macro to load profiles into a data space, or attach to an existing data space if there is one, for the TCICSTRN class:

```
RACROUTE REQUEST=LIST,ENVIR=CREATE,CLASS='TCICSTRN',          X
         GLOBAL=YES,RELEASE=2.1,WORKA=RACRWRKA,MF=S
  .
  .
RACRWRKA DS     128F
```

RACROUTE REQUEST=LIST (list form)

The list form of the RACROUTE REQUEST=LIST macro is written as follows. Refer to the Standard Form of the RACROUTE REQUEST=LIST macro to determine additional parameters that are required by the time the RACROUTE service is invoked using the Execute form of the macro.

name	*name*: Symbol. Begin *name* in column 1.
b	One or more blanks must precede RACROUTE.
RACROUTE	
b	One or more blanks must follow RACROUTE.
REQUEST=LIST	
,ACEE=*acee addr*	*acee addr*: A-type address
,APPL=*'applname'* ,APPL=*applname addr*	*applname*: 1-8 character name *applname addr*: A-type address
,CLASS=*'class name'* ,CLASS=*class name addr*	*class name*: 1-8 character name *class name addr*: A-type address
,ENVIR=CREATE ,ENVIR=DELETE	**Default:** ENVIR=CREATE
,FILTER=*filter addr*	*filter addr*: A-type address
,GLOBAL=YES ,GLOBAL=NO	**Default:** GLOBAL=NO
,INSTLN=*parm list addr*	*parm list addr*: A-type address
,LIST=*list addr*	*list addr*: A-type address
,LOC=ANY ,LOC=ABOVE	**Default:** See parameter description.
,OWNER=YES ,OWNER=NO	**Default:** OWNER=NO
,SUBPOOL=(*sub#1,sub#2*)	*sub#1,sub#2*: Decimal digit 0-255 **Default:** SUBPOOL=255.
,MF=L	

The parameters are explained under the standard form of the RACROUTE REQUEST=LIST macro with the following exception:

,MF=L
specifies the list form of the RACROUTE REQUEST=LIST macro instruction.

RACROUTE REQUEST=LIST (execute form)

Refer to the Standard Form of the RACROUTE REQUEST=LIST macro to determine additional parameters that are required by the time the RACROUTE service is invoked using the Execute form of the macro.

The execute form of the RACROUTE REQUEST=LIST macro is written as follows.

name	*name*: Symbol. Begin *name* in column 1.
b	One or more blanks must precede RACROUTE.
RACROUTE	
b	One or more blanks must follow RACROUTE.
REQUEST=LIST	
,ACEE=*acee addr*	*acee addr*: Rx-type address or register (2) - (12)
,APPL=*applname addr*	*applname addr*: Rx-type address or register (2) - (12)
,CLASS=*class name addr*	*class name addr*: Rx-type address or register (2) - (12)
,ENVIR=CREATE ,ENVIR=DELETE	
,FILTER=*filter addr*	*filter addr*: Rx-type address or register (2) - (12)
,GLOBAL=YES ,GLOBAL=NO	**Default:** GLOBAL=NO
,INSTLN=*parm list addr*	*parm list addr*: Rx-type address or register (2) - (12)
,LIST=*list addr*	*list addr*: Rx-type address or register (2) - (12)
,LOC=ANY ,LOC=ABOVE	

,OWNER=YES ,OWNER=NO	
,RELEASE=*number* ,RELEASE=(,CHECK) ,RELEASE= (*number*,CHECK)	*number*: See Standard Form **Default:** RELEASE=1.6
,SUBPOOL=(*sub#1,sub#2*)	*sub#1,sub#2*: Decimal digit 0-255
,MF=(E,,*ctrl addr*)	*ctrl addr*: Rx-type address or register (2) - (12)

The parameters are explained under the standard form of the RACROUTE REQUEST=LIST macro with the following exceptions:

,RELEASE=*number*
,RELEASE=(,CHECK)
,RELEASE=(*number***,CHECK)**
specifies the RACF release level of the parameter list to be generated by this macro.

To use the parameters associated with a release, you must specify the number of that release or a later release number. If you specify a parameter with an incompatible release level, the parameter is not accepted by macro processing.

When you specify the RELEASE keyword, checking is done at assembly time. Compatibility between the list and execute forms of the RACROUTE REQUEST=LIST macro is validated at execution time if you specify the CHECK subparameter on the execute form of the macro.

The size of the list form expansion must be large enough to accommodate all parameters defined by the RELEASE keyword on the execute form of the macro. Otherwise, when CHECK processing is requested, the execute form of the macro is not done, and a return code of X'64' is returned.

,MF=(E,*ctrl addr***)**
specifies the execute form of the RACROUTE REQUEST=LIST macro instruction, using a remote, control-program parameter list.

RACROUTE REQUEST=LIST (modify form)

The modify form of the RACROUTE REQUEST=LIST macro is written as follows. Refer to the Standard Form of the RACROUTE REQUEST=LIST macro to determine additional parameters that are required by the time the RACROUTE service is invoked using the Execute form of the macro.

name	*name*: Symbol. Begin *name* in column 1.
b	One or more blanks must precede RACROUTE.
RACROUTE	

b	One or more blanks must follow RACROUTE.

REQUEST=LIST

,ACEE=*acee addr*	*acee addr*: Rx-type address or register (2) - (12)
,APPL=*applname addr*	*applname addr*: Rx-type address or register (2) - (12)
,CLASS=*class name addr*	*class name addr*: Rx-type address or register (2) - (12)
,FILTER=*filter addr*	*filter addr*: Rx-type address or register (2) - (12)
,GLOBAL=YES ,GLOBAL=NO	**Default:** GLOBAL=NO
,INSTLN=*parm list addr*	*parm list addr*: Rx-type address or register (2) - (12)
,ENVIR=CREATE ,ENVIR=DELETE	
,LIST=*list addr*	*list addr*: Rx-type address or register (2) - (12)
,LOC=ANY ,LOC=ABOVE	
,OWNER=YES ,OWNER=NO	
,SUBPOOL=(*sub#1,sub#2*)	*sub#1,sub#2*: Decimal digit 0-255
,MF=(M,*ctrl addr*)	*ctrl addr*: Rx-type address or register (2) - (12)

The parameters are explained under the standard form of the RACROUTE REQUEST=LIST macro with the following exceptions:

,MF=(M,*ctrl addr*)
specifies the modify form of the RACROUTE REQUEST=LIST macro instruction, using a remote, control-program parameter list.

This form of the RACROUTE REQUEST=LIST macro requires RELEASE=1.9 or later.

RACROUTE REQUEST=SIGNON: Manage PV signed-on lists

The RACROUTE REQUEST=SIGNON macro is used to provide management of the signed-on lists associated with persistent verification (PV), a feature of the APPC architecture of LU 6.2. The macro is intended for use in programs which implement the APPC LU persistent verification receive architecture; it is *not* required in applications which merely use APPC LU 6.2 functions.

Persistent verification is logon (signon) of a user from a remote LU which persists over multiple conversations. The signed-on lists are used to manage who is signed on using PV. The RACROUTE REQUEST=SIGNON macro is the interface provided to manage signed-on-from lists on MVS. The APPL, POE, GROUP, and USER keywords are used to uniquely identify entries in the signed-on-from list(s).

The caller can use RACROUTE REQUEST=SIGNON to:

- Create signed-on-from lists explicitly (TYPE=LSTCRT) or implicitly (TYPE=SIGNIN).
- Delete signed-on-from lists (TYPE=LSTDEL).
- Add a user to a list (TYPE=SIGNIN). A user should be authenticated using RACROUTE REQUEST=VERIFY before being added to a signed-on-from list.
- Delete a user from a list (TYPE=SIGNOFF).
- Query a list (TYPE=QSIGNON) to see if a specific user is present. If the user is signed on, a copy of the user's ACEE can be returned. In addition, the ENVROUT parameter can be used on a TYPE=QSIGNON request to obtain a relocatable user security environment that can be used on a subsequent RACROUTE REQUEST=VERIFY to provide "fastpath" user security environment (ACEE) re-creation.

One benefit of persistent verification is a reduction in the number of APPLAUDIT audit records created for a user issuing APPC transactions. Without PV, when you audit user verification for a user submitting APPC transactions, a pair of audit records is written for each transaction. With PV, only two records are written for the same user— one for the user's initial verification, and another when the user's PV session ends. Refer to the description of the ENVRIN keyword parameter for implementation details. Refer to *z/OS Security Server RACF Auditor's Guide* for a discussion of SETROPTS APPLAUDIT option.

RACROUTE REQUEST=SIGNON requires MVS/ESA 4.2.2 or later.

The caller of RACROUTE REQUEST=SIGNON is required to be AMODE(31), and must be in supervisor state and system key.

To use this service, you must specify RELEASE=1.9.2 or a later release number.

The caller cannot hold any locks.

All request types support task mode; in addition, the TYPE=LISTDEL request can be invoked in SRB mode.

RACF might return an ACEE and/or a TOKEN and/or an ENVROUT object storage area that resides above 16 megabytes.

RACROUTE REQUEST=SIGNON (standard form)

The standard form of the RACROUTE REQUEST=SIGNON macro instruction is written as follows. For a description of additional keywords that you can code and additional parameters that are required on the RACROUTE request, but that are not specific to this request type, see “RACROUTE (standard form)” on page 13.

Note

Application programs must be structured so that a task requesting RACF services does not do so while other I/O initiated by the task is outstanding. If such I/O is required, the task should either wait for the other I/O to complete before requesting RACF services, or the other I/O should be initiated under a separate task. This is necessary to assure proper processing in recovery situations.

name	*name* symbol. Begin *name* in column 1.
b	One or more blanks must precede RACROUTE
RACROUTE	
b	One or more blanks must follow RACROUTE
REQUEST=SIGNON	
,APPL=*'applname'*	*applname*: 1-8 character application name
,APPL=*applname addr*	*applname addr:* A-type address or register (2) - (12).
,POE=*port of entry addr*	*port of entry addr*: A-type address or register (2) - (12)
,POENET=*network name addr*	*network name addr*: A-type address or register (2) - (12)
,TYPE=LISTCRT ,TYPE=LISTDEL ,TYPE=SIGNIN ,TYPE=SIGNOFF ,TYPE=QSIGNON	
,LSTTYPE=ONFROM	**Default:** LSTTYPE=ONFROM
,MF=S	
,VERBEXIT=*address of fullword*	*exit addr*: A-type address or register (2) - (12)

If TYPE=SIGNIN is specified:

,USERID=*userid addr*	*userid addr*: A-type address or register (2) - (12)
,ENVRIN=*envr data addr*	*envr data addr*: A-type address or register (2) - (12)
,GROUP=*group addr*	*group addr*: A-type address or register (2) - (12)
,SECLABL=*seclabel addr*	*seclabel addr*: A-type address or register (2) - (12)
,VERBEXIT=*address of fullword*	*address of fullword*: A-type address or register (2) - (12)

If TYPE=SIGNOFF is specified:

,USERID=*userid addr*	*userid addr*: A-type address or register (2) - (12)
,GROUP=*group addr*	*group addr*: A-type address or register (2) - (12)
,SECLABL=*seclabel addr*	*seclabel addr*: A-type address or register (2) - (12)
,VERBEXIT=*address of fullword*	*address of fullword*: A-type address or register (2) - (12) **Note:** This keyword is required on or before TYPE=SIGNOFF. Refer to VERBEXIT keyword description for more information.

fullword

If TYPE=QSIGNON is specified:

,USERID=*userid addr*	*userid addr*: A-type address or register (2) - (12)
,ACEE=*address of fullword*	*address of fullword*: A-type address or register (2) - (12)
,ENVROUT=*envr data addr*	*envr data addr*: A-type address or register (2) - (12)
,GROUP=*group addr*	*group addr*: A-type address or register (2) - (12)

,SECLABL=*seclabel addr* *seclabel addr*: A-type address or register (2) - (12)

,TOKNOUT=*utoken addr* *utoken addr*: A-type address or register (2) - (12)

The parameters are explained as follows:

,ACEE=*address of fullword*
specifies the address of a fullword where a QSIGNON request is to store an ACEE pointer for a signed-on user. If the keyword is omitted (or zero), an ACEE is not returned. The caller is responsible for doing a RACROUTE REQUEST=VERIFY, ENVIR=DELETE to delete a returned ACEE when no longer needed.

,APPL=*'applname'*
,APPL=*applname addr*
specifies the local LU name. The local LU name is an 8-character field which is left-justified and padded with blanks.

The APPL name is part of the key that uniquely identifies which signed-on list entries are being processed.

Note that an asterisk (*) should not be specified for the APPL name. It is not treated as a generic character, and will not match the application name when used in the key.

The maximum number of APPL names that RACF supports in the signed-on lists is 39.

,ENVRIN=*envr data addr*
specifies the data structure that contains the information required to re-create a security environment. The address points to a data structure defined in Table 6 on page 167. See also the mapping for "SGNPL: RACROUTE REQUEST=SIGNON Parameter List (Request Section)" in *z/OS Security Server RACF Data Areas*. The data structure describes the storage location for the ENVR object. While the format of the data structure pointed to by ENVRIN is known to the RACROUTE invoker, the content of the object itself is defined by the external security product.

The ENVRIN keyword is provided to pass in a relocatable security environment or to manipulate a user security environment. You can specify ENVRIN on a RACROUTE REQUEST=SIGNON, TYPE=SIGNIN to mark a security environment so that future RACROUTE REQUEST=VERIFY, ENVIR=DELETE requests of that user security environment do not get audited.

To use ENVRIN on a RACROUTE REQUEST=SIGNON, TYPE=SIGNIN you must have previously obtained a relocatable user security environment by specifying ENVROUT on a prior service such as RACROUTE REQUEST=VERIFY, ENVIR=CREATE, or RACROUTE REQUEST=EXTRACT,TYPE ENVRXTR.

,ENVROUT=*envr data addr*
specifies the data structure that is to hold the information used to describe a security environment. This information can be used later on a service with the ENVRIN keyword such as RACROUTE REQUEST=VERIFY to recreate the security environment without causing I/O to the RACF Database. The address

points to a data structure defined in Table 6. The data structure describes the storage location for the ENVR object. While the format of the data structure pointed to by ENVROUT is known to the RACROUTE invokers, the content of the object itself is defined by the external security product.

Figure 4 and Table 6 represent the ENVR data structure for use with the ENVRIN and ENVROUT keywords. The data structure must start on a fullword boundary.

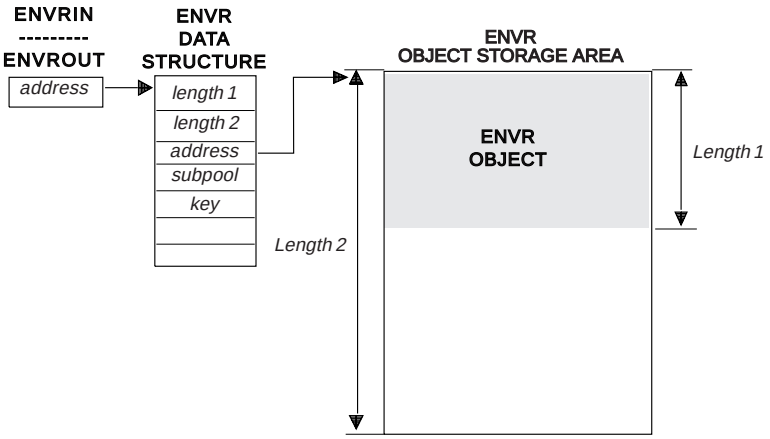

Figure 4. ENVR Data Structure

Table 6. Description of ENVR Data Structure

Description	Length (Bytes)	ENVROUT Usage	ENVRIN Usage
ENVR Object Length	4	Output	Input
ENVR Object Storage Area Length	4	Input/Output	Input
ENVR Object Storage Area Address	4	Input/Output	Input
ENVR Object Storage Area Subpool	1	Input	N/A
ENVR Object Storage Area Key	1	Input	N/A

The ENVR object storage area can be supplied by the caller or obtained by RACF. If supplied by the caller, it must be on a doubleword boundary and be associated with the job step task. If RACF obtains the storage area, it is on a doubleword boundary and is associated with the Job Step task. The storage will be allocated based on the mode of the caller (LOC=ANY for 31-bit callers and LOC=BELOW for 24-bit callers). The following table shows how the field values affect ENVROUT processing.

Table 7. ENVROUT Storage Area Processing

ENVR Object Storage Area Length	ENVR Object Storage Area Address	Result
Zero	Any Value	RACF obtains minimum storage size needed to contain the ENVR Object. Storage size is returned in the ENVR Object storage area length. Storage address is returned in the ENVR Object storage area address.

Table 7. ENVROUT Storage Area Processing (continued)

ENVR Object Storage Area Length	ENVR Object Storage Area Address	Result
Nonzero	Zero	RACF obtains storage size specified or the minimum storage size needed to contain the ENVR Object. Storage size is returned in the ENVR Object storage area length. Storage address is returned in the ENVR Object storage area address.
Nonzero	Nonzero	RACF attempts to use the storage area provided. If the area is too small to contain the ENVR object, RACF frees the storage area provided and obtains the minimum storage size needed to contain the ENVR object. Storage size is returned in the ENVR object storage area length. Storage address is returned in the ENVR object storage area address.

Storage is obtained and freed in the subpool and key specified in the ENVR data structure.

Since the ENVR object length is returned to the caller, the ENVR object can be moved from one storage area to another. This value is supplied as an output to the caller. RACF does not attempt to use this value in either ENVROUT or ENVRIN processing.

The caller is responsible for freeing the ENVR object storage area when it is no longer needed. The length, address, subpool, and key to be used when doing the FREEMAIN are contained in the ENVR data structure.

The ENVR object returned by ENVROUT= is a relocatable object that can be copied from one storage location to another. The returned ENVR object, or a copy of the returned ENVR object, can be specified as input to the RACROUTE interface using the ENVRIN keyword, or to the initACEE callable service using the ENVR_in parameter.

The ENVR object can be passed to other systems, but this should be done with great care. The ENVR object should not be saved for a long period of time before being used as ENVRIN, and it should not be passed to systems that have different security information. The other systems should share the RACF database and have compatible RACF installation exits and class descriptor tables.

,GROUP=*address*

specifies the group provided by the user who has entered the system. The address points to a 1-byte length field, followed by the group name which can be up to eight characters.

The GROUP name is part of the key which uniquely identifies which signed-on list entries are being processed.

Notes:

1. For TYPE=SIGNIN, if GROUP is not specified, the signed-on list entry contains blanks in the GROUP field.

2. For TYPE=SIGNOFF, if GROUP is not specified, the value used to match entries in the signed-on-from list is defaulted to blanks.
3. For TYPE=SIGNOFF, the GROUP name can be specified as ***** to indicate a "don't care" condition that allows a match with any GROUP name in the list. All entries matching USERID are removed from the signed-on list regardless of GROUP.

,LSTTYPE=ONFROM
specifies that you are requesting the operation for the signed-on-from list.

Although LSTTYPE has a default of ONFROM, you should specify this keyword since omitting it causes an MNOTE and an assembler return code of 4.

,POE=*port-of-entry address*
specifies the address of the port of entry into the system. The address points to the partner LU name. The port of entry is an 8-character field which is left-justified and padded with blanks.

The POE name is part of the key which uniquely identifies which signed-on list entries are being processed.

Note: For LISTDEL and SIGNOFF, the POE name can be specified as *****; this indicates a "don't care" condition that allows a match with any POE name in the list.

,POENET=*network name address*
specifies the address of a structure that consists of a 1-byte length field followed by up to an 8-byte field containing the network name of the partner LU. When specified with the POE parameter, the value specified for POENET is combined with the value specified for POE to create a network qualified name in the form *netid.luname*. The network qualified LU name is then used as the POE value during further processing. Note that an asterisk (*) should not be specified for POENET as it is not treated as a generic character and results in an incorrect network qualified LU name. To specify the POENET parameter, you must specify RELEASE=2.6.

,SECLABL=*address*
specifies the address of an 8-byte field which contains the user's security label. The field is left-justified and padded to the right with blanks.

Note: If SECLABL is not specified, the signed-on list entry contains blanks in the SECLABL field.

,TOKNOUT=*address*
specifies the address of a user-provided area in which an output UTOKEN is to be built. The UTOKEN along with the APPL parameter can be used on a subsequent RACROUTE REQUEST=VERIFY, ENVIR=CREATE to re-create the security environment. However, using ENVROUT to obtain a copy of the security environment and then using ENVRIN to provide this security environment on a subsequent RACROUTE REQUEST=VERIFY provides better performance if the requirements for using ENVRIN are met.

,TYPE=LISTCRT
,TYPE=LISTDEL
,TYPE=SIGNIN
,TYPE=SIGNOFF
,TYPE=QSIGNON
specifies the action to be performed for the specified APPL and POE.

LISTCRT
Create and initialize a signed-on-from list to represent users signed on from a specified POE to a specified APPL; use of LISTCRT is optional, as SIGNIN can perform this function automatically.

LISTDEL
Delete a signed-on-from list. TYPE=LISTDEL can be called while running in SRB mode.

QSIGNON
Determine if the specified user is in the signed-on-from list and optionally return data using the ACEE, ENVROUT, and TOKNOUT keywords.

SIGNIN
Add a user to the signed-on-from list; additionally, if no signed-on-from list exists for the specified APPL and POE, SIGNIN creates and initializes one.

This allows signed-on-from lists to be created implicitly (on the first TYPE=SIGNIN request), or explicitly (using TYPE=LSTCRT).

SIGNOFF
Remove users from signed-on-from lists associated with the specified APPL.

The following table indicates the various combinations you can specify to remove entries from the signed-on-from list(s). On the TYPE=SIGNOFF request, for the POE, USERID, and GROUP keywords you can do one of the following:
- Specify the keyword with an exact value.
- Specify the keyword as ***** (“don’t care.”).

In the following table, **M** indicates the keyword was specified with an exact value (which would be blanks for the GROUP keyword if it is not specified); ***** indicates that all values for that keyword are considered a match.

Table 8. Delete Actions Based on Input Supplied.

POE or POENET.POE	USERID	GROUP	DELETES...
*	*	*	ALL entries
*	*	M	Entries matching GROUP
*	M	*	Entries matching USERID
*	M	M	Entries matching USERID and GROUP
M	*	*	Entries matching POE
M	*	M	Entries matching POE and GROUP
M	M	*	Entries matching POE and USERID
M	M	M	Entries matching POE, USERID and GROUP

,USERID=*address*
specifies the user identification of the user who has entered the system. The address points to a 1-byte length field, followed by the user ID which can be up to eight characters.

The value of USERID is part of the key which is used to uniquely identify which signed-on list entries are being processed.

Note: For TYPE=SIGNOFF, USERID can be specified as ***** to indicate a “don’t care” condition that allows a match with any USERID in the list. All entries matching GROUP are removed from the signed-on list regardless of USERID.

,VERBEXIT=*address of fullword*
specifies the address of an address of a user exit routine which receives control from RACF during SIGNOFF processing. The user exit is responsible for issuing the ALLOCATE of the SIGNOFF TP for the partner LU. When the user exit receives control from RACF, register 1 points to a parameter list mapped by ICHSGX1P, the mapping macro for the TYPE=SIGNOFF VERBEXIT. See “SGX1P: RACROUTE REQUEST=SIGNON Parameter List Mapping” in *z/OS Security Server RACF Data Areas*.

RACROUTE REQUEST=SIGNON, TYPE=SIGNOFF processing expects to pass control to a VERBEXIT. You can supply the VERBEXIT when the signed-on list is initially created or on a TYPE=SIGNOFF request; if specified on both, the VERBEXIT specified with TYPE=SIGNOFF is used.

If no exit address (or an address of zero) is passed, the signoff routine for the partner LU can not be invoked. The RACROUTE return code (08,10,30) indicates a failure. However, the entries are deleted from the list.

,MF=S
specifies the standard form of the RACROUTE REQUEST=SIGNON macro instruction.

Return codes and reason codes

When control is returned, space for the return code and reason code is reserved in the first two words of the RACROUTE parameter list. You can use the ICHSAFP mapping macro to access them by loading the ICHSAFP pointer with the label that you specified on the execute form of the macro. When control is returned, register 15 contains the SAF return code.

If the “don’t care” character is specified in one or more keywords on a SIGNOFF *and* you encounter an internal error reason code, it might be possible that all user entries matching your keyword specification were not deleted. This can be verified using RACF’s DISPLAY SIGNON operator command. If you find you still have user entries to delete, you might want to rerun the request, try RACF’s SIGNOFF operator command, or try the request multiple times for specific user entries. If these still do not remove your user entries, you first need to work with the IBM support center to resolve the underlying problem.

Note to Reader

All return and reason codes are shown in hexadecimal. Also, please note that SAF return code is presented as SAF RC and RACF return code is presented as RACF RC in the following section.

SAF RC	Meaning
00	RACROUTE REQUEST=SIGNON has completed successfully

RACF RC	Meaning

00 The RACROUTE REQUEST=SIGNON function was performed.

Reason Code	Meaning
00	Indicates a normal completion.
04	TYPE=SIGNOFF requested, user not found for specified port of entry.
08	TYPE=LISTDEL requested, list not found.
0C	TYPE=LISTCRT requested, list already exists.
10	TYPE=SIGNIN requested, user already signed on.
14	TYPE=LISTDEL requested, error physically deleting list(s). Data space storage could not be freed but RACF considers the list to be deleted.

04 Requested function could not be completed. No RACF decision.

RACF RC	Meaning
00	RACF could not process RACROUTE REQUEST=SIGNON request.

Reason Code	Meaning
00	Any of the following has occurred: • Environment is not MVS/ESA 4.2.2 or later. • RACF is not installed. • A version of RACF earlier than 1.9.2 is installed. • RACF is not active.

04 RACF could not complete processing of SIGNON request. If the reason code indicates an internal error, contact your support center.

Reason Code	Meaning
04	Unable to establish recovery or an abend occurred.
08	RACF subsystem initialization problem. One of the following has occurred. • RACF subsystem not started at IPL, • RACF subsystem failed to initialize correctly, or • RACF subsystem was abnormally stopped.
0C	Internal error: Null ID found.
10	STORAGE PROBLEM—The

	underlying data space storage management request failed.
14	STORAGE UNAVAILABLE—No more data space storage available for expanding the PV list.
18	Internal error: INVALID LENGTH Exception
1C	Internal error: INCONSISTENCY Exception 1.
24	Internal error: INCONSISTENCY Exception 2.
28	Internal error: OPERATION REJECTED Exception.
2C	Internal error: INVALID CONTROL DATA Exception.
34	Local lock was held by invoker.
38	Lock prematurely released, (i.e. not by obtainer).
3C	Internal error: Unexpected Exception.
40	Internal error: INVALID OFFSET Exception.
44	Internal error: INVALID KEY DEFINITION Exception.
48	Exceeded maximum number of APPL names for the signed-on lists.

08 Requested function has failed.

RACF RC	Meaning
08	User information not returned on a TYPE=QSIGNON request.

Reason Code	Meaning
04	User not found in signed-on list.

RACF RC	Meaning
0C	The VERBEXIT returned a nonzero return code. RACF has propagated the return code (*xx*) back to the caller as a reason code.

Reason Code	Meaning
xx	Defined and documented by APPC/MVS VERBEXIT or other VERBEXIT being used. For possible values of *xx*, refer to documentation of VERBEXIT being used.

Note: List processing occurs before VERBEXIT processing. The user is deleted from the list prior to this failure.

10 Parameter list error

Reason Code	Meaning
04	No APPL LU name specified.
08	No POE LU name specified.
0C	Blank or null APPL LU name specified.
10	Blank or null POE LU name specified.
14	No TYPE was specified, or type was specified to the macro incorrectly.
18	USERID was not specified on a SIGNIN, SIGNOFF, or QSIGNON request.
1C	Blank or null USERID was specified on a SIGNIN, SIGNOFF, or QSIGNON request.
20	USERID length specified is not valid. The 1-byte length field specified was less than or equal to zero, or was greater than eight.
24	GROUP length specified is not valid. The 1-byte length field specified was less than or equal to zero, or was greater than eight.
28	The ENVR Object storage area address specified with the ENVRIN keyword is 0 (TYPE=SIGNIN), or the ENVR Object storage area address specified is not on a doubleword boundary (TYPE=SIGNIN or TYPE=QSIGNON).
2C	The length specified for the ENVR Object is greater than the length of the storage containing the ENVR Object for the ENVRIN keyword on a SIGNIN.
30	No VERBEXIT address found. The VERBEXIT must have been provided by the time the SIGNOFF is performed. Must be specified either when the list is initially created (by LISTCRT or SIGNIN), or on the SIGNOFF request. **Note:** List processing occurs before VERBEXIT

processing. The user is deleted from the list prior to this failure.

34 Either the POE, USERID, or GROUP keyword was incorrectly specified as ***** on a LISTCRT or a SIGNIN request. A “don’t care” character can only be specified on a SIGNOFF or LISTDEL request.

14 RACROUTE REQUEST=VERIFY error encountered during QSIGNON.

Reason Code	Meaning
XXXXYYYY	For the explanation of this reason code, refer to RACROUTE REQUEST=VERIFY “Return codes and reason codes” on page 231. Under SAF return code of X'08', see RACF return code *YYYY* and RACF reason code *XXXX*

Example 1

Operation: Sign a user into the signed-on-from list (Standard Form of the macro).

```
         RACROUTE REQUEST=SIGNON,                                      X
               RELEASE=1.9.2,                                          X
               WORKA=RACRWRKA,                                         X
               TYPE=SIGNIN,                                            X
               LSTTYPE=ONFROM,                                         X
               APPL=MYAPPL,                                            X
               POE=MYPOE,                                              X
               USERID=MYUSERID,                                        X
               GROUP=MYGROUP,                                          X
               ENVRIN=ENVRDATA,                                        X
               MF=S
```

Example 2

Operation: List form of a RACROUTE REQUEST=SIGNON.

```
LISTBEG  RACROUTE REQUEST=SIGNON,                                      X
               RELEASE=1.9.2,                                          X
               WORKA=RACRWRKA,                                         X
               TYPE=SIGNIN,                                            X
               LSTTYPE=ONFROM,                                         X
               APPL=MYAPPL,                                            X
               POE=MYPOE,                                              X
               USERID=MYUSERID,                                        X
               GROUP=MYGROUP,                                          X
               ENVRIN=ENVRDATA,                                        X
               MF=L
```

Example 3

Operation: Use QSIGNON to determine if a user is signed in, and if so, obtain an ENVROUT object (Execute form of the macro).

```
         RACROUTE REQUEST=SIGNON,                                      X
               RELEASE=1.9.2,                                          X
               WORKA=RACRWRKA,                                         X
               TYPE=QSIGNON,                                           X
               LSTTYPE=ONFROM,                                         X
               ENVROUT=ENVRDATA,                                       X
               MF=(E,LISTBEG)
```

```
                        DATA DECLARATIONS

            DS    0D
RACRWRKA    DC    128F'0'          512 BYTE RACROUTE WORK AREA
MYUSERID    DC    AL1(7)           LENGTH OF USERID
            DC    CL7'DANHERE'     THE ACTUAL USERID
MYGROUP     DC    AL1(6)           LENGTH OF GROUP NAME
            DC    CL6'DEPT52'      THE ACTUAL GROUP NAME
MYSECLABL   DC    CL8'SECRET'      SECURITY LABEL
MYTOKNOUT   DS    10D              80 BYTES FOR RETURNED TOKEN
MYVERBEXIT  DC    A(0)             ADDRESS OF VERBEXIT
MYPOE       DC    CL8'DANIWS'      PARTNER LU NAME
MYAPPL      DC    CL8'MVSHOST1'    LOCAL LU NAME
MYACEE      DC    A(0)             ADDRESS OF RETURNED ACEE
ENVRDATA    DS    0F
            DC    F'0'             ENVR LENGTH
            DC    F'4096'          DESIRED ENVR STORAGE AREA SIZE
            DC    A(0)             LET RACF OBTAIN IT
            DC    AL1(1)           IN SUBPOOL 1
            DC    AL1(1)           IN KEY 1
```

RACROUTE REQUEST=SIGNON (list form)

The list form of the RACROUTE REQUEST=SIGNON macro instruction is written as follows. Refer to the Standard Form of the RACROUTE REQUEST=SIGNON macro to determine additional parameters that are required by the time the RACROUTE service is invoked using the Execute form of the macro.

name — *name* symbol. Begin *name* in column 1.

b — One or more blanks must precede RACROUTE

RACROUTE

b — One or more blanks must follow RACROUTE

REQUEST=SIGNON

,TYPE=LISTCRT
,TYPE=LISTDEL
,TYPE=SIGNIN
,TYPE=SIGNOFF
,TYPE=QSIGNON

,POE=*port of entry addr* — *port of entry addr:* A-type address

,POENET=*network name addr* — *network name addr*: A-type address or register (2) - (12)

,APPL=*'applname'* — *applname:* 1-8 character name

,APPL=*applname addr* — *applname addr:* A-type address

Note: TYPE, POE and APPL are required on or before RACROUTE REQUEST=SIGNON is issued with MF=E.

,LSTTYPE=ONFROM — **Default:** LSTTYPE=ONFROM

,MF=*L*

If TYPE=LISTCRT is specified:

,VERBEXIT=*address of fullword* — *address of fullword:* A-type address

If TYPE=SIGNIN is specified:

,USERID=*userid addr* — *userid addr:* A-type address

,ENVRIN=*envr data addr* — *envr data addr:* A-type address

,GROUP=*group addr* — *group addr:* A-type address

,SECLABL=*seclabel addr* — *seclabel addr:* A-type address

,VERBEXIT=*address of fullword* — *address of fullword:* A-type address

If TYPE=SIGNOFF is specified:

,USERID=*userid addr* — *userid addr:* A-type address

,GROUP=*group addr* — *group addr:* A-type address

,SECLABL=*seclabel addr* — *seclabel addr:* A-type address

,VERBEXIT=*address of fullword:* — *address of fullword:* A-type address

If TYPE=QSIGNON is specified:

,USERID=*userid addr* — *userid addr:* A-type address

,GROUP=*group addr*	*group addr:* A-type address
,SECLABL=*seclabel addr*	*seclabel addr:* A-type address
,TOKNOUT=*utoken addr*	*utoken addr:* A-type address
,ACEE=*address of* ,*fullword*	*address of fullword:* A-type address
,ENVROUT=*envr data addr*	*envr data addr:* A-type address

The parameters are explained under the standard form of the SIGNON macro instruction with the following exception:

,MF =L
specifies the list form of the SIGNON macro instruction. The “L” form defines an area to be used for the parameter list.

RACROUTE REQUEST=SIGNON (execute form)

The execute form of the RACROUTE REQUEST=SIGNON macro instruction is written as follows. Refer to the Standard Form of the RACROUTE REQUEST=SIGNON macro to determine additional parameters that are required by the time the RACROUTE service is invoked using the Execute form of the macro.

name	*name* symbol. Begin *name* in column 1.
b	One or more blanks must precede RACROUTE
RACROUTE	
b	One or more blanks must follow RACROUTE

REQUEST=SIGNON

,TYPE=LISTCRT
,TYPE=LISTDEL
,TYPE=SIGNIN
,TYPE=SIGNOFF
,TYPE=QSIGNON

,POE=*port of entry addr*	*port of entry addr:* RX-type address or register (2) - (12)
,POENET=*network name addr*	*network name addr*: A-type address or register (2) - (12)
,APPL=*'applname'*	*applname:* 1-8 character name
,APPL=*applname addr*	*applname addr:* RX-type address or register (2) - (12) **Note:** TYPE, POE and APPL are required on or before RACROUTE REQUEST=SIGNON is issued with MF=E.
,LSTTYPE=ONFROM	
,MF=(E,*ctrl addr*)	*ctrl addr:* Rx-type address or register (1) or (2)-(12)

If TYPE=LISTCRT is specified:

,VERBEXIT=*address of fullword*	*address of fullword:* RX-type address or register (2) - (12

If TYPE=SIGNIN is specified:

,USERID=*userid addr*	*userid addr:* RX-type address or register (2) - (12)
,ENVRIN=*envr data addr*	*envr data addr:* RX-type address or register (2) - (12)
,GROUP=*group addr*	*group addr:* RX-type address or register (2) - (12)
,SECLABL=*seclabel addr*	*seclabel addr:* RX-type address or register (2) - (12)
,VERBEXIT=*address of fullword*	*address of fullword:* RX-type address or register (2) - (12

If TYPE=SIGNOFF is specified:

,USERID=*userid addr*	*userid addr:* RX-type address or register (2) - (12)
,GROUP=*group addr*	*group addr:* RX-type address or or register (2) - (12)
,SECLABL=*SECLABL addr*	*seclabl addr:* RX-type address or register (2) - (12)

,VERBEXIT=*address of fullword*	*address of fullword:* RX-type address or register (2) - (12)

If TYPE=QSIGNON is specified:

,USERID=*userid addr*	*userid addr:* RX-type address or register (2) - (12)
,GROUP=*group addr*	*group addr:* RX-type address or register (2) - (12)
,SECLABL=*seclabel addr*	*seclabel addr:* RX-type address or register (2) - (12)
,TOKNOUT=*utoken addr*	*utoken addr:* RX-type address or register (2) - (12)
,ACEE=*address of fullword*	*address of fullword:* RX-type address or register (2) - (12
,ENVROUT=*envr data addr*	*envr data addr*: RX-type address or register (2) - (12)

The parameters are explained under the standard form of the SIGNON macro instruction with the following exception:

,MF =(E,*ctrl addr***)**
specifies the execute form of the SIGNON macro where *ctrl addr* is the address of the associated parameter list.

RACROUTE REQUEST=SIGNON (modify form)

The modify form of the RACROUTE REQUEST=SIGNON macro instruction is written as follows. Refer to the Standard Form of the RACROUTE REQUEST=SIGNON macro to determine additional parameters that are required by the time the RACROUTE service is invoked using the Execute form of the macro.

name	*name:* symbol. Begin *name* in column 1.
b	One or more blanks must precede RACROUTE
RACROUTE	
b	One or more blanks must follow RACROUTE

REQUEST=SIGNON

,TYPE=LISTCRT
,TYPE=LISTDEL
,TYPE=SIGNIN
,TYPE=SIGNOFF
,TYPE=QSIGNON

,POE=*port of entry addr*	*port of entry addr:* RX-type address or register (2) - (12)
,POENET=*network name addr*	*network name addr*: A-type address or register (2) - (12)
,APPL=*'applname'*	*applname:* 1-8 character name
,APPL=*applname addr*	*applname addr:* RX-type address or register (2) - (12) **Note:** TYPE, POE, and APPL are required on or before RACROUTE REQUEST=SIGNON is issued with MF=E.

,LSTTYPE=ONFROM

,MF=(M,*ctrl addr*)

If TYPE=LISTCRT is specified:

,VERBEXIT=*address of fullword*	*exit addr:* RX-type address or register (2) - (12)

If TYPE=SIGNIN is specified:

,USERID=*userid addr*	*userid addr:* RX-type address or register(2) - (12)
,ENVRIN=*envr data addr*	*envr data addr*: RX-type address or register (2) - (12)
,GROUP=*group addr*	*group addr:* RX-type address or register (2) - (12)
,SECLABL=*seclabel addr*	*seclabel addr:* RX-type address or register (2) - (12
,VERBEXIT=*address of fullword*	*address of fullword:* RX-type address or register (2) - (12)

If TYPE=SIGNOFF is specified:

,USERID=*userid addr*	*userid addr:* RX-type address or register (2) - (12)
,GROUP=*group addr*	*group addr:* RX-type address or register (2) - (12)

,SECLABL=*seclabel addr*	*seclabel addr:* RX-type address or register (2) - (12)
,VERBEXIT=*address of fullword*	*address of fullword:* RX-type address or register (2) - (12)

If TYPE=QSIGNON is specified:

,USERID=*userid addr*	*userid addr:* RX-type address or register (2) - (12)
,GROUP=*group addr*	*group addr:* RX-type address or register (2) - (12)
,SECLABL=*seclabel addr*	*seclabel addr:* RX-type address or register (2) - (12
,TOKNOUT=*utoken addr*	*utoken addr:* RX-type address or register (2) - (12)
,ACEE=*address of fullword*	*address of fullword:* RX-type address or register (2) - (12)
,ENVROUT=*envr data addr*	*envr data addr*: RX-type address or register (2) - (12)

The parameters are explained under the standard form of the SIGNON macro instruction with the following exception:

,MF=(M,*ctrl addr***)**
specifies the modify form of the SIGNON macro. The “M” form generates code to put the parameters into the parameter list specified by *ctrl addr*, the address of the associated parameter list.

RACROUTE REQUEST=STAT: Determine RACF Status

The RACROUTE REQUEST=STAT macro determines if RACF is active and, optionally, determines whether a given resource class is defined to RACF. If a resource class name is defined to RACF, the macro also determines whether the class is active.

RACROUTE REQUEST=STAT is a branch-entered service that uses standard linkage conventions.

To use this service, you must also specify RELEASE=1.9 or a later release number.

RACROUTE REQUEST=STAT (standard form)

The standard form of the RACROUTE REQUEST=STAT macro is written as follows. For a description of additional keywords that you can code and additional parameters that are required on the RACROUTE request, but that are not specific to this request type, see “RACROUTE (standard form)” on page 13.

name	*name*: Symbol. Begin *name* in column 1.
b	One or more blanks must precede RACROUTE.
RACROUTE	
b	One or more blanks must follow RACROUTE.
REQUEST=STAT	
,CLASS=*‘class name’*	*class name*: 1-8 character class name
,CLASS=*class name addr*	*class name addr*: A-type address or register (2) - (12)
,COPY=*copy addr*	*copy addr*: A-type address or register (2) - (12)
,COPYLEN=*copy length*	*copy length*: length or register (2) - (12)
,ENTRY=*entry addr*	*entry addr*: A-type address or register (2) - (12)
,MF=S	

The parameters are explained as follows:

,CLASS=*‘class name’*
,CLASS=*class name addr*

specifies the class name for which RACF authorization checking is performed. The name can be explicitly defined on the macro by enclosing the name in quotes. If specified, the address must point to an 8-byte field containing the class name, left-justified and padded with blanks if necessary. If CLASS= is omitted, the status of RACF is returned.

The class name specified must be a general resource defined to RACF in the class descriptor table. For more information, see Appendix E, “IBM-supplied class descriptor table entries” on page 401.

Note: The classes DATASET, USER, and GROUP are not in the class descriptor table.

,COPY=

specifies the address, or register containing the address, of storage obtained by the caller. It is the responsibility of the caller to obtain this storage before the RACROUTE REQUEST=STAT call and to free it when it is no longer needed.

On return from the macro request, the storage area contains a copy of the class entry from the class-descriptor table mapped by ICHPCNST.

,COPYLEN=

specifies the length, or a register containing the length, of the COPY area requested.

For applications requesting a complete class entry, the length of the COPY area provided by the caller needs to change whenever the CNST or CNSX lengths change. When that occurs, callers are not required to recompile their programs if they use field RCVTCDTL which contains the length needed to hold both a CNST and a CNSX entry.

If the value for COPYLEN is smaller than field RCVTCDTL, then the CNST and CNSX data returned is truncated to the length specified on the COPYLEN operand.

If the value for COPYLEN is larger than field RCVTCDTL, the CNST and CNSX class entries are returned. The rest of the COPY area is unaltered.

If the value of COPYLEN is 0, no data is returned and the COPY area is unaltered.

Notes:

1. The COPY and COPYLEN operands allow AMODE 24 callers to access the fields located above the 16 megabyte line contained in the CNSX.
2. The COPY and COPYLEN operands are ignored when the CLASS= operand is omitted.
3. The COPY and COPYLEN operands are not valid on releases prior to RACF 2.2 and require that RELEASE=2.2 be specified on the RACROUTE REQUEST=STAT macro.
4. You must specify both the COPY= and COPYLEN= operands. If only one of the operands is specified, the one that is specified is ignored.

Recommendation

Use the COPY and COPYLEN operands rather than the ENTRY operand. By using the COPY and COPYLEN operands, your application is not subject to change should the class descriptor table be made dynamic.

However, if the application is running on levels of RACF prior to RACF 2.2, use the COPY, COPYLEN, and ENTRY operands. On levels of RACF prior to RACF 2.2, the COPY and COPYLEN operands are ignored. Therefore, your application needs to be sensitive to the release of RACF it is running on.

When running RACF 2.2, OS/390 Security Server (RACF) V1R1, or later, the area returned by the COPY operand should be used; when running on RACF 2.1 or prior releases, the area pointed to by the ENTRY operand should be used.

You can implement this recommendation as follows; see “Example 3” on page 187.

- Prior to invoking RACROUTE REQUEST=STAT, clear the area specified by the COPY operand.
- On return from the RACROUTE REQUEST=STAT request and after checking the return codes, use field CNSTLGT to determine where the class information was returned.

  If CNSTLGT is not equal to 0 (running RACF 2.2, OS/390 Security Server (RACF) V1R1, or later,), then the application should use class information returned in the area specified by the COPY operand and mapped by ICHPCNST.

  If CNSTLGT is equal to 0 (running RACF 2.1 or prior release), the application should use the class information pointed to by the ENTRY operand.

,ENTRY=*entry addr*

specifies the address of a 4-byte area that is set to the address of the specified class in the RACF class-descriptor table. This operand is ignored when the CLASS= operand is omitted.

AMODE 24 callers should use the COPY and COPYLEN operands instead of the ENTRY operand.

,MF=S

specifies the standard form of the RACROUTE REQUEST=STAT macro instruction.

Return codes and reason codes

When you execute the macro, space for the RACF return code and reason code is reserved in the first two words of the RACROUTE parameter list. You can access them using the ICHSAFP mapping macro, by loading the ICHSAFP pointer with the label that you specified on the list form of the macro. When control is returned, register 15 contains the SAF return code.

Note to Reader

All return and reason codes are shown in hexadecimal. Also, please note that SAF return code is presented as SAF RC and RACF return code is presented as RACF RC in the following section.

SAF RC	Meaning
00	RACROUTE REQUEST=STAT has completed successfully.

RACF RC	Meaning
00	RACF is active and, if CLASS= was specified, the class is active.

04 The requested function could not be performed.

RACF RC	Meaning
00	No security decision could be made.

Reason Code	Meaning
00	The RACF router was not loaded; the request, resource, subsystem combination could not be found in the RACF ROUTER table; no successful exit processing can take place.

RACF RC	Meaning
04	RACF is active; the class is inactive.
08	RACF is active; the class is not defined to RACF.
0C	RACF is inactive; the class was active prior to RACF being deactivated.
10	RACF is inactive; the class is inactive.
14	RACF is inactive; the class is not defined to RACF.
1C	Incorrect parameter-list length is detected for the request-specific portion of the RACROUTE REQUEST=STAT parameter list. The parameter list length is decimal 20.
18	RACF is not installed, or an insufficient level of RACF is installed.

64 Indicates that the CHECK subparameter of the RELEASE keyword was specified on the execute form of the RACROUTE REQUEST=STAT macro; however, the list form of the macro does not have the same RELEASE parameter. Macro processing terminates.

Note: For RACF return codes X'00', X'04', X'0C', and X'10', the class-descriptor entry for the specified class is returned to the caller in the COPY area provided or in the area pointed to by the ENTRY address.

Example 1

Operation: Determine whether the DASDVOL class is active, and retrieve the address of its class descriptor. A fullword, CDADDR, contains the class-descriptor address.

```
RACROUTE REQUEST=STAT,CLASS='DASDVOL',ENTRY=CDADDR,      X
         WORKA=RACWK
     .
     .
     .
RACWK    DS   CL512
```

Example 2

Operation: Retrieve a copy of the CNST and CNSX area and reference fields in the CNSX.

```
USING CVTMAP,4              * Establish addressability to CVT
L     4,16(0)
USING RCVT,5                * Establish addressability to RCVT
L     5,CVTRAC
L     2,RCVTCDTL            * Load length to GETMAIN in reg 2.
GETMAIN RU,LV=(2)           * Get storage.
LR    3,1                   * Save address of new area in reg 3.
RACROUTE REQUEST=STAT,WORKA=SAFWORK,                          X
      CLASS='TCICSTRN',                                       X
      COPY=(3),                                               X
      COPYLEN=(2),                                            X
      RELEASE=2.2,MF=S
USING CNST,3                * Reg 3 was set up to point to COPY area
USING CNSX,4                * Establish addressability to CNSX
L     4,CNSTCNSX
IC    8,CNSTDFRC            * Load value of CNSTDFRC
     .
     .
     .
ICHPCNST                    * Generates CNST and CNSX DSECTs
```

Example 3

Operation: Use the COPY and ENTRY operands together in a program that runs on RACF Version 2 Release 2 and on releases prior to RACF Version 2 Release 2.

```
         LA    0,COPYAREA            * Get address of COPY area
         LA    1,AREALEN             * Get length of COPY area
         SLR   15,15                 * Clear length/padding register
         MVCL  0,14                  * Zero out COPY area
RACROUTE REQUEST=STAT,WORKA=SAFWORK, CLASS='JESSPOOL',   X
         ENTRY=EPTR,
         COPY=COPYAREA, COPYLEN=AREALEN,                 X
         RELEASE=2.2, MF=S
***
*** Check if class data was returned in COPYAREA.
*** -- If so, use COPYAREA data mapped by ICHPCNST macro.
*** -- Otherwise, use class entry returned in EPTR because
***    this system is running an earlier release of RACF that
***    does not support COPY function.
***
         LA    3,COPYAREA            * Get address of COPY area
         USING CNST,3
         CLC   CNSTLGT,ZEROH         * Was class data returned in
                                     * COPYAREA?
         BNE   USECOPY               * -- Yes,
                                     * Use class entry in COPYAREA
         USING OLDCNST,3             * -- No,
                                     * Use class entry pointer EPTR
```

```
         L     3,EPTR                * and pre-2.2 CNST mapping
     .
     .
     .
USECOPY  EQU   *                    * Use class entry in COPYAREA
         USING CNST,3
         USING CNSX,4               * Establish addressability to CNSX
         L     4,CNSTCNSX           * if program needs to access CNSX
                                    * fields
     .
     .
     .
COPYAREA DS CL400           * Large enough to hold a 2.2 class entry
AREALEN  EQU 400            * Size of area provided (COPYAREA)
EPTR     DS  A              * Address of class ENTRY returned
ZEROH    DC  H'0'
OLDCNST  DSECT              * Pre-2.2 CNST declared locally
```

RACROUTE REQUEST=STAT (list form)

The list form of the RACROUTE REQUEST=STAT macro instruction is written as follows. Refer to the Standard Form of the RACROUTE REQUEST=STAT macro to determine additional parameters that are required by the time the RACROUTE service is invoked using the execute form of the macro.

name	*name*: Symbol. Begin *name* in column 1.
b	One or more blanks must precede RACROUTE.
RACROUTE	
b	One or more blanks must follow RACROUTE.
REQUEST=STAT	
,CLASS=*'class name'*	*class name*: 1–8 character class name
,CLASS=*class name addr*	*class name addr*: A-type address
,COPY=*copy addr*	*copy addr*: A-type address or register (2) - (12)
,COPYLEN=*copy length*	*copy length*: length or register (2) - (12)
,ENTRY=*entry addr*	*entry addr*: A-type address
,MF=L	

The parameters are explained under the standard form of the RACROUTE REQUEST=STAT macro with the following exception:

,MF=L
specifies the list form of the RACROUTE REQUEST=STAT macro.

RACROUTE REQUEST=STAT (execute form)

The execute form of the RACROUTE REQUEST=STAT macro is written as follows. Refer to the Standard Form of the RACROUTE REQUEST=STAT macro to determine additional parameters that are required by the time the RACROUTE service is invoked using the Execute form of the macro.

name	*name*: Symbol. Begin *name* in column 1.
b	One or more blanks must precede RACROUTE.
RACROUTE	
b	One or more blanks must follow RACROUTE.
REQUEST=STAT	
,RELEASE=*number* ,RELEASE=(*number*,CHECK)	*number*: See Standard Form
,CLASS=*class name addr*	*class name addr*: Rx-type address or register (2) - (12)
,COPY=*copy addr* ,COPYLEN=*copy length*	*copy addr*: A-type address or register (2) - (12) *copy length*: length or register (2) - (12)
,ENTRY=*entry addr*	*entry addr*: Rx-type address or register (2) - (12)
,MF=(E,*ctrl addr*)	*ctrl addr*: Rx-type address or register (1) - (12)

The parameters are explained under the standard form of the RACROUTE REQUEST=STAT macro with the following exceptions:

,RELEASE=*number*
,RELEASE=(*number***,CHECK)**
specifies the RACF release level of the parameter list to be generated by this macro.

To use the parameters associated with a release, you must specify the number of that release or a later release number. If you specify a parameter with an incompatible release level, the parameter is not accepted by the macro processing. An error message is issued at assembly time.

When you specify the RELEASE keyword, checking is done at assembly time. Compatibility between the list and execute forms of the RACROUTE REQUEST=STAT macro are validated at execution time if you specify the CHECK subparameter on the execute form of the macro.

The size of the list form expansion must be large enough to accommodate all parameters defined by the RELEASE keyword on the execute form of the

macro. Otherwise, when CHECK processing is requested, the execute form of the macro is not done, and a return code of X'64' is returned.

,MF=(E,*ctrl addr*)
specifies the execute form of the RACROUTE REQUEST=STAT macro, using a remote, control-program parameter list.

RACROUTE REQUEST=STAT (modify form)

The modify form of the RACROUTE REQUEST=STAT macro is written as follows. Refer to the Standard Form of the RACROUTE REQUEST=STAT macro to determine additional parameters that are required by the time the RACROUTE service is invoked using the Execute form of the macro.

name	*name*: Symbol. Begin *name* in column 1.
b	One or more blanks must precede RACROUTE.
RACROUTE	
b	One or more blanks must follow RACROUTE.
REQUEST=STAT	
,CLASS=*class name addr*	*class name addr*: Rx-type address or register (2) - (12)
,COPY=*copy addr*	*copy addr*: A-type address or register (2) - (12)
,COPYLEN=*copy length*	*copy length*: length or register (2) - (12)
,ENTRY=*entry addr*	*entry addr*: Rx-type address or register (2) - (12)
,MF=(M,*ctrl addr*)	*ctrl addr*: Rx-type address or register (1) - (12)

The parameters are explained under the standard form of the RACROUTE REQUEST=STAT macro, with the following exceptions:

,MF=(M,*ctrl addr*)
specifies the modify form of the RACROUTE REQUEST=STAT macro, using a remote, control-program parameter list.

RACROUTE REQUEST=TOKENBLD: Build a UTOKEN

The RACROUTE REQUEST=TOKENBLD macro builds a UTOKEN. The TOKNIN keyword specifies the location of the existing token from which a modified token is to be built. Note that the modification does not change the input token; instead, the function builds a new, modified token from the parameters provided. The TOKNIN

keyword is optional; if you want to build a new UTOKEN, the TOKNIN keyword should not be used. The TOKNOUT keyword specifies the location where the new, modified token is to be built.

The following order of priority exists for building the UTOKEN:

- Keywords specified on the request take precedence over corresponding fields in the TOKNIN and STOKEN parameters.
- All fields within the token specified by the TOKNIN keyword take precedence over those specified by STOKEN.
- The fields for the submitter's ID, submitter's group, submit node, execution node, session, port of entry and its class, as obtained from the token specified by the STOKEN keyword, are last.

If you do not want certain fields overridden, do not specify keywords for those fields.

To use this service, you must specify RELEASE=1.9 or a later release number.

To issue the RACROUTE REQUEST=TOKENBLD macro, the calling module must be authorized (APF-authorized, in System Key 0-7, or in Supervisor State).

The caller cannot hold locks when issuing RACROUTE REQUEST=TOKENBLD.

This function is performed by SAF.

RACROUTE REQUEST=TOKENBLD (standard form)

The standard form of the RACROUTE REQUEST=TOKENBLD macro is written as follows. For a description of additional keywords that you can code and additional parameters that are required on the RACROUTE request, but that are not specific to this request type, see "RACROUTE (standard form)" on page 13.

name	*name*: Symbol. Begin *name* in column 1.
b	One or more blanks must precede RACROUTE.
RACROUTE	
b	One or more blanks must follow RACROUTE.
REQUEST=TOKENBLD	
,TOKNOUT=*output token addr*	*output token addr*: A-type address or register (2) - (12)
,EXENODE=*execution node addr*	*execution node addr*: A-type address or register (2) - (12)
,GROUP=*group addr*	*group addr*: A-type address or register (2) - (12)

,POE=*port of entry addr*	*port of entry addr*: A-type address or register (2) - (12)
,POENET=*network name addr*	*network name addr*: A-type address or register (2) - (12)
,REMOTE=YES	
,REMOTE=NO	**Default:** REMOTE=NO
,SECLABL=*seclabel addr*	*seclabel addr*: A-type address or register (2) - (12)
,SESSION=*type*	*type*: Any valid session type **Default:** SESSION=TSO
,SGROUP=*submitting group addr*	*submitting group addr*: A-type address or register (2) - (12)
,SNODE=*submitting node addr*	*submitting node addr*: A-type address or register (2) - (12)
,STOKEN=*stoken addr*	*stoken addr*: A-type address or register (2) - (12)
,SUSERID=*submitting userid addr*	*submitting userid addr*: A-type address or register (2) - (12)
,TERMID=*terminal addr*	*terminal addr*: A-type address or register (2) - (12)
,TOKNIN=*input token addr*	*input token addr*: A-type address or register (2) - (12)
,TRUSTED=YES	
,TRUSTED=NO	**Default:** TRUSTED=NO
,USERID=*userid addr*	*userid addr*: A-type address or register (2) - (12)
,MF=S	

The parameters are explained as follows:

,EXENODE=*execution node addr*
specifies the address of an area that contains a 1-byte length field followed by the name of the node on which the unit of work is to be executed. The node name cannot exceed eight bytes.

,GROUP=*group addr*
specifies the group of the user who has entered the system. The address points to a 1-byte length field followed by the group name. The group name cannot exceed eight bytes.

,POE=*port of entry addr*
specifies the address of the port of entry into the system. The address points to the name of the input device through which the user or job entered the system. For example, this can be the name of the input device through which the job was submitted or the terminal logged on. The port of entry is an 8-character field, left-justified and padded with blanks.

The port of entry (POE) becomes a part of the user's security token (UTOKEN). A flag in the UTOKEN uniquely identifies the RACF general-resource class to which the data in the POE field belongs: APPCPORT, TERMINAL, CONSOLE, or JESINPUT.

The RACF class JESINPUT provides the conditional access support for jobs entered into the system through a JES input device, and the CONSOLE class performs the same task for commands that originate from a console. In addition, the APPCPORT class provides conditional access support for users entering the system from a given LU (APPC port of entry).

The TERMINAL class covers the terminal used to log on to TSO.

When both the POE and TERMID keywords are specified, the POE keyword takes precedence.

,POENET=*network name address*
specifies the address of a structure that consists of a 1-byte length field followed by up to an 8-byte field containing the network name of the partner LU. When specified with the POE parameter, the value specified for POENET is combined with the value specified for POE to create a network qualified name in the form *netid.luname*. The network qualified LU name is then used as the POE value during further processing. POENET is only valid with SESSION=APPCTP, and should not be specified with any other type of session. To specify the POENET parameter, you must specify RELEASE=2.6.

REMOTE=YES
REMOTE=NO
specifies whether the job came through the network. The default is REMOTE=NO.

,SECLABL=*seclabel addr*
specifies the address of an 8-byte, left-justified field, which contains the security label, padded to the right with blanks.

To use this keyword, you must also specify RELEASE=1.9 or a later release number.

An installation can use security labels to establish an association between a specific RACF security level (SECLEVEL) and a set of (zero or more) RACF security categories (CATEGORY). If it is necessary to use security labels to prevent the unauthorized movement of data from one level to another when multiple levels of data are in use on the system at the same time, see *z/OS Security Server RACF Security Administrator's Guide*for further information.

,SESSION=*type*
specifies the session type to be associated with the request. Session types are literals. When the SESSION keyword is used in combination with the POE keyword, SESSION determines the class with which the POE keyword is connected.

The default session type is TSO.

The allowable session types and their associated POE classes are:

Session Type	Description	POE Class
APPCTP	An APPC transaction program	APPCPORT
COMMAND	A command	CONSOLE
CONSOPER	A console operator	CONSOLE
EXTBATCH	A job from external reader (EXT)	JESINPUT

Session Type	Description	POE Class
EXTXBM	An execution batch monitor job	JESINPUT
INTBATCH	A batch job from internal reader (INT)	JESINPUT
INTXBM	An execution batch monitor job from internal reader (INT)	JESINPUT
MOUNT	A mount	None
NJEBATCH	A job from network job entry (NJE)	JESINPUT
NJEOPER	A network job entry operator	JESINPUT
NJEXBM	An network execution batch monitor job	JESINPUT
NJSYSOUT	A network SYSOUT	JESINPUT
OMVSSRV	An OMVS server application When OMVSSRV is specified, user profile statistics are updated daily at most. Audit records are only created when one of the following conditions are met: • an incorrect password is specified • the user ID has been revoked • a new password was provided	None
RJEBATCH	A batch job from remote job entry (RJE)	JESINPUT
RJEOPER	A remote job-entry operator	JESINPUT
RJEXBM	A remote execution batch monitor job	JESINPUT
STARTED	A started procedure of started task	None
SYSAS	A system address space	None
TKNUNKWN	An unknown user from NJE	JESINPUT
TSO	A TSO or other interactive session logon	TERMINAL

Note: When no POE class is associated with the session type, the POE ID and session are preserved.

,SGROUP=*submitting group addr*
specifies the address of an area that contains a 1-byte length field followed by the group name of the user who submitted the unit of work. The group ID cannot exceed eight bytes.

,SNODE=*submitting node addr*
specifies the address of an area that contains a 1-byte length field followed by the name of the node from which the unit of work was submitted. The node name cannot exceed eight bytes.

,STOKEN=*stoken addr*
specifies the address of the submitter's UTOKEN. The first byte contains the length of the UTOKEN, and the second byte contains the version number. See the ICHRUTKN mapping, "RUTKN: Resource/Security Token" in *z/OS Security Server RACF Data Areas*, for the current version and release.

If you specify STOKEN, the user ID in STOKEN becomes the submitter's ID in TOKNOUT, unless you specify the submitter's ID (SUSER) keyword. In this case, that keyword becomes the submitter's ID in TOKNOUT. Likewise, if you specified GROUP in STOKEN, that becomes the submitter's group in TOKNOUT, unless you specified the submitter's group (SGROUP) keyword. The SESSION, port of entry (POE), and port-of-entry class (POEX) fields are also used from the STOKEN. The execution node becomes the resulting submit

node and execution node, unless you specify the submit node (SNODE) or execution node (EXENODE) keywords. In all cases, the specified keywords on the request override the fields of STOKEN, if one is specified.

,SUSERID=*submitting userid addr*
specifies the address of an area that contains a 1-byte length field followed by the user ID of the user who submitted the unit of work. The user ID cannot exceed eight bytes.

,TERMID=*terminal addr*
specifies the address of the identifier of the terminal through which the user is accessing the system. The address points to an 8-byte area containing the terminal identifier. The area must reside in a non-task-related storage subpool.

,TOKNIN=*input token addr*
specifies the address of the UTOKEN or RTOKEN that is to be used as a base for the output token.

,TOKNOUT=*output token addr*
specifies the address of the caller-provided area for the modified token data. The first byte of storage at the address specified must contain the token length. The second byte must contain the format version of the token. This provides for downward compatibility with all versions of the token map.

For a description of the fields that are used from STOKEN by TOKNOUT, see the STOKEN description.

,TRUSTED=YES
,TRUSTED=NO
specifies whether or not the unit of work is a member of the trusted computer base. Subsequent RACROUTE REQUEST=AUTH requests using a token with this attribute have the following effects:

- Authorization checking is bypassed (this includes bypassing the checks for security classification on users and data).
- No statistics are updated.
- No audit records are generated, except those requested using the SETROPTS LOGOPTIONS command.

This is similar to having the started-procedures-table trusted bit on.

,USERID=*userid addr*
specifies the identification of the operator who has entered the system. The address points to a 1-byte length field followed by the user ID. The user ID cannot exceed eight bytes.

,MF=S
specifies the standard form of the RACROUTE REQUEST=TOKENBLD macro instruction.

Return codes and reason codes

When you execute the macro, space for the RACF return code and reason code is reserved in the first two words of the RACROUTE parameter list. You can access them using the ICHSAFP mapping macro, by loading the ICHSAFP pointer with the label that you specified on the list form of the macro. When control is returned, register 15 contains the SAF return code.

Note to Reader

All return and reason codes are shown in hexadecimal. Also, please note that SAF return code is presented as SAF RC and RACF return code is presented as RACF RC in the following section.

SAF RC	Meaning
00	RACROUTE REQUEST=TOKENBLD has completed successfully.

RACF RC	Meaning
08	Indicates REQUEST=TOKENBLD has completed successfully.

Reason Code	Meaning
10	TOKNOUT area specified was larger than expected; on return the token-length field contains the expected length.
14	STOKEN area specified was larger than expected.
20	TOKNIN area specified was larger than expected.

SAF RC	Meaning
08	The requested function failed.

RACF RC	Meaning
00	An error occurred before the function could initiate.

Reason Code	Meaning
00	A recovery environment could not be established.

Example 1

Operation: The following example shows how a RACROUTE REQUEST=TOKENBLD macro can be specified to replace a SECLABEL in an existing token.

```
   RACROUTE REQUEST=TOKENBLD,TOKNOUT=TOKOUT,TOKNIN=TOKIN        X
            SECLABL=SLBL,RELEASE=1.9,WORKA=RACWK
  .
  .
TOKOUT    DS  0CL80
          DC  XL2'5001' /* FIRST 2 BYTES SPECIFY TOKEN VERSION */
          DC  XL78'0'

TOKIN     DS  0CL80
          DC  XL2'5001'
          DC  XL78'0'

SLBL      DC  CL8'INTERNAL'
RACWK     DC  CL512
```

Note: Additional keywords required by RACF to complete the request, such as WORKA, are specified on RACROUTE itself.

RACROUTE REQUEST=TOKENBLD (list form)

The list form of the RACROUTE REQUEST=TOKENBLD macro is written as follows. Refer to the Standard Form of the RACROUTE REQUEST=TOKENBLD macro to determine additional parameters that are required by the time the RACROUTE service is invoked using the Execute form of the macro.

name	*name*: Symbol. Begin *name* in column 1.
b	One or more blanks must precede RACROUTE.
RACROUTE	
b	One or more blanks must follow RACROUTE.
REQUEST=TOKENBLD	**Default:**RELEASE=1.6
,EXENODE=*execution node addr*	*execution node addr*: A-type address
,GROUP=*group addr*	*group addr*: A-type address
,POE=*port of entry addr*	*port of entry addr*: A-type address
,POENET=*network name addr*	*network name addr*: A-type address or register (2) - (12)
,REMOTE=YES	
,REMOTE=NO	**Default:** REMOTE=NO
,SECLABL=*seclabel addr*	*seclabel addr*: A-type address
,SESSION=*type*	*type*: Any valid session type **Default:** SESSION=TSO
,SGROUP=*submitting group addr*	*submitting group addr*: A-type address
,SNODE=*submitting node addr*	*submitting node addr*: A-type address
,STOKEN=*stoken addr*	*stoken addr*: A-type address
,SUSERID=*submitting userid addr*	*submitting userid addr*: A-type address
,TERMID=*terminal addr*	*terminal addr*: A-type address
,TOKNIN=*input token addr*	*input token addr*: A-type address

,TOKNOUT=*output token addr*	*output token addr*: A-type address
,TRUSTED=YES ,TRUSTED=NO	**Default:** TRUSTED=NO
,USERID=*userid addr*	*userid addr*: A-type address

,MF=L

The parameters are explained under the standard form of the RACROUTE REQUEST=TOKENBLD macro instruction with the following exception:

,MF=L
specifies the list form of the RACROUTE REQUEST=TOKENBLD macro instruction.

RACROUTE REQUEST=TOKENBLD (execute form)

The execute form of the RACROUTE REQUEST=TOKENBLD macro is written as follows. Refer to the Standard Form of the RACROUTE REQUEST=TOKENBLD macro to determine additional parameters that are required by the time the RACROUTE service is invoked using the Execute form of the macro.

name	*name*: Symbol. Begin *name* in column 1.
b	One or more blanks must precede RACROUTE.
RACROUTE	
b	One or more blanks must follow RACROUTE.

REQUEST=TOKENBLD

,RELEASE=*number* ,RELEASE=(,CHECK) ,RELEASE=(*number*,CHECK)	*number*: See Standard Form **Default:** RELEASE=1.6
,EXENODE=*execution node addr*	*execution node addr*: Rx-type address or register (2) - (12)
,GROUP=*group addr*	*group addr*: Rx-type address or register (2) - (12)
,POE=*port of entry addr*	*port of entry addr*: Rx-type address or register (2) - (12)

,POENET=*network name addr*	*network name addr*: A-type address or register (2) - (12)
,REMOTE=YES ,REMOTE=NO	
,SECLABL=*seclabel addr*	*seclabel addr*: Rx-type address or register (2) - (12)
,SESSION=*type*	*type*: Any valid session type
,SGROUP=*submitting* ,*group addr*	*submitting group addr*: Rx-type address or register (2) - (12)
,SNODE=*submitting node addr*	*submitting node addr*: Rx-type address or register (2) - (12)
,STOKEN=*stoken addr*	*stoken addr*: Rx-type address or register (2) - (12)
,SUSERID=*submitting userid addr*	*submitting userid addr*: Rx-type address or register (2) - (12)
,TERMID=*terminal addr*	*terminal addr*: Rx-type address or register (2) - (12)
,TOKNIN=*input token addr*	*input token addr*: Rx-type address or register (2) - (12)
,TOKNOUT=*output token addr*	*output token addr*: Rx-type address or register (2) - (12)
,TRUSTED=YES ,TRUSTED=NO	
,USERID=*userid addr*	*userid addr*: Rx-type address or register (2) - (12)
,MF=(E,*ctrl addr*)	*ctrl addr*: Rx-type address or register (1) or (2) - (12)

The parameters are explained under the standard form of the RACROUTE REQUEST=TOKENBLD macro instruction with the following exceptions:

,RELEASE=*number*
,RELEASE=(,CHECK)
,RELEASE=(*number***,CHECK)**

specifies the RACF release level of the parameter list to be generated by this macro.

To use the parameters associated with a release, you must specify the number of that release or a later release number. If you specify an earlier release level, the parameter is not accepted by macro processing, and an error message is issued at assembly time.

Compatibility between the list and execute forms of the RACROUTE REQUEST=TOKENBLD macro is validated at execution time if you specify the CHECK subparameter on the execute form of the macro.

The size of the list form expansion must be large enough to accommodate all parameters defined by the RELEASE keyword on the execute form of the macro. Otherwise, when CHECK processing is requested, the execute form of the macro is not done, and a return code of X'64' is returned.

The default is RELEASE=1.6.

,MF=(E,*ctrl addr*)
specifies the execute form of the RACROUTE REQUEST=TOKENBLD macro, using a remote, control-program parameter list.

RACROUTE REQUEST=TOKENBLD (modify form)

The modify form of the RACROUTE REQUEST=TOKENBLD macro is written as follows. Refer to the Standard Form of the RACROUTE REQUEST=TOKENBLD macro to determine additional parameters that are required by the time the RACROUTE service is invoked using the Execute form of the macro.

name	*name*: Symbol. Begin *name* in column 1.
b	One or more blanks must precede RACROUTE.
RACROUTE	
b	One or more blanks must follow RACROUTE.
REQUEST=TOKENBLD	
,EXENODE=*execution node addr*	*execution node addr*: Rx-type address or register (2) - (12)
,GROUP=*group addr*	*group addr*: Rx-type address or register (2) - (12)
,POE=*port of entry addr*	*port of entry addr*: Rx-type address or register (2) - (12)
,POENET=*network name addr*	*network name addr*: A-type address or register (2) - (12)
,REMOTE=YES ,REMOTE=NO	
,SECLABL=*seclabel addr*	*seclabel addr*: Rx-type address or register (2) - (12)
,SESSION=*type*	*type*: Any valid session type
,SGROUP=*submitting group addr*	*submitting group addr*: Rx-type address or register (2) - (12)
,SNODE=*submitting node addr*	*submitting node addr*: Rx-type address or register (2) - (12)

,STOKEN=*stoken addr*	*stoken addr*: Rx-type address or register (2) - (12)
,SUSERID=*submitting userid addr*	*submitting userid addr*: Rx-type address or register (2) - (12)
,TERMID=*terminal addr*	*terminal addr*: Rx-type address or register (2) - (12)
,TOKNIN=*input token addr*	*input token addr*: Rx-type address or register (2) - (12)
,TOKNOUT=*output token addr*	*output token addr*: Rx-type address or register (2) - (12)
,TRUSTED=YES ,TRUSTED=NO	
,USERID=*userid addr*	*userid addr*: Rx-type address or register (2) - (12)
,MF=(M,*ctrl addr*)	*ctrl addr*: Rx-type address or register (1) or (2) - (12)

The parameters are explained under the standard form of the RACROUTE REQUEST=TOKENBLD macro instruction with the following exceptions:

,MF=(M,*ctrl addr*)
specifies the modify form of the RACROUTE REQUEST=TOKENBLD macro, using a remote, control-program parameter list.

RACROUTE REQUEST=TOKENMAP: Access token fields

The RACROUTE REQUEST=TOKENMAP macro maps a token in either internal or external format. Internal format is the encoded data format returned from a RACROUTE REQUEST=VERIFYX or a RACROUTE REQUEST=TOKENXTR. External format is the user-readable format that is mapped by the ICHRUTKN macro. See “RUTKN: Resource/User Security Token” in *z/OS Security Server RACF Data Areas*. RACROUTE REQUEST=TOKENMAP is the **only** interface used to map token data.

The primary purpose of the RACROUTE REQUEST=TOKENMAP function is to allow a caller to access individual fields within the UTOKEN. The caller needs to provide the proper length and version for the corresponding format version of a token.

To use this service, you must specify RELEASE=1.9 or a later release number.

This function is performed by SAF.

The caller cannot hold locks when issuing RACROUTE REQUEST=TOKENMAP.

RACROUTE REQUEST=TOKENMAP (standard form)

The standard form of the RACROUTE REQUEST=TOKENMAP macro is written as follows. For a description of additional keywords that you can code and additional parameters that are required on the RACROUTE request, but that are not specific to this request type, see “RACROUTE (standard form)” on page 13.

name	*name*: Symbol. Begin *name* in column 1.
b	One or more blanks must precede RACROUTE.
RACROUTE	
b	One or more blanks must follow RACROUTE.
REQUEST=TOKENMAP	
,TOKNIN=*input token addr*	*input token addr*: A-type address or register (2) - (12)
,TOKNOUT=*output token addr*	*output token addr*: A-type address or register (2) - (12)
,FORMOUT=INTERNAL ,FORMOUT=EXTERNAL	**Default:** FORMOUT=EXTERNAL
,XMREQ=YES. ,XMREQ=NO	**Default:** NO
,MF=S	

The parameters are explained as follows:

,FORMOUT=EXTERNAL
,FORMOUT=INTERNAL
specifies the format of the output token area.

INTERNAL
This is the encoded data format that is returned from a RACROUTE REQUEST=VERIFYX, RACROUTE REQUEST=TOKENXTR or a RACROUTE REQUEST=TOKENBLD.

EXTERNAL
The user-readable format is that which is mapped by the ICHRUTKN macro. See “RUTKN: Resource/User Security Token” in *z/OS Security Server RACF Data Areas*.

,TOKNIN=*input token addr*
specifies the address of the UTOKEN or RTOKEN that is to be converted to internal or external format.

,TOKNOUT=*output token address*
specifies the address of the caller-provided area for the converted token data.

The first byte of storage at the address specified must contain the token length. The second byte must contain the format version of the token. This provides for downward compatibility with all versions of the token map.

,XMREQ=NO
,XMREQ=YES
indicates whether or not the caller is in cross-memory mode.

NO Indicates that the caller is not in cross-memory mode. (NO is the default.)

YES Signifies that the caller can (but need not) be running in cross-memory mode.

The parameter XMREQ=YES is supported only in an MVS/ESA environment. The caller must be in primary ASC mode when RACROUTE is issued.

,MF=S
specifies the standard form of the RACROUTE REQUEST=TOKENMAP macro instruction.

Return codes and reason codes

When you execute the macro, space for the RACF return code and reason code is reserved in the first two words of the RACROUTE parameter list. You can access them using the ICHSAFP mapping macro, by loading the ICHSAFP pointer with the label that you specified on the list form of the macro. When control is returned, register 15 contains the SAF return code.

Note to Reader
All return and reason codes are shown in hexadecimal. Also, please note that SAF return code is presented as SAF RC and RACF return code is presented as RACF RC in the following section.

SAF RC	Meaning
00	RACROUTE REQUEST=TOKENMAP has completed successfully.

RACF RC	Meaning
00	Reason described by the following hexadecimal reason codes:

Reason Code	Meaning
00	The request was successful.
04	TOKEN was not converted; already in requested format.
0C	TOKNOUT area too large; token was successfully extracted.

SAF RC	Meaning
04	RACROUTE REQUEST=TOKENMAP did not complete successfully.

RACF RC	Meaning
00	Reason described by the following hexadecimal reason codes:

Reason Code	Meaning

00	XMREQ=YES was specified in a non-MVS/ESA environment.

Example 1

Operation: The following is an example of invoking the TOKENMAP function:

```
RACROUTE REQUEST=TOKENMAP,                                          X
         TOKNIN=TOKIN,TOKNOUT=TOKOUT,                               X
         RELEASE=1.9,WORKA=RACWK

TOKIN     DS  0CL80
          DC  XL2'5001'  /*FIRST 2 BYTES SPECIFY TOKEN VERSION */
          DC  XL78'0'

TOKOUT    DS  0CL80
          DC  XL2'5001'
          DC  XL78'0'

RACWK     DS  CL'512'
```

RACROUTE REQUEST=TOKENMAP (list form)

The list form of the RACROUTE REQUEST=TOKENMAP macro is written as follows. Refer to the Standard Form of the RACROUTE REQUEST=TOKENMAP macro to determine additional parameters that are required by the time the RACROUTE service is invoked using the Execute form of the macro.

name	*name*: Symbol. Begin *name* in column 1.
b	One or more blanks must precede RACROUTE.
RACROUTE	
b	One or more blanks must follow RACROUTE.
REQUEST=TOKENMAP	
,FORMOUT=INTERNAL ,FORMOUT=EXTERNAL	
,TOKNIN=*input token addr*	*input token addr*: A-type address
,TOKNOUT=*output token addr*	*output token addr*: A-type address
,XMREQ=YES ,XMREQ=NO	**Default:** NO
,MF=L	

The parameters are explained under the standard form of the RACROUTE REQUEST=TOKENMAP macro with the following exception:

,MF=L
specifies the list form of the RACROUTE REQUEST=TOKENMAP macro instruction.

RACROUTE REQUEST=TOKENMAP (execute form)

The execute form of the RACROUTE REQUEST=TOKENMAP macro is written as follows. Refer to the Standard Form of the RACROUTE REQUEST=TOKENMAP macro to determine additional parameters that are required by the time the RACROUTE service is invoked using the Execute form of the macro.

name	*name*: Symbol. Begin *name* in column 1.
ƀ	One or more blanks must precede RACROUTE.
RACROUTE	
ƀ	One or more blanks must follow RACROUTE.
REQUEST=TOKENMAP	
,FORMOUT=INTERNAL ,FORMOUT=EXTERNAL	
,TOKNIN=*input token addr*	*input token addr*: Rx-type address or register (2) - (12)
,TOKNOUT=*output token addr*	*output token addr*: Rx-type address or register (2) - (12)
,XMREQ=YES ,XMREQ=NO	
,MF=(E,*ctrl addr*)	*ctrl addr*: Rx-type address or register (1) or (2) - (12)

The parameters are explained under the standard form of the RACROUTE REQUEST=TOKENMAP macro with the following exception:

,MF=(E,*ctrl addr*)
specifies the execute form of the RACROUTE REQUEST=TOKENMAP macro instruction.

RACROUTE REQUEST=TOKENMAP (modify form)

The modify form of the RACROUTE REQUEST=TOKENMAP macro is written as follows. Refer to the Standard Form of the RACROUTE REQUEST=TOKENMAP macro to determine additional parameters that are required by the time the RACROUTE service is invoked using the Execute form of the macro.

name	*name*: Symbol. Begin *name* in column 1.
b	One or more blanks must precede RACROUTE.
RACROUTE	
b	One or more blanks must follow RACROUTE.
REQUEST=TOKENMAP	
,FORMOUT=INTERNAL ,FORMOUT=EXTERNAL	
,TOKNIN=*input token addr*	*input token addr*: Rx-type address or register (2) - (12)
,TOKNOUT=*output token addr*	*output token addr*: Rx-type address or register (2) - (12)
,XMREQ=YES. ,XMREQ=NO	
,MF=(M,*ctrl addr*)	*ctrl addr*: Rx-type address or register (1) or (2) - (12)

The parameters are explained under the standard form of the RACROUTE macro with the following exception:

,MF=(M,*ctrl addr*)
specifies the modify form of the RACROUTE macro instruction.

RACROUTE REQUEST=TOKENXTR: Extract UTOKENS

The RACROUTE REQUEST=TOKENXTR macro extracts a UTOKEN from the current address space, task or a caller-specified ACEE. Any information not available from the ACEE is returned as blanks, or is defaulted. The ICHRUTKN macro maps the UTOKEN. See “RUTKN: Resource/User Security Token” in *z/OS Security Server RACF Data Areas*.

To use this service, you must specify RELEASE=1.9 or a later release number.

This function is performed by SAF.

The caller cannot hold any locks when issuing RACROUTE REQUEST=TOKENXTR.

RACROUTE REQUEST=TOKENXTR (standard form)

The standard form of the RACROUTE REQUEST=TOKENXTR macro is written as follows. For a description of additional keywords that you can code and additional parameters that are required on the RACROUTE request, but that are not specific to this request type, see “RACROUTE (standard form)” on page 13.

name	*name*: Symbol. Begin *name* in column 1.
b	One or more blanks must precede RACROUTE.
RACROUTE	
b	One or more blanks must follow RACROUTE.
REQUEST=TOKENXTR	
,TOKNOUT=*output token addr*	*output token addr*: A-type address or register (2) - (12)
,ACEE=*acee addr*	*acee addr*: A-type address or register (2) - (12)
,XMREQ=YES ,XMREQ=NO	**Default:** XMREQ=NO
,MF=S	

The parameters are explained as follows:

,ACEE=*acee addr*
specifies the address of the ACEE from which information is to be extracted. If you do not specify the ACEE keyword, TOKENXTR extracts the information it needs from the TCBSENV field of the task control block if it is nonzero; if it is zero, TOKENXTR extracts information it needs from the ASXBSENV field.

Note: If no ACEE is specified or found, a token is returned with the following information:
- The user ID is ‘*’.
- A default TOKEN flag is on.
- An undefined user flag is on.
- A flag indicating this token is created for a pre-RACF 1.9 system.

If there is a down-level ACEE, a token is returned with indication of a pre-RACF 1.9 system; certain fields might be blank or zero, such as SECLABEL, submitting user ID, and other information not available for a down-level ACEE.

,TOKNOUT=*return token addr*
specifies the address where the requester wants TOKENXTR to return the

UTOKEN that was extracted from the ACEE. The first byte of storage at the address specified must contain the number of bytes of available storage. The second byte must contain the format version of the token.

,XMREQ=NO
,XMREQ=YES
indicates whether or not the caller is in cross-memory mode.

NO Indicates that the caller is not in cross-memory mode. (NO is the default.)

YES Signifies that the caller might (but need not) be running in cross-memory mode.

The parameter XMREQ=YES is supported only in an MVS/ESA environment. The caller must be in primary ASC mode when RACROUTE is issued.

,MF=S
specifies the standard form of the RACROUTE REQUEST=TOKENXTR macro instruction.

Return codes and reason codes

When you execute the macro, space for the RACF return code and reason code is reserved in the first two words of the RACROUTE parameter list. You can access them using the ICHSAFP mapping macro by loading the ICHSAFP pointer with the label that you specified on the list form of the macro. When control is returned, register 15 contains the SAF return code.

Note to Reader
All return and reason codes are shown in hexadecimal. Also, please note that SAF return code is presented as SAF RC and RACF return code is presented as RACF RC in the following section.

SAF RC	Meaning
00	RACROUTE REQUEST=TOKENXTR has completed successfully.

RACF RC	Meaning
00	Reason described by the following hex reason codes:

Reason Code	Meaning
00	The request was successful.
04	ACEE supplied is not valid (down level). Information is defaulted if it could not be extracted.
08	No ACEE available. Information is defaulted if it could not be extracted.
0C	TOKNOUT area length was too large.

SAF RC	Meaning
04	RACROUTE REQUEST=TOKENXTR did not complete successfully.

RACF RC	Meaning

00 Reason described by the following hex reason codes:

Reason Code	Meaning
00	XMREQ=YES was specified in a non-MVS/ESA environment.

Example 1

Operation: This example shows how to extract information from the ACEE to determine which type of label to put on printed output data. Please refer to the example section for TOKENMAP for an example of converting the token returned by TOKENXTR into readable form.

```
RACROUTE  REQUEST=TOKENXTR,TOKNOUT=TOKOUT,                          X
          WORKA=RACWK,                                              X
          RELEASE=1.9
  .
  .
RACWK     DS  CL512
TOKOUT    DS  0CL80
          DC  XL2'5001' /*FIRST 2 BYTES SPECIFY THE TOKEN VERSION */
          DC  XL78'0'
```

RACROUTE REQUEST=TOKENXTR (list form)

The list form of the RACROUTE REQUEST=TOKENXTR macro is written as follows. Refer to the Standard Form of the RACROUTE REQUEST=TOKENXTR macro to determine additional parameters that are required by the time the RACROUTE service is invoked using the Execute form of the macro.

name — *name*: Symbol. Begin *name* in column 1.

ƀ — One or more blanks must precede RACROUTE.

RACROUTE

ƀ — One or more blanks must follow RACROUTE.

REQUEST=TOKENXTR

,ACEE=*acee addr* — *acee addr*: A-type address

,TOKNOUT=*output token addr* — *output token addr*: A-type address

,XMREQ=YES
,XMREQ=NO — **Default:** XMREQ=NO

,MF=L

REQUEST=TOKENXTR

The parameters are explained under the standard form of the RACROUTE REQUEST=TOKENXTR macro with the following exception:

,MF=L
specifies the list form of the RACROUTE REQUEST=TOKENXTR macro instruction.

RACROUTE REQUEST=TOKENXTR (execute form)

The execute form of the RACROUTE REQUEST=TOKENXTR macro is written as follows. Refer to the Standard Form of the RACROUTE REQUEST=TOKENXTR macro to determine additional parameters that are required by the time the RACROUTE service is invoked using the Execute form of the macro.

name	*name*: Symbol. Begin *name* in column 1.
b	One or more blanks must precede RACROUTE.
RACROUTE	
b	One or more blanks must follow RACROUTE.
REQUEST=TOKENXTR	
,ACEE=*acee addr*	*acee addr*: Rx-type address or register (2) - (12)
,TOKNOUT=*output token addr*	*output token addr*: Rx-type address or register (2) - (12)
,XMREQ=NO ,XMREQ=YES	
,MF=(E, *ctrl addr*)	*ctrl addr*: Rx-type address or register (1) - (12)

The parameters are explained under the standard form of the RACROUTE REQUEST=TOKENXTR macro with the following exception:

,MF=(E,*ctrl addr*)
specifies the execute form of the RACROUTE REQUEST=TOKENXTR macro instruction.

RACROUTE REQUEST=TOKENXTR (modify form)

The modify form of the RACROUTE REQUEST=TOKENXTR macro is written as follows. Refer to the Standard Form of the RACROUTE REQUEST=TOKENXTR macro to determine additional parameters that are required by the time the RACROUTE service is invoked using the Execute form of the macro.

name	*name*: Symbol. Begin *name* in column 1.

b	One or more blanks must precede RACROUTE.
RACROUTE	
b	One or more blanks must follow RACROUTE.
REQUEST=TOKENXTR	
,ACEE=*acee addr*	*acee addr*: Rx-type address or register (2) - (12)
,TOKNOUT=*output token addr*	*output token addr*: Rx-type address or register (2) - (12)
,XMREQ=YES ,XMREQ=NO	
,MF=M	

The parameters are explained under the standard form of the RACROUTE REQUEST=TOKENXTR macro with the following exception:

,MF=M
species the modify form of the RACROUTE REQUEST=TOKENXTR macro instruction.

RACROUTE REQUEST=VERIFY: Identify and verify a RACF-defined user

The RACROUTE REQUEST=VERIFY macro provides RACF user identification and verification. The macro instruction identifies a user and verifies that the user is defined to RACF and has supplied a valid password or operator-identification card (OIDCARD parameter), or both. You can protect applications by using profiles in the APPL class along with this macro to control the users able to use applications. For more information on protecting applications, see *z/OS Security Server RACF Security Administrator's Guide*.

A subsystem can use REQUEST=VERIFY and the new keywords to create an ACEE. (For information on VLF considerations for ACEEs, see *z/OS Security Server RACF System Programmer's Guide*.) If RACF is not active or not installed, SAF, using the new keywords, builds a default ACEE to satisfy the request. The purpose of this use of REQUEST=VERIFY is for job submission and user verification checking.

The following order of priority exists for replacing the fields in the existing TOKEN:

- Keywords specified on the request take precedence over corresponding fields in the TOKNIN and STOKEN parameters.
- All fields within the token specified by the TOKNIN keyword take precedence over those specified by STOKEN.

- The fields for the submitter's ID, submitter's group, submit node, execution node, session, port of entry and its class, as obtained from the token specified by the STOKEN keyword are last.

If you do not want certain fields overridden, do not specify keywords for those fields.

To issue the RACROUTE REQUEST=VERIFY macro, the calling module must be authorized (APF-authorized, in System Key 0–7, or in Supervisor State) or the NEWPASS keyword must be omitted and the calling module must be in the RACF-authorized caller table **and** fetched from an authorized library **and** reentrant.

However, the caller does not need to be authorized or in the RACF-authorized caller table when specifying ENVIR=VERIFY on the RACROUTE REQUEST=VERIFY macro.

Recommendation: If you run programs that issue the RACROUTE REQUEST=VERIFY macro, run those programs APF-authorized. See *z/OS Security Server RACF System Programmer's Guide* for information on the authorized caller table.

The caller cannot hold any locks when issuing RACROUTE REQUEST=VERIFY.

Automatic direction of application updates does not propagate RACROUTE REQUEST=VERIFY requests that update the RACF database; however, the following ICHEINTY requests issued by RACROUTE REQUEST=VERIFY are propagated:

- The ICHEINTY setting the revoke flag in the user profile when a user is being revoked due to inactivity or incorrect password attempts.
- The ICHEINTY increasing the revoke count when a user enters an incorrect password.
- The ICHEINTY that resets the revoke count to 0 when a user enters a valid password.

The ICHEINTY issued by RACROUTE REQUEST=VERIFY to change the password in the user's profile is not eligible for propagation by automatic direction of application updates because it is already eligible for propagation by automatic password direction.

Notes:

1. Unless the caller specifies the ACEE= parameter on a RACROUTE REQUEST=VERIFY,ENVIR=CREATE macro instruction, the ACEE is always placed below 16MB.
2. If the caller specifies the ACEE= parameter, is executing in 31-bit addressing mode, and does not specify LOC=BELOW on the RACROUTE macro instruction, the ACEE is placed, if possible, above 16MB.

RACROUTE REQUEST=VERIFY (standard form)

The standard form of the RACROUTE REQUEST=VERIFY macro is written as follows. For a description of additional keywords that you can code and additional parameters that are required on the RACROUTE request, but that are not specific to this request type, see "RACROUTE (standard form)" on page 13.

Note

Application programs must be structured so that a task requesting RACF services does not do so while other I/O initiated by the task is outstanding. If such I/O is required, the task should either wait for the other I/O to complete before requesting RACF services, or the other I/O should be initiated under a separate task. This is necessary to assure proper processing in recovery situations.

name	*name*: Symbol. Begin *name* in column 1.
b	One or more blanks must precede RACROUTE.
RACROUTE	
b	One or more blanks must follow RACROUTE.
REQUEST=VERIFY	
,ACEE=*address of fullword*	*address of fullword*: A-type address or register (2) - (12)
,ACTINFO=*account addr*	*account addr*: A-type address or register (2) - (12)
,APPL=*'applname'* ,APPL=*applname addr*	*applname*: 1-8 character name *applname addr*: A-type address or register (2) - (12)
,ENCRYPT=YES ,ENCRYPT=NO	**Default:** ENCRYPT=YES
,ENVIR=CREATE ,ENVIR=VERIFY ,ENVIR=CHANGE ,ENVIR=DELETE	**Default:** ENVIR=CREATE
,ENVRIN=*envr data addr*	*envr data addr*: A-type address or register (2) - (12)
,ENVROUT=*envr data addr*	*envr data addr*: A-type address or register (2) - (12)
,ERROROPT=ABEND ,ERROROPT=NOABEND	**Default:** ERROROPT=ABEND
,EXENODE=*execution node addr*	*execution node addr*: A-type address or register (2) - (12)
,GROUP=*group addr*	*group addr*: A-type address or register (2) - (12)

,INSTLN=*parm list addr*	*parm list addr*: A-type address or register (2) - (12)
,JOBNAME=*jobname addr*	*jobname addr*: A-type address or register (2) - (12)
,LOC=BELOW ,LOC=ANY	**Default:** See parameter description.
,LOG=ASIS ,LOG=ALL ,LOG=NONE	**Default:** LOG=ASIS
,LOGSTR=*logstr addr*	*logstr addr*: A-type address or register (2) - (12)
,NEWPASS=*new password addr*	*new password addr*: A-type address or register (2) - (12)
,OIDCARD=*oid addr*	*oid addr*: A-type address or register (2) - (12)
,PASSCHK=YES ,PASSCHK=NO	**Default:** PASSCHK=YES
,PASSWRD=*password addr*	*password addr*: A-type address or register (2) - (12)
,PGMNAME=*programmer name addr*	*programmer name addr*: A-type address or register (2) - (12)
,POE=*port of entry addr*	*port of entry addr*: A-type address or register (2) - (12)
,POENET=*network name addr*	*network name addr*: A-type address or register (2) - (12)
,REMOTE=YES ,REMOTE=NO	**Default:** REMOTE=NO
,SECLABL=*seclabel addr*	*seclabel addr*: A-type address or register (2) - (12)
,SESSION=*type*	*type*: Any valid session type **Default:** SESSION=TSO
,SGROUP=*submitting group addr*	*submitting group addr*: A-type address or register (2) - (12)
,SMC=YES ,SMC=NO	**Default:** SMC=YES
,SNODE=*submitting node addr*	*submitting node addr*: A-type address or register (2) - (12)
,START=*procname addr*	*procname addr*: A-type address or register (2) - (12)
,STAT=ASIS ,STAT=NO	**Default:** STAT=ASIS

,STOKEN=*stoken addr*	*stoken addr*: A-type address or register (2) - (12)
,SUBPOOL=*subpool number*	*subpool number*: Decimal digit 0–255 **Default:** See explanations for the SUBPOOL keyword on page 227.
,SUSERID=*submitting userid addr*	*submitting userid addr*: A-type address or register (2) - (12)
,SYSTEM=NO ,SYSTEM=YES	**Default:** SYSTEM=NO **Note:** Use of the SYSTEM= keyword requires that RELEASE=1.9.2 or later be specified.
,TERMID=*terminal addr*	*terminal addr*: A-type address or register (2) - (12)
,TOKNIN=*utoken addr*	*utoken addr*: A-type address or register (2) - (12)
,TOKNOUT=*utoken addr*	*utoken addr*: A-type address or register (2) - (12)
,TRUSTED=YES ,TRUSTED=NO	**Default:** TRUSTED=NO
,USERID=*userid addr*	*userid addr*: A-type address or register (2) - (12)
,X500NAME=*X500 name pair addr*	*name pair addr*: A-type address or register (2) - (12)
,MF=S	

The parameters are explained as follows:

,ACEE=*address of fullword*
specifies the address of a fullword to be used as described below.

For ENVIR=DELETE

specifies the address of a fullword that contains the address of the ACEE to be deleted. If ACEE= is not specified or ACEE=0 is specified, and the TCBSENV field for the task using the RACROUTE REQUEST=VERIFY is nonzero, the ACEE pointed to by the TCBSENV is deleted, and TCBSENV is set to zero. If the TCBSENV and ASXBSENV fields both point to the same ACEE, ASXBSENV is also set to zero. If no ACEE address is passed, and TCBSENV is zero, the ACEE pointed to by ASXBSENV is deleted, and ASXBSENV is set to zero.

For ENVIR=CHANGE

specifies the address of a fullword that contains the address of the ACEE to be changed. if ACEE= is not specified, and the TCBSENV field for the task using the RACROUTE REQUEST=VERIFY is nonzero, the ACEE pointed to by the TCBSENV is changed. If TCBSENV is 0, the ACEE pointed to by ASXBSENV is changed.

For ENVIR=CREATE

specifies the address of a fullword in which the RACROUTE REQUEST=VERIFY function places the address of the ACEE created.

The user should not create an ACEE above 16MB and place the address in ASXBSENV or TCBSENV. If an ACEE is not specified, the address of the newly created ACEE is stored in the TCBSENV field of the task control block. If the ASXBSENV field contains binary zeros, the new ACEE address is also stored in the ASXBSENV field of the ASXB. If the ASXBSENV field is nonzero, it is not modified. The TCBSENV field is set unconditionally if ACEE= is not specified.

Notes:

1. If you omit USERID, GROUP, and PASSWRD and if you code ENVIR=CREATE or if ENVIR=CREATE is used as the default, you receive a return code of X'00' and obtain an ACEE that contains an asterisk (*) (X'5C') in place of the USERID and group name.
2. Specifying the ACEE= keyword prevents messages ICH70001I and ICH70002I from being issued and prevents message return processing for these messages if the MSGRTRN=YES keyword is also specified.

,ACTINFO=*account addr*

specifies the address of a field containing accounting information. This 144-byte area is passed to the RACINIT installation exit routine; it is not used by the RACROUTE REQUEST=VERIFY routine. The accounting field, if supplied, should have the following format:

- The first byte of the field contains the number (in binary) of accounting fields.
- The following bytes contain accounting fields, where each entry for an accounting field contains a 1-byte length field, followed by the data.

,APPL=*'applname'*
,APPL=*applname addr*

specifies the name of the application issuing the RACROUTE REQUEST=VERIFY to verify the user's authority to access the application. This saves the application from having to do a separate RACROUTE REQUEST=AUTH.

If an address is specified, the address must point to an 8-byte application name, left-justified and padded with blanks if necessary.

,ENCRYPT=YES
,ENCRYPT=NO

specifies whether RACROUTE REQUEST=VERIFY encodes the old password, the new password, and the OIDCARD data passed to it.

The default is YES.

YES Signifies that the data specified by the PASSWRD, NEWPASS, and OIDCARD keywords are not pre-encoded. RACROUTE REQUEST=VERIFY encodes the data before storing it in the user profile or using it to compare against stored data.

NO Signifies that the data specified by the PASSWRD, NEWPASS, and OIDCARD keywords are already encoded. RACROUTE REQUEST=VERIFY bypasses the encoding of this data before storing it in or comparing it against the user profile.

Note: If the password was shipped from another system, the encryption method must be the same on all systems utilizing the

password. For example, the RACF password authentication exit, ICHDEX01, must be identical on all systems.

,ENVIR=CREATE
,ENVIR=VERIFY
,ENVIR=CHANGE
,ENVIR=DELETE

specifies the action to be performed by the user initialization component regarding the ACEE.

The default is CREATE.

CREATE
The user should be verified and an ACEE created.

VERIFY
This call is not processed by RACF. However, it can be processed by the SAF installation exit (ICHRTX00) if desired. If the installation does not satisfy this request in the exit, the RACROUTE caller receives a return code of 4, with RACF return and reason codes of zero. Other security products can choose to process this call. Refer to your security product's documentation for details.

Note: Since a RACROUTE REQUEST=VERIFY,ENVIR=VERIFY can be issued from a non-authorized state, the SAF installation exit, in this case, runs in a non-authorized state. If the exit invokes a service that requires the issuer to be in an authorized state, it fails.

CHANGE
The ACEE should be modified according to other parameters specified on RACROUTE REQUEST=VERIFY. You can change only the connect group with this option.

DELETE
The ACEE should be deleted. This parameter should be used only if a previous RACROUTE REQUEST=VERIFY has completed successfully.

Recommendation: Issue a RACROUTE REQUEST=VERIFY,ENVIR=DELETE to delete only an ACEE that you created. See "Recommendations for changing or deleting an ACEE" on page 230 for other options.

ENVIR=CHANGE and ENVIR=DELETE cannot be specified with the parameters as identified in the following table.

RESTRICTED PARAMETERS	ENVIR=CHANGE	ENVIR=DELETE
ACTINFO=	X	X
APPL=	X	X
ENVRIN=	X	X
ENVROUT=	X	X
ERROROPT	X	X
EXENODE=	X	X
GROUP=		X
JOBNAME=	X	X
NEWPASS=	X	X
OIDCARD=	X	X
PASSWRD=	X	X
PGMNAME=	X	X
POE=	X	X
POENET=	X	X
REMOTE=	X	X
SECLABL=	X	X
SESSION=	X	X
SGROUP=	X	X
SNODE=	X	X
START=	X	X
STOKEN=	X	X
SUSERID=	X	X
TERMID=	X	X
TOKNIN=	X	X
TRUSTED=	X	X
USERID=	X	X
X500NAME	X	X

,ENVRIN=*envr data addr*

specifies the data structure that contains the information necessary to re-create a security environment.

The address points to a data structure defined in Table 9 on page 220. The data structure describes the storage location for the ENVR object. While the format of the data structure pointed to by ENVRIN is known to the RACROUTE invokers, the content of the object itself is known only to the external security product.

This keyword is recognized only when SYSTEM=YES and ENVIR=CREATE are also specified. In addition, when ENVRIN is specified, only the following keywords are recognized:

- ACEE
- SUBPOOL
- LOC
- TOKNOUT

- TERMID
- POE

Most RACROUTE REQUEST=VERIFY parameters are not recognized in ENVRIN processing because they do not affect the security environment created. The security environment is created based upon the information contained in the ENVR object. No security environment verification (such as GROUP checking or APPL checking) is performed. The ACEE, SUBPOOL, LOC, and TOKNOUT keywords are recognized as output parameters, and are used to specify the location of the security environment and to return information about the security environment. The ACEE that results from expanding the ENVR object might contain an X500 name, a USP, or both.

The TERMID and POE keywords are used to set/reset the terminal ID address field within the ACEE, ACEETRMP. If the original request used to create the ENVR specified the TERMID keyword, or the POE keyword with a session type of TSO, the ACEETRMP field set is based upon the keyword information. Since the ENVR can be used across address spaces or jobsteps, the issuer of the request must determine whether the data pointed to by the ACEETRMP field when the ENVR is processed is still valid.

The requester can use the TERMID or POE keyword (or both) to modify the ACEETRMP field in order to insure its validity. If the TERMID keyword is specified on an ENVRIN request, its address is placed in the ACEETRMP field. If the POE keyword is specified on the ENVRIN request and the port of entry class associated with the ENVR is the TERMINAL class, then its address is placed in the ACEETRMP field (overriding the TERMID address if TERMID was also specified). No class validation (such as checking the TERMID value against the TERMINAL class) is performed against these keyword values during ENVRIN processing.

,ENVROUT=*envr data addr*

specifies the data structure that is to hold the information used to describe the security environment that was just created.

This information can be used with the ENVRIN keyword to later re-create the security environment without causing I/O to the RACF database. The address points to a data structure defined in Table 9 on page 220. The data structure describes the storage location for the ENVR object. While the format of the data structure pointed to by ENVROUT is known to the RACROUTE invokers, the content of the object itself is determined by the external security product.

This keyword is only recognized when SYSTEM=YES and ENVIR=CREATE are also specified.

Figure 5 on page 220 and Table 9 on page 220 represent the ENVR data structure for use with the ENVRIN and ENVROUT keywords. The data structure must start on a fullword boundary.

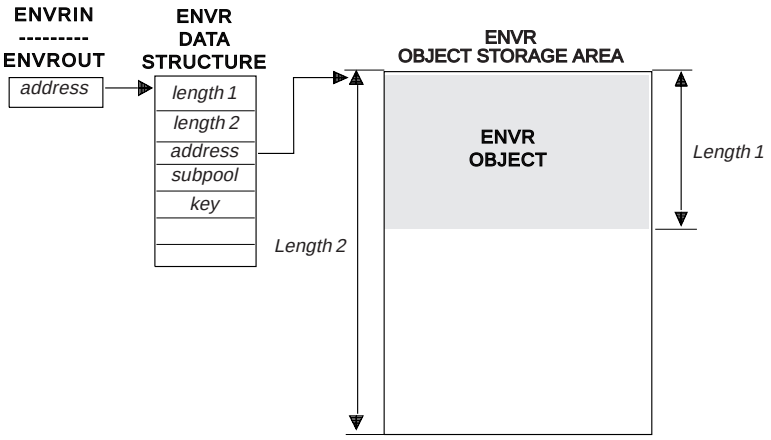

Figure 5. ENVR Data Structure

Table 9. Description of ENVR Data Structure

Description	Length (Bytes)	ENVROUT Usage	ENVRIN Usage
ENVR Object Length	4	Output	Input
ENVR Object Storage Area Length	4	Input/Output	Input
ENVR Object Storage Area Address	4	Input/Output	Input
ENVR Object Storage Area Subpool	1	Input	N/A
ENVR Object Storage Area Key	1	Input	N/A

The ENVR object storage area can be supplied by the caller or obtained by RACF. If supplied by the caller, it must be on a doubleword boundary and be associated with the job step task. If RACF obtains the storage area, it is on a doubleword boundary and is associated with the Job Step task. The storage is allocated based on the mode of the caller (LOC=ANY for 31-bit callers and LOC=BELOW for 24-bit callers). The following table shows how the field values affect ENVROUT processing.

Table 10. ENVROUT Storage Area Processing

ENVR Object Storage Area Length	ENVR Object Storage Area Address	Result
Zero	Any Value	RACF obtains minimum storage size needed to contain the ENVR Object. Storage size is returned in the ENVR Object storage area length. Storage address is returned in the ENVR Object storage area address.
Nonzero	Zero	RACF obtains storage size specified or the minimum storage size needed to contain the ENVR Object. Storage size is returned in the ENVR Object storage area length. Storage address is returned in the ENVR Object storage area address.

Table 10. ENVROUT Storage Area Processing (continued)

ENVR Object Storage Area Length	ENVR Object Storage Area Address	Result
Nonzero	Nonzero	RACF attempts to use the storage area provided. If the area is too small to contain the ENVR object, RACF frees the storage area provided and obtains the minimum storage size needed to contain the ENVR object. Storage size is returned in the ENVR object storage area length. Storage address is returned in the ENVR object storage area address.

Storage is obtained and freed in the subpool and key specified in the ENVR data structure.

Since the ENVR object length is returned to the caller, the ENVR object can be moved from one storage area to another. This value is supplied as an output to the caller. RACF does not attempt to use this value in either ENVROUT or ENVRIN processing.

The caller is responsible for freeing the ENVR object storage area when it is no longer needed. The length, address, subpool, and key to be used when doing the FREEMAIN are contained in the ENVR data structure.

The ENVR object returned by ENVROUT= is a relocatable object that can be copied from one storage location to another. The returned ENVR object, or a copy of the returned ENVR object, can be specified as input to the RACROUTE interface using the ENVRIN keyword, or to the initACEE callable service using the ENVR_in parameter.

The ENVR object can be passed to other systems, but this should be done with great care. The ENVR object should not be saved for a long period of time before being used as ENVRIN, and it should not be passed to systems that have different security information. The other systems should share the RACF database and have compatible RACF installation exits and class descriptor tables.

,ERROROPT=ABEND
,ERROROPT=NOABEND

specifies whether RACROUTE REQUEST=VERIFY will abend or not when an error occurs while it is accessing the RACF database.

The default is ABEND.

ABEND
When RACROUTE REQUEST=VERIFY encounters an error accessing the RACF database, issue a 483 abend.

NOABEND
When RACROUTE REQUEST=VERIFY encounters an error accessing the RACF database, 483 abends are suppressed. Instead, the request receives a SAF RC 8, RACF RC X'5C' and a RACF reason code of X'0483yyyy' where 'yyyy' is the RACF manager return code associated with the abend that would have been issued. If you are specifying the ERROROPT keyword with a specific release value, RELEASE=*value*, Table 11 on page 222 shows how RELEASE= values affect the

operation of the ERROROPT keyword:

Table 11. Relationship between the ERROROPT keyword and RELEASE= values

RELEASE	ACTION
7703	ERROROPT keyword is syntax checked only and an informational MNOTE indicating that the ERROROPT keyword is being ignored is returned. No abend suppression is performed. However, the SAF parameter list is built with the ERROROPT bit set. This allows programs which are assembled with RELEASE=7703 and RELEASE=7705 to take advantage of ERROROPT=NOABEND once the applications are executed in a z/OS Version 1 Release 3 (HBB7706) or later environment.
7705	
7706 and later	483 abends are replaced with a SAF return code of 8, a RACF return code of X'5C', and a RACF reason code of X'0483yyyy'. ″yyyy″ is the RACF manager return code associated with the abend that would have been issued.
All earlier releases	ERROROPT keyword is flagged as an unknown keyword.

,EXENODE=*execution node addr*
specifies the address of an area that contains a 1-byte length field followed by the name of the node on which the unit of work is to be executed. The node name cannot exceed eight bytes.

,GROUP=*group addr*
specifies the group specified by the user who has entered the system. The address points to a 1-byte length field, followed by the group name, which can be up to eight characters.

If the GROUP= keyword is omitted, “*” is the default.

,INSTLN=*parm list addr*
specifies the address of an area containing parameter information meaningful to the RACINIT installation exit routine. This area is passed to the installation exit when the exit routine is given control from the RACROUTE REQUEST=VERIFY routine.

The INSTLN parameter can be used by an installation having a user-verification or job-initiation application, and wanting to pass information from one installation module to the RACINIT installation exit routine.

,JOBNAME=*jobname addr*
specifies the address of the job name of a background job. The address points to an 8-byte area containing the job name (left-justified and padded with blanks if necessary). The JOBNAME parameter is used during authorization checking to verify the user’s authority to submit the job. It is passed to the installation exit routine. Also, if JOBNAME= is specified with the START= parameter, and the STARTED class is active, RACF uses the jobname during its processing to help determine the userid and group name that are assigned for the started task.

,LOC=BELOW
,LOC=ANY
specifies whether the ACEE and related data areas are to be allocated storage below 16MB (LOC=BELOW), or anywhere (LOC=ANY).

If the ACEE= parameter is not coded, or if the caller is executing in 24-bit mode, LOC=BELOW is the default and LOC=ANY is ignored if specified: In all other cases, the default is LOC=ANY.

,LOG=ASIS
,LOG=ALL
,LOG=NONE
specifies when log records are to be generated.

The default is ASIS.

ASIS Only those requests to create an ACEE that fail generate RACF log records.

ALL A request to create an ACEE, regardless of whether it succeeds or fails, generates a RACF log record. This applies when either ENVIR=CREATE or ENVIR=DELETE is specified.

NONE A request to create an ACEE, regardless of whether it succeeds or fails, does *not* generate a RACF log record. This applies when either ENVIR=CREATE or ENVIR=DELETE is specified.

LOG=NONE suppresses both messages and SMF records regardless of MSGSUPP=NO.

,LOGSTR=*logstr addr*
specifies the address of a 1-byte length field followed by character data to be written to the system-management-facilities (SMF) data set together with any RACF audit information, if logged.

,NEWPASS=*new password addr*
specifies the password that is to replace the user's currently defined password. The address points to a 1-byte length field, followed by the password, which can be up to eight characters.

The NEWPASS= keyword has no effect unless PASSCHK=YES is either defaulted to or explicitly specified. If the NEWPASS= keyword is specified with PASSCHK=NO, no error message is issued, but the password is not changed.

,OIDCARD=*oid addr*
specifies the address of the currently defined operator-identification card of the user who has entered the system. The address points to a 1-byte length field, followed by the operator ID card.

,PASSCHK=YES
,PASSCHK=NO
specifies whether the user's password or OIDCARD is to be verified.

YES RACROUTE REQUEST=VERIFY verifies the user's password or OIDCARD.

There are some circumstances where password checking does not occur even though PASSCHK=YES is specified. Some examples are surrogate processing (see *z/OS Security Server RACF Security Administrator's Guide*) or when the START or the ENVRIN keywords are specified.

NO The user's password or OIDCARD is not verified. And, if the logon is successful, no message is issued.

,PASSWRD=*password addr*
specifies the currently defined password of the user who has entered the system. The address points to either:

- a 1-byte length field, followed by the password, which can be up to eight characters, or
- a 1-byte length field, followed by a PassTicket, which is always eight bytes.

,PGMNAME=*programmer name addr*
specifies the address of the name of the user who has entered the system. This 20-byte area is passed to the RACINIT installation exit routine; it is not used by the RACROUTE REQUEST=VERIFY routine.

,POE=*port of entry addr*
specifies the address of the port of entry into the system. The address points to the name of the input device through which the user or job entered the system. For example, this could be the name of the input device through which the job was submitted or the terminal logged onto. The port of entry is an 8-character field that is left-justified and padded with blanks.

The port of entry becomes a part of the user's security token (UTOKEN). A flag in the UTOKEN uniquely identifies the RACF general-resource class to which the data in the POE field belongs: APPCPORT, TERMINAL, CONSOLE, or JESINPUT.

The RACF class, JESINPUT, provides the conditional access support for jobs entered into the system through a JES input device, and the CONSOLE class performs the same task for commands that originate from a console. The APPCPORT class provides conditional access support for users entering the system from a given LU (APPC port of entry).

The TERMINAL class covers the terminal used to log onto TSO.

When both the POE and TERMID keywords are specified, the POE keyword takes precedence. Information specified by POE= on an ENVIR=CREATE can be attached to the created ACEE and used in subsequent RACF processing. RACF does not make its own copy of this area when attaching this information to the created ACEE. This area must not be explicitly freed prior to the deletion of the ACEE. For the same reason, the area must reside in a non-task-related storage subpool so that implicit freeing of the area does not occur.

,POENET=*network name address*
specifies the address of a structure that consists of a 1-byte length field followed by up to an 8-byte field containing the network name of the partner LU. When specified with the POE parameter, the value specified for POENET is combined with the value specified for POE to create a network qualified name in the form *netid.luname*. The network qualified LU name is then used as the POE value during further processing. POENET is only valid with SESSION=APPCTP, and should not be specified with any other type of session. To specify the POENET parameter, you must specify RELEASE=2.6.

,REMOTE=YES
,REMOTE=NO
specifies whether or not the job came through the network. The default is REMOTE=NO.

,SECLABL=*seclabel addr*
specifies the address of an 8-byte, left-justified character field containing the security label, padded to the right with blanks.

To use this keyword, you must specify RELEASE=1.9 or a later release number.

An installation can use security labels to establish an association between a specific RACF security level (SECLEVEL) and a set of (zero or more) RACF security categories (CATEGORY). If it is necessary to use security labels to

prevent the unauthorized movement of data from one level to another when multiple levels of data are in use on the system at the same time, see *z/OS Security Server RACF Security Administrator's Guide* for further information.

,SESSION=*type*

specifies the session type to be associated with the request. Session types are literals. When the SESSION keyword is used in combination with the POE keyword, SESSION determines the class with which the POE keyword is connected.

When the session type is APPCTP, RACF requires APPL= and POE= also to be specified. The APPL= value should be the address of the local LU name, and the POE= value should be the address of the remote LU name.

The default session type is TSO.

The allowable session types and their associated POE classes are:

Session Type	Description	POE Class
APPCTP	An APPC transaction program	APPCPORT
COMMAND	A command	CONSOLE
CONSOPER	A console operator	CONSOLE
EXTBATCH	A job from external reader (EXT)	JESINPUT
EXTXBM	An execution batch monitor job	JESINPUT
INTBATCH	A batch job from internal reader (INT)	JESINPUT
INTXBM	An execution batch monitor job from internal reader (INT)	JESINPUT
MOUNT	A mount	None
NJEBATCH	A job from network job entry (NJE)	JESINPUT
NJEOPER	A network job entry operator	JESINPUT
NJEXBM	An network execution batch monitor job	JESINPUT
NJSYSOUT	A network SYSOUT	JESINPUT
OMVSSRV	An OMVS server application When OMVSSRV is specified, user profile statistics are updated daily at most. Audit records are only created when one of the following conditions are met: • an incorrect password is specified • the user ID has been revoked • a new password was provided	None
RJEBATCH	A batch job from remote job entry (RJE)	JESINPUT
RJEOPER	A remote job-entry operator	JESINPUT
RJEXBM	A remote execution batch monitor job	JESINPUT
STARTED	A started procedure of started task	None
SYSAS	A system address space	None
TKNUNKWN	An unknown user from NJE	JESINPUT
TSO	A TSO or other interactive session logon	TERMINAL

Note: When there is no POE class associated with the session type, the POE ID and session are preserved.

,SGROUP=*submitting group addr*
specifies the address of an area that contains a 1-byte length field followed by the group name of the user who submitted the unit of work. The group ID cannot exceed eight bytes.

,SMC=YES
,SMC=NO
specifies the use of the step-must-complete function of RACROUTE REQUEST=VERIFY processing.

YES RACROUTE REQUEST=VERIFY processing makes other tasks for the job step non-dispatchable.

NO The step-must-complete function is not used.

Notes:

1. SMC=NO should not be used if DADSM ALLOCATE/SCRATCH functions execute simultaneously in the same address space as the RACROUTE REQUEST=VERIFY function.
2. When an automatic direction of application updates RACROUTE REQUEST=VERIFY request is issued with the SMC keyword specified, the SMC keyword is not propagated.

,SNODE=*submitting node addr*
specifies the address of an area that contains a 1-byte length field followed by the name of the node from which the unit of work was submitted. The node name cannot exceed eight bytes.

,START=*procname addr*
specifies the procedure name of the started task for which the RACROUTE REQUEST=VERIFY is being performed. The address points to an 8-byte area containing the procedure name (left-justified and padded with blanks, if necessary). If START= is specified, REQUEST=VERIFY processing searches the started procedure table for the user ID and group to use for this REQUEST=VERIFY request. If the USERID and GROUP keywords are specified, REQUEST=VERIFY uses those values if it cannot find a STARTED class profile or an entry in the started procedure table that matches the specified procedure name (and jobname from JOBNAME= if the STARTED class is used.)

If START is specified, PASSWRD and OIDCARD should not be specified.

,STAT=ASIS
,STAT=NO
specifies whether the statistics controlled by the options specified on the RACF SETROPTS command should be maintained or ignored for this execution of RACROUTE REQUEST=VERIFY. This parameter also controls whether a message is to be issued when the logon is successful.

The default is ASIS.

Note: Messages are always issued if the RACROUTE REQUEST=VERIFY processing is unsuccessful.

ASIS The messages and statistics are controlled by the installation's current options on the RACF SETROPTS command.

Note: If SESSION=OMVSSRV is specified, RACF updates the date and time of the user access at most once per day overriding the STAT=ASIS keyword.

NO The statistics are not updated. And, if the logon is successful, no message is issued.

When STAT=NO is specified, the request does not result in the user being revoked even if the user's statistics have not been updated within *k* days (where *k* is the inactive period defined using SETROPTS INACTIVE(*k*)).

,STOKEN=*stoken addr*

specifies the address of the submitter's UTOKEN. The first byte contains the length of the UTOKEN, and the second byte contains the format version number. See ICHRUTKN mapping, "RUTKN: Resource/User Security Token" in *z/OS Security Server RACF Data Areas*.

If you specify an STOKEN, the USERID in the STOKEN becomes the submitter's ID in the ACEE's token unless you specified the submitter's ID (SUSER) keyword. If you did, that keyword becomes the submitter's ID in the ACEE's token. Likewise, if you specified GROUP in STOKEN, that becomes the submitter's group in the ACEE's token, unless you specified the submitter's group (SGROUP) keyword. The SESSION, port-of-entry (POE), and port-of-entry class (POEX) fields are also used from the STOKEN. The execution node becomes the resulting submit node and execution node, unless you specify the submit node (SNODE) or execution-node address (EXENODE) keywords. In all cases, the specified keywords on the request override the fields of the STOKEN, if one is specified.

Also, STOKEN is used for surrogate checking, security-label dominance, or JESJOBS checking unless different submitter-checking information is supplied.

,SUBPOOL=*subpool number*

specifies the storage subpool from which the ACEE and related storage are obtained. The value of the subpool can be literally specified or passed through a register. When using a register, the subpool number is the value of the least significant byte in the register.

If this parameter is not specified, it defaults to 255.

Notes:

1. Take care in selecting a subpool, as MVS makes certain assumptions about subpool usage and characteristics. In particular, using subpool 0 or 250, or any subpool documented in *z/OS MVS Programming: Assembler Services Guide* as having a storage key of USER (for example, 227-231, and 241) can give unpredictable results.

   In choosing a subpool, be aware that the storage obtained can be attached to MVS control blocks, so subpool characteristics need to be considered. Suppose, for example, that a task-related subpool is chosen for the ACEE; if you do not provide an anchor for the ACEE, in some cases the ACEE is attached to the MVS ASXB. When the task terminates, the ACEE storage is freed and the ASXB points to freemained storage.
2. If a common-area subpool (for example 226-228, 231, 239, 241, 245, 247, or 248) is used and not freed before the job terminates, then the job might show up in the exception reports of RMF (or other monitoring tools that support the tracking of common-area storage utilization) as owning common storage. Before your job terminates, it should issue a RACROUTE REQUEST=VERIFY, ENVIR=DELETE to free this common storage.

,SUSERID=*submitting userid addr*
specifies the address of an area that contains a 1-byte length field, followed by the user ID of the user who submitted the unit of work. The user ID cannot exceed eight bytes.

,SYSTEM=NO
,SYSTEM=YES
specifies whether the caller is in Supervisor State or System Key 0–7, or both.

NO indicates that the caller cannot guarantee to be in Supervisor State or System Key 0–7.

YES indicates that the caller is in Supervisor State and/or System Key 0–7.

SYSTEM=YES is used to provide a “fastpath” through RACROUTE REQUEST=VERIFY. However, unless ENVRIN is also specified, using any of the following keywords nullify the benefits of the fastpath:

```
EXENODE   OIDCARD   SNODE    SUSERID
JOBNAME   REMOTE    START    TOKNIN
NEWPASS   SGGROUP   STOKEN
```

When ENVRIN is specified, the indicated keywords are ignored, therefore the “fastpath” benefit is recognized.

The default is SYSTEM=NO.

Notes:

1. If the caller specifies SYSTEM=YES and is in neither Supervisor State *nor* System Key 0–7, the request abends.
2. Use of the SYSTEM=keyword requires that RELEASE=1.9.2 or later be specified.

,TERMID=*terminal addr*
specifies the address of the identifier for the terminal through which the user is accessing the system. The address points to an 8-byte area containing the terminal identifier. Information specified by TERMID= on an ENVIR=CREATE can be attached to the created ACEE and used in subsequent RACF processing. RACF does not make its own copy of this area when attaching this information to the created ACEE. This area must not be explicitly freed prior to the deletion of the ACEE. For the same reason, the area must reside in a non-task-related storage subpool so that implicit freeing of the area does not occur. If POE= is specified, the TERMID= area is not referred to in subsequent processing and can be freed at the user’s discretion.

,TOKNOUT=*utoken addr*
specifies an address that points to a user-provided area in which the UTOKEN is built. The mapping of the area is a 1-byte length field, followed by a 1-byte version code, followed by a 78-byte area in which to build the UTOKEN. This token is extracted from the ACEE built by this request.

,TOKNIN=*utoken addr*
specifies an address that points to a caller-provided area that contains an input UTOKEN. The mapping of the area is a 1-byte length field, followed by a 1-byte version code, followed by the UTOKEN itself, which can be 78 bytes long. The TOKNIN should have been previously obtained by RACROUTE REQUEST=VERIFY, VERIFYX, TOKENXTR or TOKENBLD.

,TRUSTED=YES

,TRUSTED=NO
specifies whether the unit of work is a member of the trusted computer base. Subsequent RACROUTE REQUEST=AUTH requests using an ACEE with this attribute (or a token extracted from the ACEE) have the following effects:

- Authorization checking is bypassed (this includes bypassing the checks for security classification on users and data).
- No statistics are updated.
- No audit records are generated, except those requested using the SETROPTS LOGOPTIONS command.

This is similar to having the started procedures table trusted bit on.

,USERID=*userid addr*
specifies the user identification of the user who has entered the system. The address points to a 1-byte length field, followed by the user ID, which can be up to eight characters.

If the USERID= keyword is omitted, "*" is the default.

To prevent a protected user ID from being used to logon, RACROUTE REQUEST=VERIFY processing checks if the protected user ID indicator is on in the user profile. If the indicator is on, RACROUTE REQUEST=VERIFY fails unless keywords such as PASSCHK=NO or START=PROCNAME have been specified to indicate that no password is needed. If a password is expected to be specified for a RACROUTE, it fails as an incorrect password attempt. This denies users the ability to logon with a protected user ID using a password, PassTicket or OID card. RACROUTE REQUEST=VERIFY processing returns the same RACROUTE return code, informational error message, and auditing as done for a normal system entry attempt with an incorrect password. However, the user profile is not updated, the revoke count is not incremented or reset, and the user is not revoked for exceeding the system limit for password attempts.

Note: Certificate authority certificates are associated with the user ID `irrcerta`, MULTIID certificate name filters are associated with the user ID `irrmulti`, and site certificates are associated with the user ID `irrsitec`. These user IDs cannot be used for any purpose other than anchoring certificate authority certificates, site certificates, or certificate name filters.

The `irrcerta`, `irrmulti`, and `irrsitec` user IDs are defined to RACF during IPL in a manner similar to the method used to define the user ID IBMUSER. These user IDs are added in revoked status and are not connected to any groups, insuring that they cannot be used as valid user IDs. RACROUTE REQUEST=VERIFYs performed for these user IDs fail due to the lack of connected groups.

X500NAME=X500 *name pair addr*
specifies the data structure that contains the X.500 name pair associated with this security environment. Before using the name pair, you need to obtain it from the digital certificate associated with the user ID. You can use the initACEE query function for this task. The name pair must contain both the issuer's name and the subject's name from the certificate.

The X500NAME parameter is valid only for the ENVIR=CREATE function of a REQUEST=VERIFY request. However, the ENVIR=CREATE function ignores the parameter or uses a different name pair in certain circumstances:

- The parameter is ignored if both the ENVRIN parameter and SYSTEM=YES are specified.
- When creating an ACEE from an ENVR object, the ENVR object might already contain an X.500 name pair, which is used.
- If a RACROUTE REQUEST=VERIFY, ENVIR=CREATE creates an ACEE for an undefined user, the X500NAME parameter is ignored.
- If the RACROUTE REQUEST=VERIFY request creates an ACEE for a RACF defined user, the ACEE points to a copy of the X.500 name pair structure in the same subpool as the ACEE. This X.500 name is used in auditing.

When an A-type or RX-type notation is used, *name pair addr* specifies the field name of the data structure. When register notation is used, it specifies the register containing the address of the data structure.

When specifying X500NAME=, you must also specify RELEASE=7705 or later. The data structure of the X.500 name pair is shown in Table 12.

Table 12. Description of X500NAME Data Structure

Offset	Length (Bytes)	Description
0	4	Length of entire X.500 name pair data structure
4	2	Length of issuer's name (1 to 255)
6	2	Length of subject's name (1 to 255)
8	1 to 255	Issuer's distinguished name
*	1 to 255	Subject's distinguished name

,MF=S
specifies the standard form for the RACROUTE REQUEST=VERIFY macro instruction.

Recommendations for changing or deleting an ACEE

Delete only an ACEE that you created. Issuing a RACROUTE REQUEST=VERIFY with ENVIR=DELETE specified to delete the existing ACEE can lead to problems if you were not the one who created that environment. The issuer of the ENVIR=CREATE that built the ACEE might have saved a pointer to it and might be expecting it to still be available later in processing. Note that this is the case for the initiator's ACEE. Also, if you delete an ACEE, you might lose tables anchored off that ACEE that are needed later in RACF processing. See *z/OS Security Server RACF Diagnosis Guide* for overview diagrams of ACEEs and related control blocks. These diagrams can be useful when diagnosing problems.

Note: When you delete an ACEE that has a third-party ACEE attached, the RACINIT pre- or post-exits get control again for the third-party ACEE as well as for the original ACEE being deleted.

If you make a copy of the ACEE and update fields, avoid passing it to RACF. Many RACF services anchor tables off the ACEE and refresh these tables when required. If you update fields in a copy, the original ACEE contains incorrect pointers that result in abends when the original is used or deleted. In general, it is recommended that you do not copy an ACEE.

If you need to delete or change an ACEE that you did not create, you can use one of the following methods.

- **Save and restore the current ACEE pointers:**

1. Save the current ACEE pointers from ASXBSENV and TCBSENV.
2. Clear ASXBSENV and TCBSENV.
3. Issue RACROUTE REQUEST=VERIFY ENVIR=CREATE.
4. At the end of processing
   a. Issue ENVIR=DELETE
   b. Restore ASXBSENV and TCBSENV to the original values.

- **Change the values in the current ACEE:**
  Issue RACROUTE REQUEST=VERIFY with ENVIR=CHANGE to change the values in the current ACEE.
- **Create, anchor, and delete a third-party ACEE:**
  Issue RACROUTE REQUEST=AUTH with USERID= and GROUPID=, causing RACF to create, anchor, and delete a third-party ACEE internally.

Return codes and reason codes

When you execute the macro, space for the RACF return code and reason code is reserved in the first two words of the RACROUTE parameter list. You can access them using the ICHSAFP mapping macro, by loading the ICHSAFP pointer with the label that you specified on the list form of the macro. When control is returned, register 15 contains the SAF return code.

Note to Reader

All return and reason codes are shown in hexadecimal. Also, please note that SAF return code is presented as SAF RC and RACF return code is presented as RACF RC in the following section.

SAF RC	Meaning
00	RACROUTE REQUEST=VERIFY has completed successfully.

RACF RC	Meaning
00	Indicates a normal completion.
04	Verify token information.

Reason Code	Meaning
0C	Indicates a TOKNIN was specified, but its length was too large.
10	Indicates an STOKEN was specified, but its length was too large.

SAF RC	Meaning
04	Requested function could not be completed. No RACF decision.

RACF RC	Meaning
00	ENVIR=VERIFY was specified without SAF installation exit processing.
04	The user profile is not defined to RACF.
20	RACF is not active.
58	RJE or NJE operator FACILITY class profile not found.

SAF RC	Meaning
08	Requested function has failed.

RACF RC	Meaning

04 The user profile is not defined to RACF.

08 The password is not authorized.

0C The password has expired.

10 The new password is not valid.

14 The user is not defined to the group.

18 RACROUTE REQUEST=VERIFY was failed by the installation exit routine.

1C The user's access has been revoked.

24 The user's access to the specified group has been revoked.

28 OIDCARD parameter is required but not supplied.

2C OIDCARD parameter is not valid for specified user.

30 The user is not authorized to the port of entry in the TERMINAL, JESINPUT, or CONSOLE class.

Reason Code	Meaning
00	Indicates the user is not authorized to the port of entry.
04	Indicates the user is not authorized to access the system on this day, or at this time of day.
08	Indicates the port of entry cannot be used on this day, or at this time of day. **Note:** The port of entry refers to the TERMINAL class, the JESINPUT class, and the CONSOLE class ports of entry.

34 The user is not authorized to use the application.

38 SECLABEL checking failed.

Reason Code	Meaning
04	MLACTIVE requires a SECLABEL; none was specified.
08	Indicates the user is not authorized to the SECLABEL.
0C	The system was in a multilevel secure status, and the dominance check failed.
10	Neither the user's nor the submitter's SECLABELs dominate. They are disjoint.

44 A default token is used as input token.

48 Indicates that an unprivileged user issued a RACROUTE REQUEST=VERIFY in a tranquil state (MLQUIET).

4C NODES checking failed.

Reason Code	Meaning
00	Submitter's node is not allowed access to execution node.
04	NJE failure: UACC of NONE for USERID type of NODES profile.
08	NJE failure: UACC of NONE for GROUP type of NODES profile.
0C	NJE failure: UACC of NONE for SECLABEL type of NODES profile.
10	NJE failure: No local submit node specified.
14	NJE failure: Reverification of translated values failed.

50 Indicates that a surrogate submit attempt failed.

Reason Code	Meaning
04	Indicates the SURROGAT class was inactive.
08	Indicates the submitter is not permitted by the user's SURROGAT class profile.
0C	Indicates that the submitter is not authorized to the SECLABEL under which the job is to run.

54 Indicates that a JESJOBS check failed.

5C Indicates that an error occurred while retrieving data from the RACF database.

Reason Code	Meaning
0483yyyy	An error occurred while RACROUTE REQUEST=VERIFY was accessing the RACF data base. ″yyyy″ is the RACF manager return code associated with the abend that would have been issued.

64 Indicates that the CHECK subparameter of the RELEASE keyword was specified on the execute form of the RACROUTE REQUEST=VERIFY macro; however, the list form of the macro does not have the same release parameter. Macro processing terminates.

Example 1

Operation: Use the standard form of the macro to do the following:

- Create an ACEE for the user ID and its default group.
- Chain the ACEE off either the current TCB or ASXB, or both, by not specifying the ACEE keyword.
- Verify that the user named USERNAME is a valid user.
- Verify that the password called PASSWORD is valid.

```
RACROUTE REQUEST=VERIFY ENVIR=CREATE,USERID=USERNAME,      X
         PASSWRD=PASSWORD,WORKA=RACWK
       .
       .
       .
RACWK   DS   CL512
```

Example 2

Operation: Use the standard form to do the following:

- Verify that the user named USERNAME is a valid user.
- Verify that the group named GROUPNAM is a valid group.
- Verify that USERNAME is defined to the group.
- Create an ACEE for the user and group and put its address in ACEEANCH.
- Specify that the user's password is not required.

```
RACROUTE REQUEST=VERIFY,ENVIR=CREATE,USERID=USERNAME,   X
         GROUP=GROUPNAM,ACEE=ACEEANCH,                  X
         PASSCHK=NO,WORKA=RACWK
       .
       .
       .
RACWK   DS   CL512
```

Example 3

Operation: Use the standard form of the macro to delete the ACEE of the current task or address space, or both.

```
RACROUTE REQUEST=VERIFY,ENVIR=DELETE,WORKA=RACWK
    .
    .
    .
RACWK  DS  CL512
```

RACROUTE REQUEST=VERIFY (list form)

The list form of the RACROUTE REQUEST=VERIFY macro is written as follows. Refer to the Standard Form of the RACROUTE REQUEST=VERIFY macro to determine additional parameters that are required by the time the RACROUTE service is invoked using the Execute form of the macro.

name	*name*: Symbol. Begin *name* in column 1.
b	One or more blanks must precede RACROUTE.
RACROUTE	
b	One or more blanks must follow RACROUTE.

REQUEST=VERIFY

,ACEE=*acee addr*	*acee addr*: A-type address
,ACTINFO=*account addr*	*account addr*: A-type address
,APPL=*'applname'* ,APPL=*applname addr*	*applname*: 1-8 character name *applname addr*: A-type address
,ENCRYPT=YES ,ENCRYPT=NO	**Default:** ENCRYPT=YES
,ENVIR=CREATE ,ENVIR=VERIFY ,ENVIR=CHANGE ,ENVIR=DELETE	**Default:** ENVIR=CREATE
,ENVRIN=*envr data addr*	*envr data addr*: A-type address
,ENVROUT=*envr data addr*	*envr data addr*: A-type address
,ERROROPT=ABEND ,ERROROPT=NOABEND	Default: ERROROPT=ABEND
,EXENODE=*execution node addr*	*execution node addr*: A-type address
,GROUP=*group addr*	*group addr*: A-type address
,INSTLN=*parm list addr*	*parm list addr*: A-type address
,JOBNAME=*jobname addr*	*jobname addr*: A-type address
,LOC=BELOW ,LOC=ANY ,LOC=ABOVE	**Default:** See parameter description. **Note:** LOC can be coded if REQUEST=VERIFY or REQUEST=LIST is coded.
,LOG=ASIS ,LOG=ALL ,LOG=NONE	**Default:** LOG=ASIS
,LOGSTR=*logstr addr*	*logstr addr*: A-type address
,NEWPASS=*new password addr*	*new password addr*: A-type address
,OIDCARD=*oid addr*	*oid addr*: A-type address

,PASSCHK=YES ,PASSCHK=NO	**Default:** PASSCHK=YES
,PASSWRD=*password addr*	*password addr*: A-type address
,PGMNAME=*programmer name addr*	*programmer name addr*: A-type address
,POE=*port of entry addr* ,POENET=*network name addr*	*port of entry addr*: A-type address or register (2) - (12) *network name addr*: A-type address or register (2) - (12)
,REMOTE=YES ,REMOTE=NO	**Default:** REMOTE=NO
,SECLABL=*seclabel addr*	*seclabel addr*: A-type address
,SESSION=*type*	*type*: Any valid session type **Default:** SESSION=TSO
,SGROUP=*submitting group addr*	*submitting group addr*: A-type address
,SMC=YES ,SMC=NO	**Default:** SMC=YES
,SNODE=*submitting node addr*	*submitting node addr*: A-type address
,START=*procname addr*	*procname addr*: A-type address
,STAT=ASIS ,STAT=NO	**Default:** STAT=ASIS
,STOKEN=*stoken addr*	*stoken addr*: A-type address
,SUBPOOL=*subpool number*	*subpool number*: Decimal digit 0–255 **Default:** See explanation of SUBPOOL keyword on page 227.
,SUSERID=*submitting userid addr*	*submitting user ID addr*: A-type address
,SYSTEM=NO ,SYSTEM=YES	**Default:** SYSTEM=NO **Note:** Use of the SYSTEM= keyword requires that RELEASE=1.9.2 be specified.
,TERMID=*terminal addr*	*terminal addr*: A-type address
,TOKNIN=*utoken addr*	*utoken addr*: A-type address

,TOKNOUT=*utoken addr*	*utoken addr*: A-type address
,USERID=*userid addr*	*userid addr*: A-type address
,TRUSTED=YES ,TRUSTED=NO	**Default:** TRUSTED=NO
,X500NAME=X500 *name pair addr*	*name pair addr*: A-type address

,MF=L

The parameters are explained under the standard form of the RACROUTE REQUEST=VERIFY macro instruction with the following exception:

,MF=L
specifies the list form of the RACROUTE REQUEST=VERIFY macro instruction.

RACROUTE REQUEST=VERIFY (execute form)

The execute form of the RACROUTE REQUEST=VERIFY macro is written as follows. Refer to the Standard Form of the RACROUTE REQUEST=VERIFY macro to determine additional parameters that are required by the time the RACROUTE service is invoked using the Execute form of the macro.

name	*name*: Symbol. Begin *name* in column 1.
b	One or more blanks must precede RACROUTE.

RACROUTE

b	One or more blanks must follow RACROUTE.

REQUEST=VERIFY

,ACEE=*acee addr*	*acee addr*: Rx-type address or register (2) - (12)
,ACTINFO=*account addr*	*account addr*: Rx-type address or register (2) - (12)
,APPL=*applname addr*	*applname addr*: Rx-type address or register (2) - (12)
,ENCRYPT=YES ,ENCRYPT=NO	
,ENVIR=CREATE ,ENVIR=VERIFY	

,ENVIR=CHANGE ,ENVIR=DELETE	
,ENVRIN=*envr data addr*	*envr data addr*: Rx-type address
,ENVROUT=*envr data addr*	*envr data addr*: Rx-type address
,ERROROPT=ABEND ,ERROROPT=NOABEND	Default: ERROROPT=ABEND
,EXENODE=*execution node addr*	*execution node addr*: Rx-type address or register (2) - (12)
,GROUP=*group addr*	*group addr*: Rx-type address or register (2) - (12)
,INSTLN=*parm list addr*	*parm list addr*: Rx-type address or register (2) - (12)
,JOBNAME=*jobname addr*	*jobname addr*: Rx-type address or register (2) - (12)
,LOC=BELOW ,LOC=ANY ,LOC=ABOVE	**Note:** LOC can be coded if REQUEST=VERIFY or REQUEST=LIST is coded.
,LOG=ASIS ,LOG=ALL ,LOG=NONE	
,LOGSTR=*logstr addr*	*logstr addr*: Rx-type address or register (2) - (12)
,NEWPASS=*new password addr*	*new password addr*: Rx-type address or register (2) - (12)
,OIDCARD=*oid addr*	*oid addr*: Rx-type address or register (2) - (12)
,PASSCHK=YES ,PASSCHK=NO	
,PASSWRD=*password addr*	*password addr*: Rx-type address or register (2) - (12)
,PGMNAME=*programmer name addr*	*programmer name addr*: Rx-type address or register *programmer name addr*: Rx-type address or register (2) - (12)
,POE=*port of entry addr*	*port of entry addr*: Rx-type address or register (2) - (12)
,POENET=*network name addr*	*network name addr*: A-type address or register (2) - (12)
,RELEASE=*number*	*number*: See Standard Form

,RELEASE=(,CHECK) ,RELEASE= (*number*,CHECK)	**Default:** RELEASE=1.6
,REMOTE=YES ,REMOTE=NO	
,SECLABL=*seclabel addr*	*seclabel addr*: Rx-type address or register (2) - (12)
,SESSION=*type*	*type*: Any valid session type
,SMC=YES ,SMC=NO	
,SNODE=*submitting node addr*	*submitting node addr*: Rx-type address or register (2) - (12)
,SGROUP=*submitting group addr*	*submitting group addr*: Rx-type address or register (2) - (12)
,START=*procname addr*	*procname addr*: Rx-type address or register (2) - (12)
,STAT=ASIS ,STAT=NO	
,STOKEN=*stoken addr*	*stoken addr*: Rx-type address or register (2) - (12)
,SUBPOOL=*subpool number*	*subpool number*: Decimal digit 0–255
,SUSERID=*submitting userid addr*	*submitting userid addr*: Rx-type address or register (2) - (12)
,SYSTEM=NO ,SYSTEM=YES	**Note:** Use of the SYSTEM= keyword requires that RELEASE=1.9.2 be specified.
,TERMID=*terminal addr*	*terminal addr*: Rx-type address or register (2) - (12)
,TOKNIN=*utoken addr*	*utoken addr*: Rx-type address or register (2) - (12)
,TOKNOUT=*utoken addr*	*utoken addr*: Rx-type address or register (2) - (12)
,TRUSTED=YES ,TRUSTED=NO	
,USERID=*userid addr*	*userid addr*: Rx-type address or register (2) - (12)
,X500NAME=X500 *name pair addr*	*name pair addr*: Rx-type address or register (2) - (12)
,MF=(E,*ctrl addr*)	*ctrl addr*: Rx-type address or register (1) or (2) - (12)

The parameters are explained under the standard form of the RACROUTE REQUEST=VERIFY macro instruction with the following exceptions:

,MF=(E,*ctrl addr***)**
specifies the execute form of the RACROUTE REQUEST=VERIFY macro, using a remote, control-program parameter list.

,RELEASE=*number*
,RELEASE=(,CHECK)
,RELEASE=(*number***,CHECK)**
specifies the RACF release level of the parameter list to be generated by this macro.

To use the parameters associated with a release, you must specify the number of that release or a later release number. If you specify an earlier release level, the parameter is not accepted by macro processing, and an error message is issued at assembly time.

The default is RELEASE=1.6.

When you specify the RELEASE keyword, checking is done at assembly time. Compatibility between the list and execute forms of the RACROUTE REQUEST=VERIFY macro is validated at execution time if you specify the CHECK subparameter on the execute form of the macro.

The size of the list form expansion must be large enough to accommodate all parameters defined by the RELEASE keyword on the execute form of the macro. Otherwise, when CHECK processing is requested, the execute form of the macro is not done, and a return code of X'64' is returned.

RACROUTE REQUEST=VERIFY (modify form)

The modify form of the RACROUTE REQUEST=VERIFY macro is written as follows. Refer to the Standard Form of the RACROUTE REQUEST=VERIFY macro to determine additional parameters that are required by the time the RACROUTE service is invoked using the Execute form of the macro.

name	*name*: Symbol. Begin *name* in column 1.
b	One or more blanks must precede RACROUTE.
RACROUTE	
b	One or more blanks must follow RACROUTE.
REQUEST=VERIFY	
,ACEE=*acee addr*	*acee addr*: Rx-type address or register (2) - (12)
,ACTINFO=*account addr*	*account addr*: Rx-type address or register (2) - (12)
,APPL=*applname addr*	*applname addr*: Rx-type address or register (2) - (12)

,ENCRYPT=YES ,ENCRYPT=NO	
,ENVIR=CREATE ,ENVIR=VERIFY ,ENVIR=CHANGE ,ENVIR=DELETE	
,ENVRIN=*envr data addr*	*envr data addr*: A-type address or register (2) - (12)
,ENVROUT=*envr data addr*	*envr data addr*: A-type address or register (2) - (12)
,ERROROPT=ABEND ,ERROROPT=NOABEND	Default: ERROROPT=ABEND
,EXENODE=*execution node addr*	*execution node addr*: Rx-type address or register (2) - (12)
,GROUP=*group addr*	*group addr*: Rx-type address or register (2) - (12)
,INSTLN=*parm list addr*	*parm list addr*: Rx-type address or register (2) - (12)
,JOBNAME=*jobname addr*	*jobname addr*: Rx-type address or register (2) - (12)
,LOC=BELOW ,LOC=ANY ,LOC=ABOVE	**Note:** LOC can be coded if REQUEST=VERIFY or REQUEST=LIST is coded.
,LOG=ASIS ,LOG=ALL ,LOG=NONE	
,LOGSTR=*logstr addr*	*logstr addr*: Rx-type address or register (2) - (12)
,NEWPASS=*new password addr*	*new password addr*: Rx-type address or register (2) - (12)
,OIDCARD=*oid addr*	*oid addr*: Rx-type address or register (2) - (12).
,PASSCHK=YES ,PASSCHK=NO	
,PASSWRD=*password addr*	*password addr*: Rx-type address or register (2) - (12)
,PGMNAME=*programmer name addr*	*programmer name addr*: Rx-type address or register (2) - (12)

,POE=*port of entry addr*	*port of entry addr*: Rx-type address or register (2) - (12)
,POENET=*network name addr*	*network name addr*: A-type address or register (2) - (12)
,REMOTE=YES ,REMOTE=NO	
,SECLABL=*seclabel addr*	*seclabel addr*: Rx-type address or register (2) - (12)
,SESSION=*type*	*type*: Any valid session type
,SGROUP=*submitting group addr*	*submitting group addr*: Rx-type address or register (2) - (12)
,SMC=YES ,SMC=NO	
,SNODE=*submitting node addr*	*submitting node addr*: Rx-type address or register (2) - (12)
,START=*procname addr*	*procname addr*: Rx-type address or register (2) - (12)
,STAT=ASIS ,STAT=NO	
,STOKEN=*stoken addr*	*stoken addr*: Rx-type address or register (2) - (12)
,SUBPOOL=*subpool number*	*subpool number*: Decimal digit 0–255
,SUSERID=*submitting userid addr*	*submitting userid addr*: Rx-type address or register (2) - (12)
,SYSTEM=NO ,SYSTEM=YES	
,TERMID=*terminal addr*	*terminal addr*: Rx-type address or register (2) - (12)
,TOKNIN=*utoken addr*	*utoken addr*: Rx-type address or register (2) - (12)
,TOKNOUT=*utoken addr*	*utoken addr*: Rx-type address or register (2) - (12)
,TRUSTED=YES ,TRUSTED=NO	
,USERID=*userid addr*	*userid addr*: Rx-type address or register (2) - (12)
,X500NAME=X500 *name pair addr*	*name pair addr*: Rx-type address or register (2) - (12)
,MF=(M,*ctrl addr*)	*ctrl addr*: Rx-type address or register (1) or (2) - (12)

The parameters are explained under the standard form of the RACROUTE REQUEST=VERIFY macro instruction with the following exception:

,MF=(M,*ctrl addr***)**
specifies the modify form of the RACROUTE REQUEST=VERIFY macro, using a remote, control-program parameter list.

RACROUTE REQUEST=VERIFYX: Verify user and return a UTOKEN

The RACROUTE REQUEST=VERIFYX macro verifies a user and builds a UTOKEN based on the information passed in the parameter list, and handles the propagation of submitter ID.

If the caller specifies an already-existing STOKEN to VERIFYX, and if the caller additionally specifies any UTOKEN keywords on the request, the UTOKEN keywords that are specified override the corresponding parameters in the STOKEN that was passed. Thus, if the caller specifies an STOKEN, the caller should not specify any additional parameters unless the caller wants to supplement STOKEN information.

The following order of priority exists for replacing the fields in the existing TOKEN:

- Keywords specified on the request take precedence over corresponding fields in the TOKNIN and STOKEN parameters.
- All fields within the token specified by the TOKNIN keyword take precedence over those specified by STOKEN.
- The fields for the submitter's ID, submitter's group, submit node, execution node, session, port of entry and its class, as obtained from the token specified by the STOKEN keyword are last.

If you do not want certain fields overridden, do not specify keywords for those fields.

To use this service, you must specify RELEASE=1.9 or a later release number.

If RACF is not active or not installed and the installation is running on MVS 2.2 or higher, then SAF builds a default UTOKEN to satisfy the VERIFYX request. This action is indicated by the bit TOKDFLT being turned on in the mapped UTOKEN. If SAF cannot build a complete UTOKEN, it returns a UTOKEN containing all the information available from the RACROUTE parameter list. SAF returns the default UTOKEN at the address specified on the TOKNOUT keyword. If a valid security label was not specified on the call and could not be obtained from RACF, and if the system was in MLACTIVE fail, SAF returns a default SECLABEL of SYSHIGH if the caller specified TRUSTED=YES, and a value of SYSLOW if the caller specified TRUSTED=NO. SAF ensures the correct propagation of security information from a submitter to the unit of work if session type is INTBATCH or INTXBM. SAF also returns an error token (TOKERR) if verification fails.

VERIFYX should not be used at the 1.3.5 or 2.1.0 levels of MVS because UTOKENs cannot be returned at these levels.

To issue the RACROUTE REQUEST=VERIFYX macro, the calling module must be authorized (APF-authorized, in System Key 0–7, or in Supervisor State).

The caller cannot hold any locks when issuing RACROUTE REQUEST=VERIFYX.

Automatic direction of application updates does not propagate RACROUTE REQUEST=VERIFYX requests that update the RACF database; however, the following ICHEINTY requests issued by RACROUTE REQUEST=VERIFYX are propagated:

- The ICHEINTY setting the revoke flag in the user profile when a user is being revoked due to inactivity or incorrect password attempts.
- The ICHEINTY increasing the revoke count when a user enters an incorrect password.
- The ICHEINTY that resets the revoke count to 0 when a user enters a valid password.

The ICHEINTY issued by RACROUTE REQUEST=VERIFYX to change the password in the user's profile is not eligible for propagation by automatic direction of application updates because it is already eligible for propagation by automatic password direction.

RACROUTE REQUEST=VERIFYX (standard form)

The standard form of the RACROUTE REQUEST=VERIFYX macro is written as follows. For a description of additional keywords that you can code and additional parameters that are required on the RACROUTE request, but that are not specific to this request type, see "RACROUTE (standard form)" on page 13.

Note

Application programs must be structured so that a task requesting RACF services does not do so while other I/O initiated by the task is outstanding. If such I/O is required, the task should either wait for the other I/O to complete before requesting RACF services, or the other I/O should be initiated under a separate task. This is necessary to assure proper processing in recovery situations.

name	*name*: Symbol. Begin *name* in column 1.
b	One or more blanks must precede RACROUTE.
RACROUTE	
b	One or more blanks must follow RACROUTE.
REQUEST=VERIFYX	
,TOKNOUT=*utoken addr*	*utoken addr*: A-type address or register (2) - (12)
,ACTINFO=*account addr*	*account addr*: A-type address or register (2) - (12)
,APPL='*applname*'	*applname*: 1-8 character name

,APPL=*applname addr*	*applname addr*: A-type address or register (2) - (12)
,ENCRYPT=YES ,ENCRYPT=NO	**Default:** ENCRYPT=YES
,ERROROPT=ABEND ,ERROROPT=NOABEND	**Default:** ERROROPT=ABEND
,EXENODE=*execution node addr*	*execution node addr*: A-type address or register (2) - (12)
,GROUP=*group addr*	*group addr*: A-type address or register (2) - (12)
,INSTLN=*parm list addr*	*parm list addr*: A-type address or register (2) - (12)
,JOBNAME=*jobname addr*	*jobname addr*: A-type address or register (2) - (12)
,LOG=ALL ,LOG=ASIS ,LOG=NONE	**Default:** LOG=ASIS
,LOGSTR=*logstr addr*	*logstr addr*: A-type address or register (2) - (12)
,NEWPASS=*new password addr*	*new password addr*: A-type address or register (2) - (12)
,OIDCARD=*oid addr*	*oid addr*: A-type address or register (2) - (12)
,PASSCHK=YES ,PASSCHK=NO	**Default:** PASSCHK=YES
,PASSWRD=*password addr*	*password addr*: A-type address or register (2) - (12)
,PGMNAME=*programmer name addr*	*programmer name addr*: A-type address or register (2) - (12)
,POE=*port of entry addr* ,POENET=*network name addr*	*port of entry addr*: A-type address or register (2) - (12) *network name addr*: A-type address or register (2) - (12)
,REMOTE=YES ,REMOTE=NO	**Default:** REMOTE=NO
,SECLABL=*seclabel addr*	*seclabel addr*: A-type address or register (2) - (12)
,SESSION=*type*	*type*: Any valid session type **Default:** SESSION=TSO
,SGROUP=*submitting group addr*	*submitting group addr*: A-type address or register (2) - (12)

,SNODE=*submitting node addr*	*submitting node addr*: A-type address or register (2) - (12)
,SMC=YES ,SMC=NO	**Default:** SMC=YES
,START=*procname addr*	*procname addr*: A-type address or register (2) - (12)
,STAT=ASIS ,STAT=NO	**Default:** STAT=ASIS
,STOKEN=*stoken addr*	*stoken addr*: A-type address or register (2) - (12)
,SUSERID=*submitting userid addr*	*submitting userid addr*: A-type address or register (2) - (12)
,TERMID=*terminal addr*	*terminal addr*: A-type address or register (2) - (12)
,TOKNIN=*utoken addr*	*utoken addr*: A-type address or register (2) - (12)
,TRUSTED=YES ,TRUSTED=NO	**Default:** TRUSTED=NO
,USERID=*userid addr*	*userid addr*: A-type address or register (2) - (12)
,MF=S	

The parameters are explained as follows:

,ACTINFO=*account addr*
specifies the address of a field containing accounting information. This 144-byte area is passed to the RACINIT installation exit routine; it is not used by the RACROUTE REQUEST=VERIFY routine. The accounting field, if supplied, should have the following format:

- The first byte of the field contains the number (binary) of accounting fields.
- The following bytes contain accounting fields, where each entry for an accounting field contains a 1-byte length field, followed by the field.

,APPL=*'applname'*
,APPL=*applname addr*
specifies the name of the application issuing the RACROUTE REQUEST=VERIFYX. If an address is specified, the address must point to an 8-byte application name, left justified and padded with blanks if necessary.

,ENCRYPT=YES
,ENCRYPT=NO
specifies whether RACROUTE REQUEST=VERIFYX encodes the old password, the new password, and the OIDCARD data passed to it.

The default is YES.

YES Data specified by the PASSWRD, NEWPASS, and OIDCARD keywords are not pre-encoded. RACROUTE REQUEST=VERIFYX encodes the data before storing it in the user profile or using it to compare against stored data.

NO Data specified by the PASSWRD, NEWPASS, and OIDCARD keywords is already encoded. RACROUTE REQUEST=VERIFYX bypasses the encoding of this data before storing it in, or comparing it against, the user profile.

Note: If the password was shipped from another system, the encryption method must be the same on all systems utilizing the password. For example, the RACF password authentication exit, ICHDEX01, must be identical on all systems.

,ERROROPT=ABEND
,ERROROPT=NOABEND

specifies whether RACROUTE REQUEST=VERIFYX will abend or not when an error occurs while it is accessing the RACF database.

The default is ABEND.

ABEND
When RACROUTE REQUEST=VERIFYX encounters an error accessing the RACF database, issue a 483 abend.

NOABEND
When RACROUTE REQUEST=VERIFYX encounters an error accessing the RACF database, 483 abends are suppressed. Instead, the request receives a SAF RC 8, RACF RC X'5C' and a RACF reason code of X'0483yyyy' where 'yyyy' is the RACF manager return code associated with the abend that would have been issued. If you are specifying the ERROROPT keyword with a specific release value, RELEASE=*value*, the Table 13 shows how RELEASE=values affect the operation of the ERROROPT keyword:

Table 13. Relationship between the ERROROPT keyword and RELEASE= values

RELEASE	ACTION
7703	ERROROPT keyword is syntax checked only and an informational MNOTE indicating that the ERROROPT keyword is being ignored is returned. No abend suppression is performed. However, the SAF parameter list is built with the ERROROPT bit set. This allows programs which are assembled with RELEASE=7703 and RELEASE=7705 to take advantage of ERROROPT=NOABEND once the applications are executed in a z/OS Version 1 Release 3 (HBB7706) or later environment.
7705	
7706 and later	483 abends are replaced with a SAF return code of 8, a RACF return code of X'5C', and a RACF reason code of X'0483yyyy'. ″yyyy″ is the RACF manager return code associated with the abend that would have been issued.
All earlier releases	ERROROPT keyword is flagged as an unknown keyword.

,EXENODE=*execution node addr*
specifies the address of an area that contains a 1-byte length field followed by the name of the node on which the unit of work is to be executed. The node name cannot exceed eight bytes.

,GROUP=*group addr*
specifies the group of the user who has entered the system. The address points to a 1-byte length field, followed by the group name, which can be up to eight characters long.

,INSTLN=*parm list addr*
specifies the address of an area containing parameter information meaningful to the RACINIT installation exit routine. This area is passed to the installation exit when the exit routine is given control from the RACROUTE REQUEST=VERIFY routine.

The INSTLN parameter can be used by an installation having a user verification or job initiation application, and wanting to pass information from one installation module to the installation exit routine.

,JOBNAME=*jobname addr*
specifies the address of the job name of a background job. The address points to an 8-byte area containing the job name (left-justified and padded with blanks if necessary). If JOBNAME= is specified with the START= parameter, and the STARTED class is active, RACF uses the jobname during its processing to help determine the userid and group name that are assigned for the started task.

Note: The JOBNAME parameter is used by RACF during RACROUTE REQUEST=VERIFYX authorization checking to verify the user's authority to submit the job. It is also passed to the installation RACINIT exit routine.

,LOG=ALL
,LOG=ASIS
,LOG=NONE
specifies when log records are to be generated.

The default is LOG=ASIS.

ALL Any request to create an ACEE, regardless of whether it succeeds or fails, generates a RACF log record.

ASIS Only those attempts to create an ACEE that fail generate RACF log records.

NONE A request to create an ACEE, regardless of whether it succeeds or fails, does *not* generate a RACF log record.

LOG=NONE suppresses both messages and SMF records regardless of MSGSUPP=NO.

,LOGSTR=*logstr addr*
specifies the address of a 1-byte length field followed by character data that is written to the SMF data set, together with RACF audit information.

,NEWPASS=*new password addr*
specifies the password to replace the user's currently defined password. The address points to a 1-byte length field, followed by the password, which can be up to eight characters long.

,OIDCARD=*oid addr*
specifies the address of the currently defined operator-identification card of the user who has entered the system. The address points to a 1-byte length field, followed by the operator ID card.

,PASSCHK=YES
,PASSCHK=NO
specifies whether or not the user's password or OIDCARD is to be verified.

YES RACROUTE REQUEST=VERIFYX verifies the user's password or OIDCARD.

There are some circumstances where password checking does not occur even though PASSCHK=YES is specified. Some examples are surrogate processing (see *z/OS Security Server RACF Security Administrator's Guide*) or when the START or the ENVRIN keywords are specified.

NO The user's password or OIDCARD is not verified.

,PASSWRD=*password addr*
specifies the currently defined password of the user who has entered the system. The address points to either:

- a 1-byte length field, followed by the password, which can be up to eight characters, or
- a 1-byte length field, followed by a PassTicket, which is always eight bytes.

,PGMNAME=*programmer name addr*
specifies the address of the name of the user who has entered the system. This 20-byte area is passed to the RACINIT installation exit routine; it is not used by RACF.

,POE=*port of entry addr*
specifies the address of the port of entry into the system. The address points to the name of the input device through which the user or job entered the system. For example, this could be the name of the input device through which the job was submitted or of the terminal logged onto. The port of entry is an 8-character field that is left-justified and padded with blanks.

The port of entry becomes a part of the user's security token (UTOKEN). A flag in the UTOKEN uniquely identifies the RACF general-resource class to which the data in the POE field belongs: APPCPORT, TERMINAL, CONSOLE, or JESINPUT.

The RACF class JESINPUT provides the conditional access support for jobs entered into the system through a JES input device. The CONSOLE class performs the same task for commands that originate from a console. In addition, the APPCPORT class provides conditional access support for users entering the system from a given LU (APPC port of entry).

The TERMINAL class covers the terminal used to log onto TSO.

When both the POE and TERMID keywords are specified, the POE keyword takes precedence.

,POENET=*network name address*
specifies the address of a structure that consists of a 1-byte length field followed by up to an 8-byte field containing the network name of the partner LU. When specified with the POE parameter, the value specified for POENET is combined with the value specified for POE to create a network qualified name in the form *netid.luname*. The network qualified LU name is then used as the

POE value during further processing. POENET is only valid with SESSION=APPCTP, and should not be specified with any other type of session. To specify the POENET parameter, you must specify RELEASE=2.6.

,REMOTE=YES
,REMOTE=NO
specifies whether or not the job came through the network. The default is REMOTE=NO.

,SECLABL=*seclabel addr*
specifies the address of an 8-byte, left-justified character field containing the security label, padded to the right with blanks.

An installation can use security labels to establish an association between a specific RACF security level (SECLEVEL) and a set of (zero or more) RACF security categories (CATEGORY). If it is necessary to use security labels to prevent the unauthorized movement of data from one level to another when multiple levels of data are in use on the system at the same time, see *z/OS Security Server RACF Security Administrator's Guide* for further information.

,SESSION=*type*
specifies the session type to be associated with the request. Session types are literals. When the SESSION keyword is used in combination with the POE keyword, SESSION determines the class with which the POE keyword is connected.

When the session type is APPCTP, RACF requires APPL= and POE= also to be specified. The APPL= value should be the address of the local LU name, and the POE= value should be the address of the remote LU name.

The default session type is TSO.

The allowable session types and their associated POE classes are:

Session Type	Description	POE Class
APPCTP	An APPC transaction program	APPCPORT
COMMAND	A command	CONSOLE
CONSOPER	A console operator	CONSOLE
EXTBATCH	A job from external reader (EXT)	JESINPUT
EXTXBM	An execution batch monitor job	JESINPUT
INTBATCH	A batch job from internal reader (INT)	JESINPUT
INTXBM	An execution batch monitor job from internal reader (INT)	JESINPUT
MOUNT	A mount	None
NJEBATCH	A job from network job entry (NJE)	JESINPUT
NJEOPER	A network job-entry operator	JESINPUT
NJEXBM	An network execution batch monitor job	JESINPUT
NJSYSOUT	A network SYSOUT	JESINPUT
OMVSSRV	An OMVS server application When OMVSSRV is specified, user profile statistics are updated daily at most. Audit records are only created when one of the following conditions are met: • an incorrect password is specified • the user ID has been revoked • a new password was provided	None

Session Type	Description	POE Class
RJEBATCH	A batch job from remote job entry (RJE)	JESINPUT
RJEOPER	A remote job-entry operator	JESINPUT
RJEXBM	A remote execution batch monitor job	JESINPUT
STARTED	A started procedure of started task	None
SYSAS	A system address space	None
TKNUNKWN	An unknown user from NJE	JESINPUT
TSO	A TSO or other interactive session logon	TERMINAL

Note: When no POE class is associated with the session type, the POE ID and session are preserved.

,SGROUP=*submitting group addr*
specifies the address of an area that contains a 1-byte length field followed by the group name of the user who submitted the unit of work. The group name cannot exceed eight bytes.

,SMC=YES
,SMC=NO
specifies the use of the step-must-complete function of RACROUTE REQUEST=VERIFYX processing.

YES RACROUTE REQUEST=VERIFYX processing makes other tasks for the step non-dispatchable.

NO The step-must-complete function is not used.

Note: SMC=NO should not be used if DADSM ALLOCATE/SCRATCH functions execute simultaneously in the same address space as the RACROUTE REQUEST=VERIFYX function.

,SNODE=*submitting node addr*
specifies the address of an area that contains a 1-byte length field, followed by the name of the node from which the unit of work was submitted. The node name cannot exceed eight bytes.

,START=*procname addr*
specifies the procedure name of a started task for which the RACROUTE REQUEST=VERIFYX is being performed. The address points to an 8-byte area containing the procedure name (left-justified and padded with blanks if necessary). If START= is specified, REQUEST=VERIFYX processing searches the started-procedures table for the user ID and group to use for this REQUEST=VERIFYX request. If the USERID and GROUP keywords are specified, REQUEST=VERIFYX uses those values if it cannot find a STARTED class profile or an entry in the started procedure table that matches the specified procedure name (and jobname from JOBNAME= if the STARTED class is used.)

If START is specified, PASSWRD and OIDCARD should not be specified.

,STAT=ASIS
,STAT=NO
specifies that no statistics are updated for this execution of RACROUTE REQUEST=VERIFYX, and that if logon is successful, no message is issued.

When STAT=NO is specified, the request does not result in the user being revoked even if the user's statistics have not been updated within *k* days (where *k* is the inactive period defined using SETROPTS INACTIVE(*k*)).

Notes:

1. The default (STAT=ASIS) is processed the same as STAT=NO.
2. Messages are always issued if the RACROUTE REQUEST=VERIFYX processing is unsuccessful.

,STOKEN=*stoken addr*
specifies the address of the submitter's security token (UTOKEN). The first byte contains the length of the UTOKEN, and the second byte contains the format version number. See ICHRUTKN mapping, See "RUTKN: Resource/User Security Token" in *z/OS Security Server RACF Data Areas*.

If you specify STOKEN, the user ID in STOKEN becomes the submitter's ID in TOKNOUT, unless you specified the submitter's ID (SUSER) keyword. If you did, that keyword becomes the submitter's ID in TOKNOUT. Likewise, if you specified GROUP in the STOKEN, that becomes the submitter's group in TOKNOUT, unless you specified the submitter's group (SGROUP) keyword. The SESSION, port-of-entry (POE), and port-of-entry class (POEX) fields are also used from the STOKEN. The execution node becomes the resulting submit node and execution node unless you specify the submit node (SNODE) or execution node (EXENODE) keywords. In all cases, the specified keywords on the request override the fields of the STOKEN, if one is specified.

Also, STOKEN is used unless different submitter-checking information, such as surrogate checking, security-label dominance, or JESJOBS checking is specified.

,SUSERID=*submitting userid addr*
specifies the address of an area that contains a 1-byte length field followed by the user ID of the user who submitted the unit of work. The user ID cannot exceed eight bytes.

,TERMID=*terminal addr*
specifies the address of the identifier for the terminal through which the user is accessing the system. The address points to an 8-byte area containing the terminal identifier. The area must reside in a storage subpool not related to any task.

,TOKNIN=*utoken addr*
specifies an address that points to a caller-provided area that contains an input UTOKEN. The mapping of the area is a 1-byte length field, followed by a 1-byte version code, followed by the UTOKEN itself, which can be 78 bytes long. The TOKNIN should have been previously obtained by RACROUTE REQUEST=VERIFY, VERIFYX, TOKENXTR or TOKENBLD.

,TOKNOUT=*output token addr*
specifies the address of the caller-provided area in which the UTOKEN is built. The first byte of storage at the address specified is the token length field. The second byte must contain the format version of the token. It is followed by a 78-byte area in which to build the UTOKEN. The mapping of the area is a 1-byte length field, followed by a 1-byte version code, followed by the rest of the token information.

For a description of the fields TOKNOUT uses from STOKEN, see the STOKEN description.

,TRUSTED=YES

,TRUSTED=NO
specifies whether the unit of work is a member of the trusted computer base. Subsequent RACROUTE REQUEST=AUTH requests using a token with this attribute have the following effects:

- Authorization checking is bypassed (this includes bypassing the checks for security classification on users and data).
- No statistics are updated.
- No audit records are generated, except those requested using the SETROPTS LOGOPTIONS command.

This is similar to having the started-procedures-table trusted bit on.

,USERID=*userid addr*
specifies the user identification of the user who has entered the system. The address points to a 1-byte length field, followed by the user ID, which can be up to eight characters.

If the USERID= keyword is omitted, (*) is the default.

To prevent a protected user ID from being used to logon, RACROUTE REQUEST=VERIFYX processing checks for the protected user ID being specified, and fails for requests that have a password specified or expected. For additional information on RACROUTEs handling of protected user IDs, see the USERID parameter of RACROUTE REQUEST=VERIFY.

Note: Certificate authority certificates are associated with the user ID `irrcerta`, MULTIID certificate name filters are associated with the user ID `irrmulti`, and site certificates are associated with the user ID `irrsitec`. These user IDs cannot be used for any purpose other than anchoring certificate authority certificates, site certificates, or certificate name filters.

The `irrcerta`, `irrmulti`, and `irrsitec` user IDs are defined to RACF during IPL in a manner similar to the method used to define the user ID IBMUSER. Both of these user IDs are added in revoked status and are not connected to any groups, insuring that they cannot be used as valid user IDs. RACROUTE REQUEST=VERIFYXs performed for these user IDs fail due to the lack of connected groups.

,MF=S
specifies the standard form of the RACROUTE REQUEST=VERIFYX macro instruction.

Return codes and reason codes

When you execute the macro, space for the RACF return code and reason code is reserved in the first two words of the RACROUTE parameter list. You can access them using the ICHSAFP mapping macro, by loading the ICHSAFP pointer with the label that you specified on the list form of the macro. When control is returned, register 15 contains the SAF return code.

Note to Reader
All return and reason codes are shown in hexadecimal. Also, please note that SAF return code is presented as SAF RC and RACF return code is presented as RACF RC in the following section.

SAF RC	Meaning

00 RACROUTE REQUEST=VERIFYX has completed successfully.

RACF RC	Meaning
3C	Request completed successfully, but a VERIFYX condition occurred in SAF.

Reason Code	Meaning
20	TOKNOUT area specified was too large; on return, the length field contains the length used.
24	STOKEN area specified was too large.
30	TOKNIN area specified was too large.

04 The requested function could not be performed.

RACF RC	Meaning
00	No security decision could be made.

Reason Code	Meaning
00	The RACF router was not loaded; the request, resource, subsystem combination could not be found in the RACF ROUTER table; no successful exit processing.

20	RACF is not active.
3C	RACF is not installed.
58	RJE or NJE operator FACILITY class profile not found.

08 The requested function failed.

RACF RC	Meaning
00	Default ACEE or token-building error.

Reason Code	Meaning
00	SAF failed to set up a recovery environment.

04	The user profile is not defined to RACF.
08	The password is not authorized.
0C	The password has expired.
10	The new password is not valid.
14	The user is not defined to the group.
18	RACROUTE REQUEST=VERIFYX was failed by the installation exit routine.
1C	The user's access has been revoked.
24	The user's access to the specified group has been revoked.
28	OIDCARD parameter is required but not supplied.

2C OIDCARD parameter is not valid for specified user.

30 The user is not authorized to the port of entry.

34 The user is not authorized to use the application.

38 SECLABEL checking failed.

Reason Code	Meaning
04	MLACTIVE requires a security label; none was specified.
08	Indicates the user is not authorized to the security label.
0C	The system was in multilevel secure status, and the dominance check failed.
10	Neither the user's nor the submitter's security labels dominate. They are disjoint.

3C A VERIFYX error occurred in SAF.

Reason Code	Meaning
04	Old password required. Message IRR009I issued.
08	User ID required. Message IRR008I issued.
0C	Propagation checking could not complete. Failed to set up a recovery environment.

44 A default token is used as input token.

48 Indicates that an unprivileged user issued a RACROUTE REQUEST=VERIFYX in a tranquil state (MLQUIET).

4C NODES checking failed.

Reason Code	Meaning
00	Submitter's node is not allowed access to execution node.
04	NJE failure: UACC of NONE for USERID type of NODES profile.
08	NJE failure: UACC of NONE for GROUP type of NODES profile.
0C	NJE failure: UACC of NONE for SECLABEL type of NODES profile.
10	NJE failure: No local submit node specified.
14	NJE failure: Reverification of translated values failed.

50 Indicates that a surrogate submit attempt failed.

Reason Code	Meaning
04	Indicates the SURROGAT class was inactive.
08	Indicates the submitter is not permitted by the user's SURROGAT class profile.
0C	Indicates that the submitter is not authorized to the security label under which the job is to run.

54 Indicates that a JESJOBS check failed.

5C Indicates that an error occurred while retrieving data from the RACF database.

Reason Code	Meaning
0483yyyy	An error occurred while RACROUTE REQUEST=VERIFY was accessing the RACF data base. ″yyyy″ is the RACF manager return code associated with the abend that would have been issued.

64 Indicates that the CHECK subparameter of the RELEASE keyword was specified on the execute form of the RACROUTE REQUEST=VERIFYX macro; however, the list form of the macro does not have the same release parameter. Macro processing terminates.

Example 1

Operation: The following example shows a RACROUTE REQUEST=VERIFYX coded for handling verification checking for a batch job that has been submitted with a USERID, GROUPID, SECLABEL, and PASSWORD. The UTOKEN area is filled with the verified job information.

```
   RACROUTE REQUEST=VERIFYX,SESSION=INTBATCH,          X
            PASSWRD=PASSWORD,TOKNOUT=TOKOUT,           X
            EXENODE=EXNOD,USERID=USER,                 X
            GROUP=GROUPID,SECLABL=SLBL,                X
            STOKEN=STOK,TRUSTED=NO,WORKA=RACWK,        X
            RELEASE=1.9
  .
  .
PASSWORD  DS  0CL9
PASSWL    DS  FL1'5'
PASSWT    DS  CL8'PWD01'

TOKOUT    DS  0CL80
TKOLEN    DS  XL1'50'   /* LENGTH - 80 DEC */
TKOVRS    DS  XL1'01'   /* VERSION 1       */
TKODATA   DS  CL78

EXNOD     DS  0CL9
EXNODL    DS  FL1'2'
EXNODT    DS  CL8'N1'

USER      DS  0CL9
USERL     DS  FL1'6'
```

```
USERT     DS  CL8'USER01'

GROUPID   DS  0CL9
GROUPIDL  DS  FL1'4'
GROUPIDT  DS  CL8'SYS1'

SLBL      DS  CL8'SYSLOW'

STOK      DS  CL80          /* OBTAINED BY PREVIOUS RACROUTE CALL */
RACWK     DS  CL512
```

Note: Additional keywords required by RACF to complete the request, such as WORKA, are specified on RACROUTE itself.

RACROUTE REQUEST=VERIFYX (list form)

The list form of the RACROUTE REQUEST=VERIFYX macro is written as follows. Refer to the Standard Form of the RACROUTE REQUEST=VERIFYX macro to determine additional parameters that are required by the time the RACROUTE service is invoked using the Execute form of the macro.

name	*name*: Symbol. Begin *name* in column 1.
ƀ	One or more blanks must precede RACROUTE.
RACROUTE	
ƀ	One or more blanks must follow RACROUTE.
REQUEST=VERIFYX	
,ACTINFO=*account addr*	*account addr*: A-type address
,APPL=*'applname'* ,APPL=*applname addr*	*applname*: 1-8 character name *applname addr*: A-type address
,ENCRYPT=YES ,ENCRYPT=NO	**Default:** ENCRYPT=YES
,ERROROPT=ABEND ,ERROROPT=NOABEND	**Default:** ERROROPT=ABEND
,EXENODE=*execution node addr*	*execution node addr*: A-type address
,GROUP=*group addr*	*group addr*: A-type address
,INSTLN=*parm list addr*	*parm list addr*: A-type address
,JOBNAME=*jobname addr*	*jobname addr*: A-type address
,LOG=ASIS	**Default:** LOG=ASIS

,LOG=ALL	
,LOGSTR=*logstr addr*	*logstr addr*: A-type address
,OIDCARD=*oid addr*	*oid addr*: A-type address
,NEWPASS=*new password addr*	*new password addr*: A-type address
,PASSCHK=YES ,PASSCHK=NO	**Default:** PASSCHK=YES
,PASSWRD=*password addr*	*password addr*: A-type address
,PGMNAME=*programmer name addr*	*programmer name addr*: A-type address
,POE=*port of entry addr*	*port of entry addr*: A-type address
,POENET=*network name addr*	*network name addr*: A-type address or register (2) - (12)
,REMOTE=YES ,REMOTE=NO	**Default:** REMOTE=NO
,SECLABL=*seclabel addr*	*seclabel addr*: A-type address
,SESSION=*type*	*type*: Any valid session type **Default:** SESSION=TSO
,SGROUP=*submitting group addr*	*submitting group addr*: A-type address
,SMC=YES ,SMC=NO	**Default:** SMC=YES
,SNODE=*submitting node addr*	*submitting node addr*: A-type address
,START=*procname addr*	*procname addr*: A-type address
,STAT=ASIS ,STAT=NO	**Default:** STAT=ASIS
,STOKEN=*stoken addr*	*stoken addr*: A-type address
,SUSERID=*submitting userid addr*	*submitting userid addr*: A-type address
,TERMID=*terminal addr*	*terminal addr*: A-type address
,TOKNIN=*utoken addr*	*utoken addr*: A-type address

,TOKNOUT=*utoken addr*	*utoken addr*: A-type address
,TRUSTED=YES ,TRUSTED=NO	**Default:** TRUSTED=NO
,USERID=*userid addr*	*userid addr*: A-type address
,MF=L	

The parameters are explained under the standard form of the RACROUTE REQUEST=VERIFYX macro instruction, with the following exception:

,MF=L
specifies the list form of the RACROUTE REQUEST=VERIFYX macro instruction.

RACROUTE REQUEST=VERIFYX (execute form)

The execute form of the RACROUTE REQUEST=VERIFYX macro is written as follows. Refer to the Standard Form of the RACROUTE REQUEST=VERIFYX macro to determine additional parameters that are required by the time the RACROUTE service is invoked using the Execute form of the macro.

name	*name*: Symbol. Begin *name* in column 1.
b	One or more blanks must precede RACROUTE.
RACROUTE	
b	One or more blanks must follow RACROUTE.
REQUEST=VERIFYX	
,RELEASE=*number* ,RELEASE=(*number*,CHECK)	*number*: See Standard Form
,ACTINFO=*account addr*	*account addr*: Rx-type address or register (2) - (12)
,APPL=*applname addr*	*applname addr*: Rx-type address or register (2) - (12)
,ENCRYPT=YES ,ENCRYPT=NO	
,ERROROPT=ABEND ,ERROROPT=NOABEND	**Default:** ERROROPT=ABEND
,EXENODE=*execution node addr*	*execution node addr*: Rx-type address or register (2) - (12)

,GROUP=*group addr*	*group addr*: Rx-type address or register (2) - (12)
,INSTLN=*parm list addr*	*parm list addr*: Rx-type address or register (2) - (12)
,JOBNAME=*jobname addr*	*jobname addr*: Rx-type address or register (2) - (12)
,LOG=ASIS ,LOG=ALL	
,LOGSTR=*logstr addr*	*logstr addr*: Rx-type address or register (2) - (12)
,NEWPASS=*new password addr*	*new password addr*: Rx-type address or register (2) - (12)
,OIDCARD=*oid addr*	*oid addr*: Rx-type address or register (2) - (12)
,PASSCHK=YES ,PASSCHK=NO	
,PASSWRD=*password addr*	*password addr*: Rx-type address or register (2) - (12)
,PGMNAME=*programmer name addr*	*programmer name addr*: Rx-type address or register (2) - (12)
,POE=*port of entry addr*	*port of entry addr*: Rx-type address or register (2) - (12)
,POENET=*network name addr*	*network name addr*: A-type address or register (2) - (12)
,REMOTE=YES ,REMOTE=NO	
,SECLABL=*seclabel addr*	*seclabel addr*: Rx-type address or register (2) - (12)
,SESSION=*type*	*type*: Any valid session type
,SGROUP=*submitting group addr*	*submitting group addr*: Rx-type address or register (2) - (12)
,SMC=YES ,SMC=NO	
,SNODE=*submitting node addr*	*submitting node addr*: Rx-type address or register (2) - (12)
,START=*procname addr*	*procname addr*: Rx-type address or register (2) - (12)
,STAT=ASIS ,STAT=NO	

,STOKEN=*stoken addr*	*stoken addr*: Rx-type address or register (2) - (12)
,SUSERID=*submitting userid addr*	*submitting userid addr*: Rx-type address or register (2) - (12)
,TERMID=*terminal addr*	*terminal addr*: Rx-type address or register (2) - (12)
,TOKNIN=*utoken addr*	*utoken addr*: Rx-type address or register (2) - (12)
,TOKNOUT=*utoken addr*	*utoken addr*: Rx-type address or register (2) - (12)
,TRUSTED=YES ,TRUSTED=NO	
,USERID=*userid addr*	*userid addr*: Rx-type address or register (2) - (12)
,MF=(E,*ctrl addr*)	*ctrl addr*: Rx-type address or register (1) or (2) - (12)

The parameters are explained under the standard form of the RACROUTE REQUEST=VERIFYX macro instruction, with the following exceptions:

,MF=(E,*ctrl addr***)**
specifies the execute form of the RACROUTE REQUEST=VERIFYX macro, using a remote, control-program parameter list.

,RELEASE=*number*
,RELEASE=(*number***,CHECK)**
specifies the RACF release level of the parameter list to be generated by this macro.

To use the parameters associated with a release, you must specify the release number of that release or a later release number. If you specify an earlier release level, the parameter is not accepted by macro processing, and an error message is issued at assembly time.

When you specify the RELEASE keyword, checking is done at assembly time. Execution-time validation of the compatibility between the list and execute forms of the RACROUTE REQUEST=VERIFYX macro can be done by your specifying the CHECK subparameter on the execute form of the macro.

When CHECK processing is requested, if the size of the list-form expansion is not large enough to accommodate all parameters defined by the RELEASE keyword on the execute form of the macro, the execute form of the macro is not done.

The release specified must be 1.9 or higher.

RACROUTE REQUEST=VERIFYX (modify form)

The modify form of the RACROUTE REQUEST=VERIFYX macro is written as follows. Refer to the Standard Form of the RACROUTE REQUEST=VERIFYX macro to determine additional parameters that are required by the time the RACROUTE service is invoked using the Execute form of the macro.

name	*name*: Symbol. Begin *name* in column 1.
b	One or more blanks must precede RACROUTE.
RACROUTE	
b	One or more blanks must follow RACROUTE.

REQUEST=VERIFYX

,ACTINFO=*account addr*	*account addr*: Rx-type address or register (2) - (12)
,APPL=*applname addr*	*applname addr*: Rx-type address or register (2) - (12)
,ENCRYPT=YES ,ENCRYPT=NO	
,ERROROPT=ABEND ,ERROROPT=NOABEND	**Default:** ERROROPT=ABEND
,EXENODE=*execution node addr*	*execution node addr*: Rx-type address or register (2) - (12)
,GROUP=*group addr*	*group addr*: Rx-type address or register (2) - (12)
,INSTLN=*parm list addr*	*parm list addr*: Rx-type address or register (2) - (12)
,JOBNAME=*jobname addr*	*jobname addr*: Rx-type address or register (2) - (12)
,LOG=ASIS ,LOG=ALL	
,LOGSTR=*logstr addr*	*logstr addr*: Rx-type address or register (2) - (12)
,NEWPASS=*new password addr*	*new password addr*: Rx-type address or register (2) - (12)
,OIDCARD=*oid addr*	*oid addr*: Rx-type address or register (2) - (12)
,PASSCHK=YES ,PASSCHK=NO	
,PASSWRD=*password addr*	*password addr*: Rx-type address or register (2) - (12)
,PGMNAME=*programmer*	*programmer name addr*: Rx-type address or register (2) - (12)

name addr	
,POE=*port of entry addr*	*port of entry addr*: Rx-type address or register (2) - (12)
,POENET=*network name addr*	*network name addr*: A-type address or register (2) - (12)
,REMOTE=YES ,REMOTE=NO	
,SECLABL=*seclabel addr*	*seclabel addr*: Rx-type address or register (2) - (12)
,SESSION=*type*	*type*: Any valid session type
,SGROUP=*submitting group addr*	*submitting group addr*: Rx-type address or register (2) - (12)
,SMC=YES ,SMC=NO	
,SNODE=*submitting node addr*	*submitting node addr*: Rx-type address or register (2) - (12)
,START=*procname addr*	*procname addr*: Rx-type address or register (2) - (12)
,STAT=ASIS ,STAT=NO	
,STOKEN=*stoken addr*	*stoken addr*: Rx-type address or register (2) - (12)
,SUSERID=*submitting userid addr*	*submitting userid addr*: Rx-type address or register (2) - (12)
,TERMID=*terminal addr*	*terminal addr*: Rx-type address or register (2) - (12)
,TOKNIN=*utoken addr*	*utoken addr*: Rx-type address or register (2) - (12)
,TOKNOUT=*utoken addr*	*utoken addr*: Rx-type address or register (2) - (12)
,TRUSTED=YES ,TRUSTED=NO	
,USERID=*userid addr*	*userid addr*: Rx-type address or register (2) - (12)
,MF=(M,*ctrl addr*)	*ctrl addr*: Rx-type address or register (1) or (2) - (12)

The parameters are explained under the standard form of the RACROUTE REQUEST=VERIFYX macro instruction, with the following exception:

,MF=(M,*ctrl addr***)**
specifies the modify form of the RACROUTE REQUEST=VERIFYX macro, using a remote, control-program parameter list.

Appendix A. Independent RACF system macros

This appendix contains independent RACF system macros that can be used by other callers to invoke RACF or another external security product.

Attention: As of RACF 1.9, new keywords are not supported on the independent invocation of these macros. RACF supports the new keywords only if you invoke the RACF system macros, which provide more function, using the RACROUTE interface documented in Chapter 2, “RACF system macros” on page 7.

Table 14 identifies the RACROUTE macro request types that are replacements for the independent system macros described in this appendix. If you receive a return code or reason code from an independent system macro and cannot find a description of the code in this appendix, refer to the counterpart request type in RACROUTE.

Table 14. Cross-reference for RACROUTE REQUEST=type and the Independent RACF System Macros

RACROUTE REQUEST Type	Independent RACF System Macro
REQUEST=AUTH	RACHECK
REQUEST=DEFINE	RACDEF
REQUEST=EXTRACT	RACXTRT
REQUEST=FASTAUTH	FRACHECK
REQUEST=LIST	RACLIST
REQUEST=STAT	RACSTAT
REQUEST=VERIFY	RACINIT

The following list provides a brief description of the independent RACF system macros.

FRACHECK Used to provide authorization checking when a user requests access to a RACF-protected resource, similar to RACHECK. However, FRACHECK verifies access to only those resources that have RACF profiles brought into main storage by the RACLIST macro service.

RACDEF Used to define, modify, or delete resource profiles for RACF.

RACHECK Used to provide authorization checking when a user requests access to a RACF-protected resource.

RACINIT Used to provide RACF user identification and verification.

RACLIST Used to retrieve general-resource profiles and build an in-storage list for faster authorization checking. The list is attached to the ACEE.

RACROUTE A limited-function RACROUTE used to invoke the system authorization facility (SAF) router.

RACSTAT Used to determine whether RACF is active, and, optionally, to determine whether RACF protection is in effect for a given resource class. The RACSTAT macro can also be used to determine whether a resource-class name is defined to RACF.

RACXTRT Used to retrieve or update specified resource-profile fields, or to encode data.

© Copyright IBM Corp. 1994, 2002

The user receives the RACF system macros as part of the MVS product, not as part of the RACF product; the MVS installation receives these macros even if it does not intend to install RACF.

FRACHECK macro

The FRACHECK macro is used to check a user's authorization for access to a resource. FRACHECK verifies access to those resources whose RACF profiles have been brought into main storage by the RACLIST facility. FRACHECK is a branch-entered service that does not save registers upon entry. Registers 0–5, 14, and 15 are used by the FRACHECK macro instruction and are not restored. Registers 6–13 are not altered by FRACHECK.

Notes:

1. Profile names containing "RACFVARS", double asterisks, or internal asterisks should not be defined in classes that use this macro for authorization. Results are unpredictable.
2. SECLABEL class processing is not done for FRACHECK

Attention: The FRACHECK macro executes in the addressing mode of the caller. Therefore, to access profiles that reside above 16MB, the program that issues FRACHECK must be running in 31-bit addressing mode when it issues FRACHECK.

FRACHECK (standard form)

The standard form of the FRACHECK macro instruction is written as follows:

name	*name*: Symbol. Begin *name* in column 1.
b	One or more blanks must precede FRACHECK.
FRACHECK	
b	One or more blanks must follow FRACHECK.
ENTITY=*entity addr*	*entity addr*: A-type address or register (2) - (12)
,CLASS=*'class name'*	*class name*: 1–8 character class name
,CLASS=*class name addr*	*class name addr*: A-type address or register (2) - (12)
,ATTR=READ	
,ATTR=UPDATE	**Default:** ATTR=READ
,ATTR=CONTROL	
,ATTR=ALTER	
,ATTR=*reg*	*reg*: Registers (2) - (12)
,ACEE=*acee addr*	*acee addr*: A-type address or register (2) - (12)
,WKAREA=*area addr*	*area addr*: A-type address or register (2) - (12)

,APPL=*'applname'*	*applname*: 1–8 character name
,APPL=*applname addr*	*applname addr*: A-type address or register (2) - (12)
,INSTLN=*parm list addr*	*parm list addr*: A-type address or register (2) - (12)

The parameters are explained as follows:

ENTITY=*entity addr*
specifies that RACF authorization checking is to be performed for the resource whose name is pointed to by the specified address. The resource name is a 6-byte volume serial number for CLASS='DASDVOL' or CLASS='TAPEVOL'. The name must be left-justified and padded with blanks. The length of all other resource names is determined from the class descriptor tables.

,CLASS='*class name***'**
,CLASS=*class name addr*
specifies that RACF authorization checking is to be performed for a resource of the specified class. If an address is specified, the address must point to an 8-byte field containing the class name.

,ATTR=READ
,ATTR=UPDATE
,ATTR=CONTROL
,ATTR=ALTER
,ATTR=*reg*
specifies the access authority required by the user or group accessing the resource:
READ: RACF user or group can open the resource only to read.
UPDATE: RACF user or group can open the resource to read or write.
CONTROL: For MVS/VSAM data sets, RACF user or group has authority equivalent to the VSAM control password. For non-VSAM data sets and other resources, RACF user or group has UPDATE authority.
ALTER: RACF user or group has total control over the resource.

If a register is specified, the register must contain one of the following codes in the low-order byte of the register:
X'02' READ
X'04' UPDATE
X'08' CONTROL
X'80' ALTER.

,ACEE=*acee addr*
specifies the address of the ACEE to be used to check authorization and to locate the in-storage profiles (RACLIST output) for the specified classes. If an ACEE is specified, it is used for authorization checking. If the specified ACEE has an in-storage profile list for the specified class, it is used to locate the resource. If an ACEE is not specified or if there is no in-storage profile list for the specified class in the ACEE, RACF uses the TASK ACEE (TCBSENV) pointer in the extended TCB. Otherwise, or if the TASK ACEE pointer is zero, RACF uses the main ACEE for the address space to obtain the list of the in-storage profiles. The main ACEE is pointed to by the ASXBSENV field of the address-space extension block.

,WKAREA=*area addr*
specifies the address of a 16-word work area to be used by FRACHECK. It contains the following information:
Word 12 contains the reason code that RACF passes back to the FRACHECK caller in register 0.
Word 13 contains the return code that FRACHECK passes back to the caller in register 15.
Word 14 contains the address of the in-storage profile used to determine authorization, or zero if no profile is found. If the profile was found, the profile address is passed back to the caller in register 1.
Word 15 contains a value provided by a preprocessing installation exit, or zero if there is no preprocessing exit.

,APPL=*'applname'*
,APPL=*applname addr*
specifies the name of the application requesting the authorization checking. This information is not used for the authorization-checking process, but is made available to the installation exit or exits. If an address is specified, it should point to an 8-byte area containing the application name, left-justified and padded with blanks if necessary.

,INSTLN=*parm list addr*
specifies the address of an area that contains information for the FRACHECK installation exit. This address is passed to the exit routine when the exit is given control. The INSTLN parameter is used by application or installation programs to pass information to the FRACHECK installation exit.

Parameters for RELEASE=1.6 through 1.8.1

The following parameters are valid for RELEASE=1.6, RELEASE=1.7, RELEASE=1.8, and RELEASE=1.8.1. RELEASE=1.6 is the default.

- ACEE=
- APPL=
- ATTR=
- CLASS=
- ENTITY=
- INSTLN=
- RELEASE=
- WKAREA=

Return codes and reason codes

For FRACHECK, if the return codes and reason codes you are receiving are not discussed in the description of this macro, refer to the return codes and reason codes described with RACROUTE REQUEST=FASTAUTH "Return codes and reason codes" on page 144.

When control is returned, register 15 contains one of the following return codes, and register 0 can contain a reason code:

Hex Code	Meaning	
00	The user or group is authorized to use the resource.	
	Reason Code	**Meaning**
	0	The FRACHECK return code indicates whether the caller is authorized to access the resource, but the access attempt is not within the scope of the audit or global audit specification.

	4	The FRACHECK return code indicates whether the caller is authorized to access the resource, but the access attempt is within the scope of the audit or global audit specification. The FRACHECK caller should log the attempt by issuing a RACHECK for the resource that the caller is attempting to access.

04 The resource or class name is not defined to RACF.

08 The user or group is not authorized to use the resource.

Reason Code	Meaning
0	The FRACHECK return code indicates whether the caller is authorized to access the resource, but the access attempt is not within the scope of the audit or global audit specification.
4	The FRACHECK return code indicates whether the caller is authorized to access the resource, but the access attempt is within the scope of the audit or global audit specification. The FRACHECK caller should log the attempt by issuing a RACHECK for the resource that the caller is attempting to access.

0C RACF is not active.

10 FRACHECK installation-exit error occurred.

14 RACF is not installed or an insufficient level of RACF is installed.

18 Indicates the profile has a conditional access list, the port-of-entry field in the security token is blank-filled, and the port-of-entry class is active.

64 Indicates that the CHECK subparameter of the RELEASE keyword was specified on the execute form of the FRACHECK macro; however, the list form of the macro does not have the proper RELEASE parameter. Macro processing terminates.

FRACHECK (list form)

The list form of the FRACHECK macro instruction is written as follows:

name	*name*: Symbol. Begin *name* in column 1.
b	One or more blanks must precede FRACHECK.
FRACHECK	
b	One or more blanks must follow FRACHECK.
ENTITY=*entity addr*	*entity addr*: A-type address.
,CLASS=*'class name'*	*class name*: 1–8 character class name

,CLASS=*class name addr*	*class name addr*: A-type address.
,ATTR=READ	**Default:** ATTR=READ
,ATTR=UPDATE	
,ATTR=CONTROL	
,ATTR=ALTER	
,ACEE=*acee addr*	*acee addr*: A-type address.
,WKAREA=*area addr*	*area addr*: A-type address.
,APPL=*'applname'*	*applname*: 1–8 character name
,APPL=*applname addr*	*applname addr*: A-type address.
,INSTLN=*parm list addr*	*parm list addr*: A-type address.
,MF=L	

The parameters are explained under the standard form of the FRACHECK macro instruction with the following exception:

,MF=L
specifies the list form of the FRACHECK macro instruction.

FRACHECK (execute form)

The execute form of the FRACHECK macro instruction is written as follows:

name	*name*: Symbol. Begin *name* in column 1.
b	One or more blanks must precede FRACHECK.
FRACHECK	
b	One or more blanks must follow FRACHECK.
ENTITY=*entity addr*	*entity addr*: Rx-type address or register (2) - (12)
,CLASS=*class name addr*	*class name addr*: Rx-type address or register (2) - (12)
,ATTR=*reg*	*reg*: Register (2) - (12)
,ACEE=*acee addr*	*acee addr*: Rx-type address or register (2) - (12)
,WKAREA=*area addr*	*area addr*: Rx-type address or register (2) - (12)
,APPL=*applname addr*	*applname addr*: Rx-type address or register (2) - (12)
,INSTLN=*parm list addr*	*parm list addr*: Rx-type address or register (2) - (12)
,RELEASE=*number*	*number*: 1.8.1, 1.8, 1.7, or 1.6
,RELEASE=(,CHECK)	**Default:** RELEASE=1.6
,RELEASE=	
*(number,*CHECK)	
,MF=(E,*ctrl addr*)	*ctrl addr*: Rx-type address or register (1) - (12)

The parameters are explained under the standard form of the FRACHECK macro instruction with the following exceptions:

,MF=(E,*ctrl addr***)**
specifies the execute form of the FRACHECK macro instruction, using a remote, control-program parameter list.

,RELEASE=*number*
,RELEASE=(,CHECK)
,RELEASE=(*number***,CHECK)**
specifies the RACF release level of the parameter list to be generated by the macro.

To use the parameters associated with a release, you must specify the number of that release or a later release number. If you specify an earlier release level, the parameter is not accepted by macro processing, and an error message is issued at assembly time. For the parameters that are valid for RELEASE=1.6 and later, see “Parameters for RELEASE=1.6 through 1.8.1” on page 268.

When you specify the RELEASE keyword, checking is done at assembly time. Compatibility between the list and execute forms of the FRACHECK macro are validated at execution time if you specify the CHECK subparameter on the execute form of the macro.

The size of the list form expansion must be large enough to accommodate all parameters defined by the RELEASE keyword on the execute form of the macro. Otherwise, when CHECK processing is requested, the execute form of the macro is not done, and a return code of X'64' is returned.

RACDEF: Define a resource to RACF

The RACDEF macro is used to define, modify, or delete resource profiles for RACF. It can also be used for special cases of authorization checking. RACF uses the resulting profiles to perform RACHECK authorization checking. The RACDEF caller must be authorized (APF-authorized, in system key 0–7, or in supervisor state).

A RACF user can change or add the RACDEF parameters, OWNER, LEVEL, UACC, or AUDIT by means of the RACDEF preprocessing and postprocessing exit routines.

Note: Only callers in 24-bit addressing mode can issue this macro. Callers executing in 31-bit addressing mode, who want to use the RACDEF function, can code the RACROUTE macro.

When activated, automatic direction of application updates propagates RACDEF requests that update the RACF database on to selected remote nodes.

Not all RACDEF requests update the RACF database. The ENVIR=VERIFY keyword specifies that no profile is to be created, but that the user’s authority is to be checked. Automatic direction of application updates does not propagate a RACDEF if ENVIR=VERIFY is specified. Similarly, many RACDEF requests are issued with RACFIND=NO to check if a user is authorized to create a data set or catalog a data set based on a generic profile. RACDEF RACFIND=NO requests for DASD data sets are not propagated. RACDEF requests for tape data sets are propagated even when RACFIND=NO is specified because even though no data set profile is updated, an update might be made to the TVTOC in a TAPEVOL profile.

Only RACDEF requests with return code 0 are propagated.

RACDEF (standard form)

The standard form of the RACDEF macro is written as follows:

name	*name*: Symbol. Begin *name* in column 1.
b	One or more blanks must precede RACDEF.
RACDEF	
b	One or more blanks must follow RACDEF.
ENTITY=*profile name addr*	*profile name addr*: A-type address, or register (2) - (12)
,VOLSER=*vol addr*	*vol addr*: A-type address, or register (2) - (12) **Note:** VOLSER is required only for CLASS='DATASET' and DSTYPE not equal to M when a discrete profile name is used.
,TYPE=DEFINE	
,TYPE=DEFINE, NEWNAME= *new dsn addr*	*new dsn addr*: A-type address, or register (2) - (12)
,TYPE=ADDVOL, OLDVOL= *old vol addr*	*old vol addr*: A-type address, or register (2) - (12)
,TYPE=CHGVOL, OLDVOL= *old vol addr*	
,TYPE=DELETE	**Default:** TYPE=DEFINE
,DDNAME=*'ddname'* ,DDNAME=*ddname addr*	*ddname*: 1–8 character name *ddname addr*: A-type address or register (2) - (12) **Note:** DDNAME is valid for OPEN/CLOSE routine.
,DSTYPE=V ,DSTYPE=V ,DSTYPE=M ,DSTYPE=T	**Default:** DSTYPE=N
,INSTLN=*parm list addr*	*parm list addr*: A-type address, or register (2) - (12)
,CLASS=*'class name'* ,CLASS=*class name addr*	*class name*: 1–8 character class name *class name addr*: A-type address, or register (2) - (12) **Default:** CLASS='DATASET'
,MENTITY=*entity addr*	*entity addr*: A-type address, or register (2) - (12)
,MCLASS=*'class name'*	*class name*: 1–8 character class name

,MCLASS=*class name addr*	*class name addr*: A-type address, or register (2) - (12) **Default:** MCLASS='DATASET'
,MVOLSER=*volser addr*	*volser addr*: A-type address, or register (2) - (12)
,MGENER=ASIS ,MGENER=YES	**Default:** MGENER=ASIS
,ACEE=*acee addr*	*acee addr*: A-type address, or register (2) - (12)
,UNIT=*unit addr*	*unit addr*: A-type address, or register (2) - (12)
,OWNER=*owner id addr*	*owner id addr*: A-type address, or register (2) - (12)
,LEVEL=*number* ,LEVEL=*reg*	**Default:** zero. *reg*: Register (2) - (12)
,UACC=ALTER ,UACC=CONTROL ,UACC=UPDATE ,UACC=READ	
,UACC=EXECUTE ,UACC=NONE ,UACC=*reg*	 *reg*: Register (2) - (12)
,DATA=*data addr*	*data addr*: A-type address or register (2) - (12)
,AUDIT=NONE ,AUDIT=*audit value* ,AUDIT=(*audit value (access level), audit value (access level),...)*	**Note:** AUDIT is valid only if TYPE=DEFINE is specified. *audit value*: ALL, SUCCESS, or FAILURES *access level*: READ, UPDATE, CONTROL, or ALTER **Default:** READ
,AUDIT=*(reg)*	*reg*: Register (2) - (12)
,RACFIND=YES ,RACFIND=NO	
,CHKAUTH=YES ,CHKAUTH=NO	**Default:** CHKAUTH=NO
,GENERIC=YES ,GENERIC=ASIS	**Default:** GENERIC=ASIS
,WARNING=YES ,WARNING=NO	**Default:** WARNING=NO **Note:** WARNING is valid only if TYPE=DEFINE is specified.

,FILESEQ=*reg* ,FILESEQ=*number*	*reg*: Register (2) - (12) *number*: 1–9999
,EXPDT=*expir-date addr*	*expir-date addr*: A-type address or register (2) - (12)
,EXPDTX= *extended-expir-date addr*	*extended-expir-date addr*: A-type address or register (2) - (12)
,RETPD=*retn-period addr*	*retn-period addr*: A-type address or register (2) - (12) **Default:** See description of parameter.
,ACCLVL=*(access value addr)*	*access value addr*: A-type address or register (2) - (12)
,ACCLVL=*(access value addr)*	*access value addr*: A-type address or register (2) - (12)
,ACCLVL=(*access value addr,parm list addr)*	*parm list addr*: A-type address, or register (2) - (12)
,TAPELBL=STD ,TAPELBL=BLP ,TAPELBL=NL	**Default:** TAPELBL=STD
,SECLVL=*addr*	*addr*: A-type address, or register (2) - (12)
,ERASE=YES ,ERASE=NO	**Default:** ERASE=NO
,NOTIFY=*notify-id addr*	*notify-id addr*: A-type address or register (2) - (12)
,ENVIR=VERIFY	Specifies that only verification is to be done. **Default:** Normal RACDEF processing.
,RESOWN=*resource owner addr*	A-type address, or register (2) - (12)
,STORCLA=*storage class addr*	A-type address, or register (2) - (12)
,MGMTCLA=*management type addr*	A-type address, or register (2) - (12)

The parameters are explained as follows:

ENTITY=*profile name addr*
specifies the address of the name of the discrete or generic profile that is to be defined to, modified, or deleted from RACF. The profile name is a 44-byte DASD data set name for CLASS=‘DATASET’ or a 6-byte volume-serial name for CLASS=‘DASDVOL’ or CLASS=‘TAPEVOL’. The lengths of all other profile names are determined by the class descriptor table. The name must be left-justified in the field and padded with blanks.

,VOLSER=*vol addr*

specifies the address of the volume-serial number:

- For TYPE=ADDVOL, of the new volume to be added to the definition of the data set.
- For TYPE=ADDVOL and CLASS='TAPEVOL', of the new volume being added to the tape-volume set identified by ENTITY.
- For TYPE=DEFINE and CLASS='DATASET', of the catalog (for a VSAM data set), or of the volume on which the data set resides (for a non-VSAM data set).

The volume serial number is optional if DSTYPE=M is specified; it is ignored if the profile name is generic.

The field pointed to by the specified address contains the volume serial number (padded to the right with blanks, if necessary, to make six characters).

,TYPE=DEFINE
,TYPE=DEFINE,NEWNAME=*new dsn addr*
,TYPE=ADDVOL,OLDVOL=*old vol addr*
,TYPE=CHGVOL,OLDVOL=*old vol addr*
,TYPE=DELETE

specifies the type of action to be taken:

Note: If SETROPTS ADDCREATOR is in effect when a new DATASET or general resource profile is defined, the profile creator's user ID is placed on the profile access list with ALTER authority.

If SETROPTS NOADDCREATOR is in effect when:

- a new generic profile is defined, the profile creator's user ID is not placed on the profile's access list. If you use profile modeling when defining a generic profile, RACF copies the access list exactly. If the creator's user ID appeared in the model's access list, the same authority is copied to the new profile.
- a new discrete DATASET or TAPEVOL profile is defined, the profile creator's user ID is placed on the profile's access list with ALTER authority. If you use profile modeling when defining one these profiles, if the creator's user ID appeared in the model's access list, the authority is created in the new profile with ALTER authority.
- any other new discrete profile is defined, the profiles creator's user ID is not placed on the access list. If you use profile modeling when defining one of these profiles, RACF copies the access list exactly. If the creator's user ID appeared in the model's access list, the same authority is copied to the new profile.

- TYPE=DEFINE. The definition of the resource is added to the RACF data set, and the current user is established as the owner of the defined entity.
- TYPE=DEFINE,NEWNAME=. If NEWNAME is specified, the address points to a 44-byte field containing the new name for the data set that is to be renamed. NEWNAME is valid only with CLASS=DATASET. NEWNAME is not valid with DSTYPE=T.
- TYPE=ADDVOL. The new volume is added to the definition of the specified resource. For the DATASET class, the OLDVOL address specifies a previous volume of a multivolume data set. For the TAPEVOL class, the ENTITY address specifies a previous volume of a tape volume set. This parameter applies only to discrete profiles.

- TYPE=CHGVOL. The volume serial number in the definition of the specified resource is changed from the old volume serial number identified in OLDVOL to the new volume serial number identified in the VOLSER parameter. This parameter applies only to discrete profiles. TYPE=CHGVOL is not valid with DSTYPE=T.
- TYPE=DELETE. The definition of the resource is removed from the RACF data set. (For a multivolume data set or a tape volume set, only the specified volume is removed from the definition.)

  If DSTYPE=T is specified, the data sets must be deleted in the reverse order they were created. For example, if file1 has dataset1, files2 has dataset2, and file3 has dataset3, you must do the RACDEF TYPE=DELETE,DSTYPE=T for file3, file2, and file1, in that order.

,DDNAME=*'ddname'*
,DDNAME=*ddname addr*
specifies the ddname associated with the data set name that is specified as the ENTITY or ENTITYX name.

This keyword is intended for use only by OPEN processing.

,DSTYPE=N
,DSTYPE=V
,DSTYPE=M
,DSTYPE=T
specifies the type of data set associated with the request:
- N for non-VSAM
- V for VSAM
- M for model profile
- T for tape.

DSTYPE=T should not be specified unless the SETROPTS TAPEDSN option is active (RCVTTDSN bit is on); otherwise, the processing is the same as for RACDEF CLASS='TAPEVOL'.

Specify DSTYPE only for CLASS='DATASET'.

,INSTLN=*parm list addr*
specifies the address of an area that is to contain parameter information meaningful to the RACDEF installation exit routines. This information is passed to the installation exit routines when they are given control from the RACDEF routine.

The INSTLN parameter can be used by an application program acting as a resource manager that needs to pass information to the RACDEF installation exit routines.

,CLASS=*'class name'*
,CLASS=*class name addr*
specifies that a profile is to be defined, modified, or deleted in the specified class. If an address is specified, the address must point to a 1-byte length field followed by the class name (for example, DATASET or TAPEVOL). The class name should be no longer than eight characters.

,MENTITY=*entity addr*
specifies the address of the name of the discrete or generic profile that is to be used as a model in defining the ENTITY profile. The profile can belong to any class, as specified by the MCLASS parameter, and can be either a discrete or a generic profile. MENTITY can be specified with TYPE=DEFINE but not with

TYPE=DEFINE,NEWNAME=*new dsn addr*. The name is contained in a 44-byte field pointed to by the specified address. The name is left-justified in the field and padded with blanks.

,MCLASS=*'class name'*
,MCLASS=*class name addr*
specifies the class to which the profile defined by MENTITY= belongs. If an address is specified, the address must point to a 1-byte length field followed by the class name. The class name should be no longer than eight characters. The default is MCLASS='DATASET'.

,MVOLSER=*volser addr*
specifies the address of the volume serial number of the volume associated with the profile in the ENTITY operand. The field pointed to by the specified address contains the volume serial number, padded to the right with blanks if necessary to make six characters.

If you specify MENTITY and CLASS='DATASET', you must specify MVOLSER with the name of the volume serial number or with blanks.

If you specify it with blanks, the discrete MENTITY data set profile name must be unique, meaning it has no duplicates on the database. In this case, RACF determines the correct MVOLSER.

,MGENER=ASIS
,MGENER=YES
specifies whether the profile name defined by MENTITY is to be treated as a generic name.

- If MGENER=ASIS is specified, the profile name is considered a generic only if it contains a generic character: an asterisk (*) or a percent sign (%).
- If MGENER=YES is specified, the profile name is considered a generic, even if it does not contain a generic character: an asterisk (*) or a percent sign (%).

MGENER is ignored if the GENCMD option on the RACF SETROPTS command is not specified for the class. (See *z/OS Security Server RACF Command Language Reference*.)

,ACEE=*acee addr*
specifies the address of the ACEE to be used during RACDEF processing.

If no ACEE is specified, RACF uses the TASK ACEE pointer (TCBSENV) in the extended TCB. If the TASK ACEE pointer is zero, RACF uses the main ACEE. The main ACEE's address is in the ASXBSENV field in the address space extension block.

,UNIT=*unit addr*
specifies the address of a field containing unit information. If a unit address is specified, the unit information in the data set profile is replaced by the unit information pointed to by this unit address. The unit address must point to a field containing a 1-byte length field (whose value can range from 4 through 8) followed by the actual unit information. If the value in the length field is 4, the unit information is assumed to contain a copy of the information in the UCBTYP field of the UCB. Otherwise the unit information is assumed to be in the generic form (for example, 3330-1).

UNIT is valid if TYPE=CHGVOL or TYPE=DEFINE is specified. It is ignored for generic names.

,OWNER =*owner id addr*
specifies the address of a field containing the profile owner's ID. OWNER is valid if TYPE=DEFINE is specified. The owner's ID must be a valid (RACF-defined) user ID or group name. The address must point to an 8-byte field containing the owner's name, left-justified and padded with blanks.

,LEVEL=*number*
,LEVEL=*reg*
specifies a level value for the profile. LEVEL is valid only if TYPE=DEFINE is specified. The level number must be a valid decimal number in the range 0 to 99. If a register is specified, its low-order byte must contain the binary representation of the number.

Note: RACF does not check the validity of this number if it has been added or modified by the RACDEF preprocessing or postprocessing exit routines.

,UACC=ALTER
,UACC=CONTROL
,UACC=UPDATE
,UACC=READ
,UACC=EXECUTE
,UACC=NONE
,UACC=*reg*
specifies a universal-access authority for the profile. UACC is valid only if TYPE=DEFINE is specified. UACC must contain a valid access authority (EXECUTE, ALTER, CONTROL, UPDATE, READ, or NONE).

For EXECUTE to be effective, your MVS system must be running with DFP 3.1.0 or later installed. EXECUTE authority means that the user has **only** the ability to execute the program; the user cannot read the program. If your MVS system is not running with DFP 3.1.0 or later an EXECUTE UACC specification is treated as NONE.

If a register is specified, the low-order byte must contain one of the following valid access authorities:
X'80' ALTER
X'40' CONTROL
X'20' UPDATE
X'10' READ
X'01' NONE
X'08' EXECUTE.

Note: RACF does not check the validity of the universal-access authority if it has been added or modified by the RACDEF preprocessing or postprocessing exit routine.

,DATA=*data addr*
specifies the address of a field that contains up to 255 characters of installation-defined data to be placed in the profile. DATA is valid only if TYPE=DEFINE is specified. The data address must point to a field containing a 1-byte length field (whose value can range from 0 to 255) followed by the actual installation-defined data.

,AUDIT=NONE
,AUDIT=*audit value*
,AUDIT=*(audit value(access level),audit value(access level),...)*
,AUDIT=*(reg)*
specifies the types of accesses and the access levels that are to be logged to the SMF data set. AUDIT is valid only if TYPE=DEFINE is specified.

For *audit value*, specify one of the following: ALL, SUCCESS, or FAILURES. You can, optionally, specify an *access level* (access authority) following each audit value.

Access Levels:

- EXECUTE: This access level is not audited. If you specify FAILURES (READ), logs the READ attempt as a failure, but allows EXECUTE access to the data set.
- READ: The default access level value, logs access attempts at any level.
- UPDATE: Logs access attempts at the UPDATE, CONTROL, and ALTER levels.
- CONTROL: Logs access attempts at the CONTROL and ALTER levels.
- ALTER: Logs access attempts at the ALTER level only.

Note: For more information about specific audit values and access levels, see *z/OS Security Server RACF Command Language Reference*.

RACF resolves combinations of conflicting specifications by using the most encompassing specification. Thus, in the case of the following:

```
ALL(UPDATE),FAILURES(READ)
```

RACF assumes SUCCESS(UPDATE),FAILURES(READ).

For compatibility with previous releases, register notation can also be specified as AUDIT=*reg* if the register is not given the symbolic name ALL, SUCCESS, or FAILURES.

Logging is controlled separately for SUCCESS and FAILURES, and can also be suppressed or requested using the RACHECK postprocessing installation exit routine.

If a register is specified, its low-order byte must contain one of the following valid audit values:

Bit	Meaning
0	ALL
1	SUCCESS
2	FAILURES
3	NONE
4-5	Qualifier for SUCCESS
6-7	Qualifier for FAILURES

The qualifier codes are as follows:

00	READ
01	UPDATE
10	CONTROL
11	ALTER

Only one of bits 0 through 3 can be on. If ALL is specified, the two qualifier fields can be used to request different logging levels for successful and unsuccessful events.

,RACFIND=YES
,RACFIND=NO

specifies whether a discrete profile is involved in RACDEF processing. When TYPE=DEFINE is specified, RACFIND=YES means that a discrete profile is to be created. When TYPE=DELETE, DEFINE with NEWNAME, CHGVOL, or ADDVOL is specified, RACFIND=YES means that a discrete profile already exists.

RACFIND=NO means (when TYPE=DEFINE) that no discrete profile is to be created, but some authorization checking is required. For other types of action, no discrete profile should exist.

Notes:

1. Automatic direction of application updates does not propagate a RACDEF request for DASD data sets when the RACFIND=NO keyword is specified.
2. Automatic direction of application updates does not propagate a RACDEF request for tape data sets when the RACFIND=NO keyword is specified. Even though no DATASET class profile is updated, the TAPEVOL class profile is updated.

,CHKAUTH=YES
,CHKAUTH=NO

specifies whether or not RACF verifies that the user is authorized to perform the operation.

CHKAUTH=YES is valid when either TYPE=DEFINE,NEWNAME= or TYPE=DELETE is specified.

For DSTYPE=T, specifies that RACF verifies that the user is authorized to define a data set (TYPE=DEFINE), delete a data set (TYPE=DELETE), or add a volume (TYPE=ADDVOL).

,FILESEQ=*number*
,FILESEQ=*reg*

specifies the file sequence number of a tape data set on a tape-volume or within a tape-volume set. The number must be in the range 1 through 9999. If a register is specified, it must contain the file-sequence number in the low-order halfword. If CLASS=‘DATASET’ and DSTYPE=T are not specified, FILESEQ is ignored.

,EXPDT=*expir-date addr*
,RETPD=*retn-period addr*
,EXPDTX=*extended-expir-date addr*

specifies the address containing information about the data set’s expiration date or RACF security retention period.

EXPDT=*expir-date addr* specifies the address of a 3-byte field containing the data set’s expiration date. The date is given in packed decimal form as YYDDDF, where YY is the year and DDD is the day number. The year must be in the range 01 through 99, and the day number must be in the range 1 through 366. F allows the date to remain a positive integer when converted from packed decimal to hexadecimal. All fields are right-justified.

EXPDTX=*extended-expir-date addr* specifies the address of a 4-byte field that contains the address of the data set’s expiration date. The date is given in packed decimal form as CCYYDDDF, where CC is the century change greater than 19, YY is the year, and DDD is the day number. The year must be in the range 01 through 99. The day must be in the range 1 through 366. All fields are right-justified. When you want to represent 19 for the century, you must specify CC as 00; when you want to represent 20 for the century, you must specify CC

as 01. F allows the date to remain a positive integer when converted from packed decimal to hexadecimal. To use this parameter, you must also specify RELEASE=1.8.

RETPD=*retn-period addr* specifies the address of a two-byte binary field containing the number of days after which RACF protection for the data set expires. The value specified must be in the range 1 through 65533. To indicate that there is no expiration date, specify 65534.

If you do not specify any of these parameters, a default RACF security retention period is obtained from the RETPD keyword specified on an earlier RACF SETROPTS command.

These parameters are valid only if CLASS='DATASET' and DSTYPE=T.

,ACCLVL=*(access value addr)*
,ACCLVL=(*access value addr,parm list addr***)**
specifies the tape-label access-level information for the MVS tape-label functions. The address must point to a field containing a 1-byte length field (with a value that can range from 0 through 8) followed by an 8-character string that is passed to the RACDEF installation exit routines. The parameter-list address points to a parameter list containing additional information to be passed to the RACDEF installation exit routines.

RACF does not check or modify this information.

TAPELBL=STD|BLP|NL
specifies the type of tape label processing to be done:
- STD: IBM or ANSI standard labels
- BLP: Bypass label processing
- NL: Unlabeled tapes.

For TAPELBL=BLP, the user must have the requested authority to the profile ICHBLP in the general-resource class FACILITY. For TAPELBL=NL or BLP, the user is not allowed to protect volumes with volume serial numbers in the format L*nnnnn*.

The TAPELBL parameter is passed to the RACDEF installation exits.

This parameter is primarily intended for use by data-management routines to indicate the label type from the LABEL keyword on the JCL statement.

This parameter is valid only for CLASS='DATASET' and DSTYPE=T, or CLASS='TAPEVOL'.

,SECLVL=*addr*
specifies the address of a list of installation-defined security-level identifiers. Each identifier is a halfword, containing a value that corresponds to an installation-defined security-level name.

The identifiers must be in the range 1 through 254. Only one identifier can be passed in the list.

The list must start with a fullword containing the number of entries in the list (currently, only 0 or 1).

,ERASE=YES
,ERASE=NO
specifies whether the DASD data set, or the released space, is to be erased when it is deleted or part of its space is to be released for reuse.

- If ERASE=YES is specified, the data set is erased when it is deleted, or released for reuse.
- If ERASE=NO is specified, the data set is not be erased, deleted, or released.

Note: This parameter can be overridden by the RACF SETROPTS ERASE command.

The default is ERASE=NO.

Specify ERASE only for CLASS=DATASET.

Only programs that are APF-authorized, system key 0–7, or in supervisor state can use the ERASE keyword.

,NOTIFY=*notify-id addr*
specifies the address of an 8-byte area containing the user ID of the RACF-defined user who is to be notified when an unauthorized attempt to access the resource protected by this profile is detected.

,GENERIC=YES
,GENERIC=ASIS
specifies whether the resource name is treated as a generic profile name. If GENERIC is specified with CLASS=DEFINE, NEWNAME, GENERIC applies to both the old and new names. GENERIC is ignored if the GENCMD option on the RACF SETROPTS command is not specified for the class. (See *z/OS Security Server RACF Command Language Reference*.)

This keyword is designed primarily for use by RACF commands.

- If GENERIC=YES is specified, the resource name is considered a generic profile name, even if it does not contain a generic character: an asterisk (*) or a percent sign (%).
- If GENERIC=ASIS is specified, the resource name is considered a generic only if it contains a generic character: an asterisk (*) or a percent sign (%).

,WARNING=YES
,WARNING=NO
WARNING is valid only if TYPE=DEFINE is specified. If WARNING=YES is specified, access is granted to the resource and the event is logged as a warning if either the SUCCESS or FAILURES logging is requested.

,ENVIR=VERIFY
specifies that no profile is to be created, but that the user's authority to define or rename the resource or profile is to be checked, along with any other authorization processing that is necessary.

If you specify ENVIR, you must also specify RELEASE=1.8.1 or a later release number.

Notes:

1. If you do not specify ENVIR=VERIFY, normal RACDEF processing occurs.
2. Automatic direction of application updates does not propagate RACDEF request if ENVIR=VERIFY is specified.

,RESOWN=*resource owner address*
specifies the address of a field containing the resource owner's ID. If you specify RESOWN, you must also specify TYPE=DEFINE and the current RELEASE parameter. The resource owner's ID must be either a valid (RACF-defined) user ID or group name, or *NONE*. If the resource owner's ID

is specified as *NONE*, RACF performs third-party RACHECK, using USERID=*NONE*. The address must point to a 2-byte field followed by the resource owner's name.

,MGMTCLA=*management class address*
specifies the address of a management class to which the resource owner must have authority. The address must point to an 8-byte field that contains a management-class name preceded by a halfword length. If you specify MGMTCLA, you must also specify TYPE=DEFINE, RESOWN, and RELEASE=1.8.1 or a later release number.

When MGMTCLA is specified, RACDEF processing invokes RACHECK processing to verify that the RESOWNER is authorized to the management class.

,STORCLA=*storage class address*
specifies the address of the storage class to which the resource owner must have authority. The address must point to a 2-byte field followed by the storage class name. If you specify STORCLA, you must also specify TYPE=DEFINE, RESOWN, and RELEASE=1.8.1 or a later release number.

When specified, RACDEF processing invokes RACHECK processing to verify that the RESOWNER is authorized to the storage class.

Parameters for RELEASE=1.6 through 1.8.1

The RELEASE values for which a parameter is valid are marked with an 'X'. RELEASE=1.6 is the default.

Table 15. RACDEF Parameters for RELEASE= 1.6 through 1.8.1

Parameter	RELEASE=1.6	RELEASE=1.7	RELEASE=1.8 or 1.8.1
ACEE=	X	X	X
ACCLVL=		X	X
AUDIT=	X	X	X
CHKAUTH=	X	X	X
CLASS=	X	X	X
DATA=	X	X	X
DSTYPE=N, V, or M	X	X	X
DSTYPE=T		X	X
ENTITY=	X	X	X
ENVIR=			X
ERASE=		X	X
EXPDT=		X	X
EXPDTX=			X
FILESEQ=		X	X
GENERIC=	X	X	X
INSTLN=	X	X	X
LEVEL=	X	X	X
MCLASS=		X	X
MENTITY=	X	X	X
MGENER=		X	X

Table 15. RACDEF Parameters for RELEASE= 1.6 through 1.8.1 (continued)

Parameter	RELEASE=1.6	RELEASE=1.7	RELEASE=1.8 or 1.8.1
MGMTCLA=			X
MVOLSER=	X	X	X
NOTIFY=		X	X
RACFIND=	X	X	X
RELEASE=	X	X	X
RESOWN=			X
RETPD=		X	X
SECLVL=		X	X
STORCLA=			X
TAPELBL=		X	X
TYPE=	X	X	X
UACC=	X	X	X
UNIT=	X	X	X
VOLSER=	X	X	X
WARNING=	X	X	X

Return codes and reason codes

If the return codes and reason codes you are receiving are not discussed in this macro, refer to the return codes and reason codes described with RACROUTE REQUEST=DEFINE on page 76.

When control is returned, register 15 contains one of the following return codes, and register 0 can contain a reason code.

Hex Code **Meaning**

00 RACDEF has completed successfully. Register 0 contains one of the following reason codes:

Reason Code	Meaning
00	Indicates a normal completion.
04	Indicates RACFIND=NO was specified and no generic profile applying to the data set was found.

04 RACDEF has completed processing. Register 0 contains one of the following reason codes:

Reason Code	Meaning
00	Indicates the following: - For TYPE=DEFINE, the resource name was previously defined. - For TYPE=DEFINE,NEWNAME, the new resource name was previously defined. - For TYPE=DELETE, the resource name was not previously defined.

04 Indicates for TYPE=DEFINE that the data set name was previously defined on a different volume and that the option disallowing duplicate data sets was specified at IPL.

08 RACDEF has completed processing. Register 0 contains one of the following reason codes:

Reason Code	Meaning
00	Indicates the following: - For TYPE=DEFINE, the check for authority to allocate a data set or create a profile with the specified name has been failed. - For TYPE=DELETE or TYPE=DEFINE,NEWNAME if CHKAUTH=YES is specified, the authorization check has been failed. - For TYPE=ADDVOL,OLDVOL (or for TYPE=CHGVOL,OLDVOL) the old value was not defined.
04	Indicates for TYPE=DEFINE that no profile was found to protect the data set and that the RACF protect-all option is in effect.
08	Indicates TYPE=DEFINE (or TYPE=ADDVOL,OLDVOL or TYPE=CHGVOL,OLDVOL) and DSTYPE=T were specified, and the user is not authorized to define a data set on the specified volume.
0C	Indicates TYPE=DEFINE and DSTYPE=T were specified, and the user is not authorized to define a data set with the specified name.
10	Indicates DSTYPE=T or CLASS=TAPEVOL was specified, and the user is not authorized to specify LABEL=(,BLP).
20	Indicates the data set owner is not authorized to use the specified DFP storage class.
24	Indicates the data set owner is not authorized to use the specified DFP management class.

0C For TYPE=DEFINE,NEWNAME, the old data set name was not defined; or if the generation-data-group (GDG) modeling function is active, an attempt was made to rename a GDG name to a name that requires the creation of a new profile; or if generic profile checking is active, the old data set name was protected by a generic profile and there is no generic profile that protects the new data set name. This last case refers only to an attempt to rename an existing profile, which cannot be found.

10 For TYPE=DEFINE with MENTITY, the model resource was not defined.

64 Indicates that the CHECK subparameter of the RELEASE keyword was specified on the execute form of the RACDEF macro; however,

the list form of the macro does not have the proper RELEASE parameter. Macro processing terminates.

Example 1

Operation: Invoke RACF to define a discrete profile for a non-VSAM data set residing on the volume pointed to by register 8. Register 7 points to the data set name. All successful requests for update authority to the data set are to be audited, as well as all unsuccessful ones.

```
RACDEF  ENTITY=(R7),VOLSER=(R8),CLASS='DATASET',
        AUDIT=(SUCCESS(UPDATE),FAILURES),
        RACFIND=YES
```

Example 2

Operation: Use the standard form of the RACDEF macro to define a discrete data set profile for a non-VSAM DASD data set. The data set for which you are creating a profile is a non-VSAM DASD data set named DSNAME. It resides on a volume ID named VOLID. You want to create a discrete profile by specifying the RACFIND keyword. In addition, you want to notify the user called USERNAME of any access attempts that have been rejected because they exceed the UACC of READ that you are allowing.

```
RACDEF ENTITY=DSNAME,VOLSER=VOLID,CLASS='DATASET',UACC=READ,     X
       RACFIND=YES,NOTIFY=USERNAME,RELEASE=1.7
```

Example 3

Operation: Use the standard form of the macro to check the authority of a user to define a discrete data set profile for a non-VSAM DASD data set, but do not actually build the profile. The name of the data set is DSNAME.

```
RACDEF ENTITY=DSNAME,VOLSER=VOLID,CLASS='DATASET',RACFIND=NO
```

Example 4

Operation: Use the standard form of the macro to define a generic data set profile protecting a resource named PROFNAME. Use the discrete profile protecting a resource named MDELPROF whose volser is in MDELVOL as a model for the new profile. Notify the user named USERNAME of any access attempts that have been rejected because they exceed the UACC of READ which you are allowing.

```
RACDEF ENTITY=PROFNAME,CLASS='DATASET',GENERIC=YES,MENTITY=MDELPROF,  X
       MVOLSER=MDELVOL,UACC=READ,NOTIFY=USERNAME,RELEASE=1.7
```

Example 5

Operation: Use the standard form of the macro to define a tape-volume profile for a volume whose ID is VOLID. Allow a universal-access level of READ.

```
RACDEF ENTITY=VOLID,CLASS='TAPEVOL',UACC=READ
```

Example 6

Operation: Use the standard form of the macro to delete a discrete data set profile named DSNAME, located on the volume named VOLID.

```
RACDEF TYPE=DELETE,ENTITY=DSNAME,VOLSER=VOLID,CLASS='DATASET'
```

RACDEF (list form)

The list form of the RACDEF macro is written as follows:

name	*name*: Symbol. Begin *name* in column 1.
b	One or more blanks must precede RACDEF.
RACDEF	
b	One or more blanks must follow RACDEF.
ENTITY=*profile name addr*	*profile name addr*: A-type address. **Note:** ENTITY must be specified on either the list or the execute form of the macro.
,VOLSER=*vol addr*	*vol addr*: A-type address **Note:** VOLSER is required (on either LIST or EXECUTE) only for CLASS='DATASET' and DSTYPE not equal to M when a discrete profile name is used.
,TYPE=DEFINE	
,TYPE=DEFINE, NEWNAME= *new dsn addr*	*new dsn addr*: A-type address
,TYPE=ADDVOL, OLDVOL= *old vol addr*	*old vol addr*: A-type address
,TYPE=CHGVOL, OLDVOL= *old vol addr*	
,TYPE=DELETE	**Default:** TYPE=DEFINE
,DDNAME=*'ddname'* ,DDNAME=*ddname addr*	*ddname*: 1–8 character name *ddname addr*: A-type address **Note:** DDNAME is valid for OPEN/CLOSE routine.
,DSTYPE=N ,DSTYPE=V ,DSTYPE=M ,DSTYPE=T	**Default:** DSTYPE=N
,INSTLN=*parm list addr*	*parm list addr*: A-type address
,CLASS=*'class name'* ,CLASS=*class name addr*	*class name*: 1–8 character class name. *class name addr*: A-type address **Default:** CLASS='DATASET'
,MENTITY=*entity addr*	*entity addr*: A-type address

,MCLASS=*'class name'* ,MCLASS=*class name addr*	*class name*: 1–8 character class name *class name addr*: A-type address **Default:** MCLASS='DATASET'
,MVOLSER=*volser addr*	*volser addr*: A-type address
,MGENER=ASIS ,MGENER=YES	**Default:** MGENER=ASIS
,ACEE=*acee addr*	*acee addr*: A-type address
,UNIT=*unit addr*	*unit addr*: A-type address
,OWNER=*owner id addr*	*owner id addr*: A-type address
,LEVEL=*number*	**Default:** Zero.
,UACC=ALTER ,UACC=CONTROL ,UACC=UPDATE ,UACC=READ ,UACC=EXECUTE ,UACC=NONE	
,DATA=*data addr*	*data addr*: A-type address
,AUDIT=NONE ,AUDIT=*audit value* ,AUDIT=(*audit value (access level), audit value (access level)*)	*audit value*: ALL, SUCCESS, or FAILURES *access level*: READ, UPDATE, CONTROL, or ALTER **Default:** READ
,RACFIND=YES ,RACFIND=NO	
,CHKAUTH=YES ,CHKAUTH=NO	**Default:** CHKAUTH=NO
,GENERIC=YES ,GENERIC=ASIS	**Default:** GENERIC=ASIS
,WARNING=YES ,WARNING=NO	**Default:** WARNING=NO **Note:** Warning is valid only if TYPE=DEFINE is specified.
,FILESEQ=*number*	*number*: 1–9999
,EXPDT=*expir-date addr* ,RETPD=*retn-period addr* ,EXPDTX=	*expir-date addr*: A-type address *retn-period addr*: A-type address *extended-expir-date addr*: A-type address or register (2) - (12)

extended-expir-date addr	
,ENVIR=VERIFY	Specifies that only verification is to be done. **Default:** Normal RACDEF processing.
,RESOWN=*resource owner addr*	*resource owner addr*: A-type address
,STORCLA=*storage class addr*	*storage class addr*: A-type address
,MGMTCLA=*management type*	*management type*: A-type address **Default:** See description of parameter.
,ACCLVL=*(access value addr)*	*access value addr*: A-type address
,ACCLVL=(*access value addr,parm list addr)*	*parm list addr*: A-type address
,TAPELBL=STD ,TAPELBL=BLP ,TAPELBL=NL	**Default:** TAPELBL=STD
,SECLVL=*addr*	*addr*: A-type address
,ERASE=YES ,ERASE=NO	**Default:** ERASE=NO
,NOTIFY=*notify-id addr*	*notify-id addr*: A-type address
,MF=L	

The parameters are explained under the standard form of the RACDEF macro instruction with the following exception:

,MF=L
specifies the list form of the RACDEF macro instruction.

RACDEF (execute form)

The execute form of the RACDEF macro is written as follows:

name	*name*: Symbol. Begin *name* in column 1.
b	One or more blanks must precede RACDEF.
RACDEF	

b	One or more blanks must follow RACDEF.
ENTITY=*profile name addr*	*profile name addr*: Rx-type address **Note:** ENTITY must be specified on either the list or the execute form of the macro.
,VOLSER=*vol addr*	*vol addr*: Rx-type address or register (2) - (12) **Note:** VOLSER is required only for CLASS='DATASET' and DSTYPE not equal to M when a discrete profile name is used.
,TYPE=DEFINE	
,TYPE=DEFINE, NEWNAME= *new dsn addr*	*new dsn addr*: Rx-type address or register (2) - (12)
,TYPE=ADDVOL, OLDVOL= *old vol addr*	*old vol addr*: Rx-type address or register (2) - (12)
,TYPE=CHGVOL, OLDVOL= *old vol addr*	
,TYPE=DELETE	
,DDNAME=*ddname addr*	*ddname addr*: A-type address or register (2) - (12) **Note:** DDNAME is valid for OPEN/CLOSE routine.
,DSTYPE=N	
,DSTYPE=V	
,DSTYPE=M	
,DSTYPE=T	
,INSTLN=*parm list addr*	*parm list addr*: Rx-type address or register (2) - (12)
,CLASS=*class name addr*	*class name addr*: Rx-type address or register (2) - (12)
,MENTITY=*entity addr*	*entity addr*: Rx-type address or register (2) - (12)
,MCLASS=*class name addr*	*class name addr*: Rx-type address or register (2) - (12)
,MVOLSER=*volser addr*	*volser addr*: Rx-type address or register (2) - (12)
,MGENER=ASIS	
,MGENER=YES	
,ACEE=*acee addr*	*acee addr*: Rx-type address or register (2) - (12)
,UNIT=*unit addr*	*unit addr*: Rx-type address or register (2) - (12)
,OWNER=*owner id addr*	*owner id addr*: Rx-type address or register (2) - (12)

,LEVEL=*number*	
,LEVEL=*reg*	*reg*: Register (2) - (12)
,UACC=ALTER	
,UACC=CONTROL	
,UACC=UPDATE	
,UACC=READ	
,UACC=EXECUTE	
,UACC=NONE	
,UACC=*reg*	*reg*: Register (2) - (12)
,DATA=*data addr*	*data addr*: Rx-type address or register (2) - (12)
,AUDIT=NONE	
,AUDIT=*audit value*	*audit value*: ALL, SUCCESS, or FAILURES
,AUDIT=(*audit value* *(access level),* *audit value* *(access level))*	*access level*: READ, UPDATE, CONTROL, or ALTER
,AUDIT=*(reg)*	*reg*: Register (2) - (12)
,RACFIND=YES	
,RACFIND=NO	
,CHKAUTH=YES	
,CHKAUTH=NO	
,GENERIC=YES	
,GENERIC=NO	
,WARNING=YES	
,WARNING=NO	**Note:** Warning is valid only if TYPE=DEFINE is specified.
,RELEASE=*number*	*number*: 1.8.1, 1.8, 1.7, or 1.6
,RELEASE=(,CHECK)	**Default:** RELEASE=1.6
,RELEASE= *(number,*CHECK)	
,FILESEQ=*reg*	*reg*: Register (2) - (12)
,FILESEQ=*number*	*number*: 1–9999
,EXPDT=*expir-date addr*	*expir-date addr*: Rx-type address or register (2) - (12)
,RETPD=*retn-period addr*	*retn-period addr*: Rx-type address or register (2) - (12)
,EXPDTX= *extended-expir-date addr*	*extended-expir-date addr*: A-type address or register (2) - (12)
,ENVIR=VERIFY	Specifies that only verification is to be done.
,RESOWN=*resource owner addr*	*resource owner addr*: Rx-type address or register (2) - (12)

,STORCLA=*storage class addr*	*storage class addr*: Rx-type address or register (2) - (12)
,MGMTCLA=*management class addr*	*management class addr*: Rx-type address or register (2) - (12)
,ACCLVL=*(access value addr)*	*access value addr*: Rx-type address or register (2) - (12)
,ACCLVL=(*access value addr,parm list addr)*	*parm list addr*: Rx-type address or register (2) - (12)
,TAPELBL=STD ,TAPELBL=BLP ,TAPELBL=NL	
,SECLVL=*addr*	*addr*: Rx-type address or register (2) - (12)
,ERASE=YES ,ERASE=NO	
,NOTIFY=*notify-id addr*	*notify-id addr*: Rx-type address or register (2) - (12)
,MF=(E,*ctrl addr*)	*ctrl addr*: Rx-type address or register (1) or (2) - (12)

The parameters are explained under the standard form of the RACDEF macro instruction with the following exceptions:

,MF=(E,*ctrl addr)*
specifies the execute form of the RACDEF macro, using a remote, control-program parameter list.

,RELEASE=*number*
,RELEASE=(,CHECK)
,RELEASE=(*number***,CHECK)**
specifies the RACF release level of the parameter list to be generated by this macro.

To use the parameters associated with a release, you must specify the release number of that release or a later release number. If you specify an earlier release level, the parameter is not accepted by macro processing, and an error message is issued at assembly time. For the parameters that are valid for RELEASE=1.6 and later, see Table 15 on page 283.

The default is RELEASE=1.6.

When you specify the RELEASE keyword, checking is done at assembly time. Compatibility between the list and execute forms of the RACDEF macro is validated at execution time if you specify the CHECK subparameter on the execute form of the macro.

The size of the list form expansion must be large enough to accommodate all parameters defined by the RELEASE keyword on the execute form of the macro. Otherwise, when CHECK processing is requested, the execute form of the macro is not done, and a return code of X'64' is returned.

RACHECK: Check RACF authorization

The RACHECK macro is used to provide authorization checking when a user requests access to a RACF-protected resource. These parameters are restricted in use and must be used only by programs that are authorized (APF-authorized, in system key 0–7, or in supervisor state).

Note: Only callers in 24-bit addressing mode can issue this macro. Callers executing in 31-bit addressing mode who want to use the RACHECK function can code the RACROUTE macro.

RACHECK (standard form)

The standard form of the RACHECK macro is written as follows:

name	*name*: Symbol. Begin *name* in column 1.
ƀ	One or more blanks must precede RACHECK.
RACHECK	
ƀ	One or more blanks must follow RACHECK.
PROFILE=*profile addr*	*profile addr*: A-type address or register (2) - (12)
ENTITY=(*resource name addr*)	*resource name addr*: A-type address or register (2) - (12)
ENTITY=(*resource name addr,CSA*)	
ENTITY=(*resource name addr*,PRIVATE)	
ENTITY=(*resource name addr*,NONE)	
,VOLSER=*vol addr*	*vol addr*: A-type address or register (2) - (12) **Note:** VOLSER is required only for CLASS=‘DATASET’ and DSTYPE not equal to M when a discrete profile name is used and only when ENTITY is also coded.
,CLASS=*‘class name’*	*class name*: 1–8 character class name
,CLASS=*class name addr*	*class name addr*: A-type address or register (2) - (12)
,ATTR=READ ,ATTR=UPDATE ,ATTR=CONTROL ,ATTR=ALTER ,ATTR=*reg*	*reg*: Register (2) - (12) **Default:** ATTR=READ
,DDNAME=*‘ddname’*	*ddname*: 1–8 character name
,DDNAME=*ddname addr*	*ddname addr*: A-type address or register (2) - (12) **Note:** DDNAME is valid for OPEN/CLOSE routine only.

,DSTYPE=N ,DSTYPE=V ,DSTYPE=M ,DSTYPE=T	**Default:** DSTYPE=N
,INSTLN=*parm list addr*	*parm list addr*: A-type address or register (2) - (12)
,LOG=ASIS ,LOG=NOFAIL ,LOG=NONE ,LOG=NOSTAT	**Default:** LOG=ASIS
,OLDVOL=*old vol addr*	*old vol addr*: A-type address or register (2) - (12)
,APPL=*'applname'* ,APPL=*applname addr*	*applname*: 1–8 character name A-type address or register (2) - (12)
,ACEE=*acee addr*	*acee addr*: A-type address or register (2) - (12)
,ACCLVL=(*access value addr)*	*access value addr*: A-type address or register (2) - (12)
,ACCLVL=(*access value addr,parm list addr)*	*parm list addr*: A-type address or register (2) - (12)
,RACFIND=YES ,RACFIND=NO	
,GENERIC=YES ,GENERIC=ASIS	**Default:** GENERIC=ASIS
,FILESEQ=*reg* ,FILESEQ=*number*	*reg*: Register (2) - (12) *number*: 1–9999
,TAPELBL=STD ,TAPELBL=BLP ,TAPELBL=NL	**Default:** TAPELBL=STD
,STATUS=NONE ,STATUS=ERASE	**Default:** STATUS=NONE
,USERID=*'userid'* ,USERID=*userid addr*	*userid*: 1–8 character user ID *userid addr*: A-type address or register (2) - (12)
,GROUPID=*'groupid'* ,GROUPID=*groupname addr*	*groupname*: 1–8 character group name *groupname addr*: A-type address or register (2) - (12)

The parameters are explained as follows:

,PROFILE=*profile addr*
,ENTITY=(*resource name addr***)**

,ENTITY=(*resource name addr*, **CSA)**

,ENTITY=(*resource name addr***,PRIVATE)**
,ENTITY=(*resource name addr***,NONE)**

PROFILE=*profile addr* specifies that RACF authorization checking is to be performed for the resource whose profile is pointed to by the specified address. This profile must be supplied by ENTITY=(*xxx*,CSA). A profile supplied by RACLIST is not acceptable. To specify PROFILE, programs must be APF-authorized and in Supervisor State. The programs must also be in System Key 0 or in the same key as the storage of the profile.

For the ENTITY keyword, the resource name is a 44-byte DASD data set name for CLASS='DATASET', or a 6-byte volume serial number for CLASS='DASDVOL' or CLASS='TAPEVOL'. The length of all other resource names is determined from the class descriptor tables.

- ENTITY=(*resource name addr*) specifies that RACF authorization checking is to be performed for the resource whose name is pointed to by the specified address. The name must be left-justified in the field and padded with blanks.
- ENTITY=(*resource name addr***,CSA**) specifies that RACF authorization checking is to be performed for the indicated resource, and that a copy of the profile is to be maintained in main storage. The storage acquired for the profile is obtained from the common storage area (CSA), and is fetch-protected, key 0 storage. The issuer of RACHECK must free this storage when the profile is no longer needed. (The profile subpool number and length are part of the profile data returned.) If CSA is specified and the return code produced by the RACHECK macro instruction is 00 or 08, the address of the profile is returned in register 1.

  Only programs that are APF-authorized, system key 0–7, or in supervisor state can use the CSA parameter.

  By establishing and maintaining a resource profile, the resource manager can reduce the I/O required to perform RACF authorization checks on frequently accessed resources.
- ENTITY=(*resource name addr***,PRIVATE**) PRIVATE specifies the same as CSA except that RACHECK returns the profile in the user's private area rather than in common storage, and the name field contains the name of the returned profile instead of the name of the resource that was specified on the ENTITY keyword. The issuer of RACHECK must free this storage when the profile is no longer needed. (The profile subpool number and length are returned as well as the profile data.)

  Only programs that are APF-authorized, system key 0–7, or in supervisor state can use the PRIVATE parameter.
- ENTITY=(*resource name addr***,NONE**) specifies the same as ENTITY=resource name address. However, no profile is returned.

,VOLSER=*vol addr*

specifies the volume serial number, as follows:

- For MVS/VSAM DASD data sets, this is the volume serial number of the catalog controlling the data set.
- For non-VSAM DASD data sets and tape data sets, this is the volume serial number of the volume on which the data set resides.

The volume serial number is optional if DSTYPE=M is specified; it is ignored if the profile name is generic.

The field pointed to by the specified address contains the volume serial number, padded to the right with blanks if necessary to make six characters. VOLSER= is only valid and must be supplied with CLASS='DATASET', (unless DSTYPE=M is specified) and if ENTITY is also coded.

,CLASS=*'class name'*
,CLASS=*class name addr*
specifies that RACF authorization checking is to be performed for a resource of the specified class. If an address is specified, the address must point to a 1-byte field indicating the length of the class name, followed by the class name.

,ATTR=READ
,ATTR=UPDATE
,ATTR=CONTROL
,ATTR=ALTER
,ATTR=*reg*
specifies the access authority of the user or group permitted access to the resource for which RACF authorization checking is to be performed:
READ: RACF user or group can open the resource only to read.
UPDATE: RACF user or group can open the resource to write or read.
CONTROL: For VSAM data sets, RACF user or group has authority equivalent to the VSAM control password. For non-VSAM data sets and other resources, RACF user or group has UPDATE authority.
ALTER: RACF user or group has total control over the resource.

If a register is specified, the register must contain one of the following codes in the low-order byte of the register:
X'02' READ
X'04' UPDATE
X'08' CONTROL
X'80' ALTER.

,DDNAME=*'ddname'*
,DDNAME=*ddname addr*
specifies the ddname associated with the data set name that is specified as the ENTITY name.

This keyword is intended for use only by OPEN processing.

,DSTYPE=N
,DSTYPE=V
,DSTYPE=M
,DSTYPE=T
specifies the type of data set associated with the request:
- N for non-VSAM
- V for VSAM
- M for model profile
- T for tape.

DSTYPE=T should not be specified unless the SETROPTS TAPEDSN option is active (RCVTTDSN bit is on); otherwise, the processing is the same as for RACHECK CLASS='TAPEVOL'.

DSTYPE should be specified only for CLASS='DATASET'.

,INSTLN=*parm list addr*
specifies the address of an area that is to contain parameter information meaningful to the RACHECK installation exit routine. This information is passed to the installation exit routine when it is given control by RACHECK.

The INSTLN parameter can be used by an application program acting as a resource manager that needs to pass information to the RACHECK installation exit routine.

,LOG=ASIS
,LOG=NOFAIL
,LOG=NONE
,LOG=NOSTAT
specifies the types of access attempts to be recorded on the SMF data set.
ASIS: RACF records the event in the manner specified in the profile that protects the resource.
NOFAIL: If the authorization check fails, the attempt is not recorded. If the authorization check succeeds, the attempt is recorded as in ASIS.
NONE: The attempt is not to be recorded.

LOG=NONE suppresses both messages and SMF records regardless of MSGSUPP=NO.
NOSTAT: The attempt is not to be recorded. No logging is to occur, and no resource statistics are to be updated (including messages and SMF records).

Only programs that are APF-authorized, system key 0–7, or in supervisor state, can use the LOG parameter.

,OLDVOL=*old vol addr*
specifies a volume serial:

- For CLASS=‘DATASET’, within the same multivolume data set specified by VOLSER=.
- For CLASS=‘TAPEVOL’, within the same tape volume specified by ENTITY=.

RACF authorization checking verifies that the OLDVOL specified is part of the same multivolume data set or tape-volume set.

The specified address points to the field that contains the volume serial number, padded to the right with blanks if necessary to make six characters.

,APPL=‘*applname***’**
,APPL=*applname addr*
specifies the name of the application requesting authorization checking. The *applname* is not used for the authorization-checking process but is made available to the installation exit routine or routines called by the RACHECK routine. If the address is specified, the address must point to an 8-byte field containing the application name, left-justified and padded with blanks.

,ACEE=*acee addr*
specifies the address of the ACEE to be used during RACHECK processing. If no ACEE is specified, RACF uses the TASK ACEE pointer (TCBSENV) in the extended TCB. If the TASK ACEE pointer is zero, RACF uses the main ACEE for the address space. The main ACEE is pointed to by the ASXBSENV field of the address-space extension block.

Only programs that are APF-authorized, system key 0–7, or in supervisor state, can use the ACEE parameter.

,ACCLVL=(*access value addr***)**
,ACCLVL=(*access value addr,parm list addr***)**
specifies the tape-label access-level information for the MVS tape-label functions. The access value pointed to by the specified address is a 1-byte length field, containing the value (0–8) of the length of the following data,

followed by an 8-character string that is passed to the RACHECK installation exit routines. The optional parameter list pointed to by the specified address contains additional information to be passed to the RACHECK installation exit routines. RACF does not inspect or modify this information.

,RACFIND=YES
,RACFIND=NO
indicates whether or not the resource is protected by a discrete profile. The RACF processing and the possible return codes are given in Table 16.

Note: In all cases, a return code of X'0C' is also possible if the OLDVOL specified was not part of the multivolume data set defined by VOLSER, or it was not part of the same tape volume defined by ENTITY.

,GENERIC=YES
,GENERIC=ASIS
specifies whether the resource name is to be treated as a generic profile name. If GENERIC is specified with CLASS=DEFINE, NEWNAME, then GENERIC applies to both the old and new names. GENERIC is ignored if the GENCMD option on the RACF SETROPTS command is not specified for the class. (See *z/OS Security Server RACF Command Language Reference*.)

This keyword is designed primarily for use by RACF commands.

- If GENERIC=YES is specified, the resource name is considered a generic profile name, even if it does not contain either of the generic characters: an asterisk (*****) or a percent sign (**%**).
- If GENERIC=ASIS is specified, the resource name is considered a generic only if it contains either of the generic characters: an asterisk (*****) or a percent sign (**%**).

Table 16. Types of Profile Checking Performed by RACHECK

Operand	Generic Profile Checking Inactive	Generic Profile Checking Active
RACFIND=YES	Look for discrete profile; if found, exit with return code 00 or 08. If no discrete profile is found, exit with return code 08.	Look for discrete profile; if found, exit with return code 00 or 08. Look for generic profile; if found, exit with return code 00 or 08. Exit with return code 08 if neither a discrete nor a generic profile is found.
RACFIND=NO	No checking. Exit with return code 04. (See note).	Look for generic profile; if found, exit with return code 00 or 08. If not found, exit with return code 04. (See note).
RACFIND not specified	Look for discrete profile; if found, exit with return code 00 or 08. If no discrete profile is found, exit with return code 04. (See note).	Look for discrete profile; if found, exit with return code 00 or 08. Look for generic profile; if found, exit with return code 00 or 08. Exit with return code 04 if neither a discrete nor a generic profile is found. (See note).
Note: If PROTECTALL is active, no profile is found, and the user ID whose authority was checked does not have the SPECIAL attribute, RACF returns a return code X'08' instead of a return code X'04' and denies access.		

,FILESEQ=*number*
,FILESEQ=*reg*
specifies the file-sequence number of a tape data set on a tape volume or within a tape-volume set. The value must be in the range 1 through 9999. If a register is specified, it must contain the file sequence number in the low-order halfword. If CLASS='DATASET' and DSTYPE=T are not specified, FILESEQ is ignored.

,TAPELBL=STD|BLP|NL
specifies the type of tape-label processing to be done:
- STD: IBM or ANSI standard labels
- BLP: Bypass label processing
- NL: Unlabeled tapes.

For TAPELBL=BLP, the user must have the requested authority to the profile ICHBLP in the general-resource class FACILITY. For TAPELBL=NL or BLP, the user is not allowed to protect volumes with volume serial numbers in the format "L*nnnnn*".

This parameter is primarily intended for use by data-management routines to indicate the label type from the LABEL keyword on the JCL statement.

This parameter is valid only for CLASS='DATASET' and DSTYPE=T, or CLASS='TAPEVOL'.

,STATUS=NONE|ERASE
specifies whether or not RACHECK is to return the erase status of the given data set. This parameter is valid only for CLASS='DATASET' and a DSTYPE value other than T.

,USERID='*userid***'**
,USERID=*user ID addr*
specifies the user ID that RACF uses to perform third-party RACHECK. This is an 8-character field that is left-justified and padded to the right with blanks.

If USERID is specified when the caller invokes RACHECK, RACF verifies that user's authority to the given entity; RACF disregards the user ID associated with the ACEE of the caller.

For third-party RACHECK, RACF performs the following steps:
1. Checks to see whether the USERID keyword is *NONE* and GROUPID is not specified. If so, then RACF creates a default user (null) ACEE, which it uses to perform the RACHECK.
2. If not, checks to see whether an additional (third-party) ACEE already exists, chained off the current caller's ACEE or the ACEE specified in the ACEE= keyword.
3. If so, checks to see whether the user ID in that ACEE matches the one specified on the USERID keyword. If so, RACHECK uses the existing ACEE and avoids RACINIT processing.
4. If USERID is specified and RACHECK does not find an additional (third-party) ACEE, or the user ID in the ACEE does not match the user ID specified on the USERID keyword, then RACHECK creates a third-party ACEE based on the USERID keyword.
5. If the GROUPID keyword is specified in addition to the USERID keyword, and a third-party ACEE already exists, the group name of the existing third-party ACEE must also match the group name specified on the

GROUPID keyword. If the GROUPID keywords do not match, RACHECK creates a third-party ACEE based on the USERID keyword.

Note: If the calling program does not specify the GROUPID keyword, the internal RACINIT function uses the default group associated with the specified user ID.

Only programs that are APF-authorized, system key 0–7, or in supervisor state, can use the USERID and GROUPID keywords.

Note: If the user ID is *NONE* and a GROUPID has not been specified, then a default user (null) ACEE is created and used to satisfy RACHECK processing.

,GROUPID='*groupid***'**
,GROUPID=*groupid addr*

specifies the group name that RACF uses to perform third-party RACHECK.

If the calling program wants a third-party RACHECK performed on the group name rather than the user ID, the USERID keyword must be specified as *NONE*. When the caller invokes third-party RACHECK, RACF verifies the authority of the group name to the requested resource; RACF disregards the group name associated with the ACEE of the caller. For third-party RACHECK, RACF performs the following steps:

- Checks to see whether an additional (third-party) ACEE already exists, chained off the caller's ACEE, or the ACEE specified in the ACEE= keyword.
- If so, checks to see whether the group name matches that specified on the GROUPID keyword. If so, RACHECK uses that ACEE and avoids RACINIT processing.
- If GROUPID is specified and RACHECK does not find an additional (third-party) ACEE, or the group name in the ACEE does not match the group ID specified on the GROUPID keyword, RACHECK creates a third-party ACEE based on the GROUPID keyword.

Only programs that are APF-authorized, system key 0–7, or in supervisor state, can use the USERID and GROUPID keywords.

Parameters for RELEASE=1.6 through 1.8.2

The RELEASE values for which a specific parameter is valid are marked with an 'X'. RELEASE=1.6 is the default.

Table 17. RACHECK Parameters for RELEASE=1.6 through 1.8.2

Parameter	RELEASE=1.6	RELEASE=1.7	RELEASE=1.8, 1.8.1, or 1.8.2
ACEE=	X	X	X
ACCLVL=	X	X	X
APPL=	X	X	X
ATTR=	X	X	X
CLASS=	X	X	X
DSTYPE=N, V, or M	X	X	X
DSTYPE=T		X	X
ENTITY=	X	X	X

Table 17. RACHECK Parameters for RELEASE=1.6 through 1.8.2 (continued)

Parameter	RELEASE=1.6	RELEASE=1.7	RELEASE=1.8, 1.8.1, or 1.8.2
FILESEQ=		X	X
GENERIC=	X	X	X
GROUPID=			X
INSTLN=	X	X	X
LOG=	X	X	X
OLDVOL=	X	X	X
OWNER=	X	X	X
PROFILE=	X	X	X
RACFIND=	X	X	X
RELEASE=	X	X	X
STATUS=		X	X
TAPELBL=		X	X
USERID=			X
VOLSER=	X	X	X

Return codes and reason codes

If the return codes and reason codes you are receiving are not discussed in this macro, refer to the return codes and reason codes described with RACROUTE REQUEST=AUTH on page 44.

When control is returned, register 15 contains one of the following return codes, and register 0 can contain a reason code.

Hex Code **Meaning**

00 The user is authorized by RACF to obtain use of a RACF-protected resource. Register 0 contains one of the following reason codes:

Reason Code	Meaning
00	Indicates a normal completion.
04	Indicates STATUS=ERASE was specified and the data set is to be erased when scratched. Otherwise, indicates that the warning status of the resource was requested by the RACHECK issuer setting bit X'10' at offset 12 decimal in the RACHECK parameter list and the resource is in warning mode.
10	When CLASS=TAPEVOL, indicates the TAPEVOL profile contains a TVTOC.
20	When CLASS=TAPEVOL, indicates that the TAPEVOL profile can contain a TVTOC, but currently does not (for a scratch pool volume).
24	When CLASS=TAPEVOL, indicates that the TAPEVOL profile does not contain a TVTOC.

04 The specified resource is not protected by RACF. Register 0 contains the following reason code:

Reason Code	Meaning
00	Indicates a normal completion.

08 The user is **not** authorized by RACF to obtain use of the specified RACF-protected resource. Register 0 contains the following reason code:

00	Indicates a normal completion. A possible cause would be PROTECTALL is active, no profile is found, and the user ID whose authority was checked does not have the SPECIAL attribute.
04	Indicates STATUS=ERASE was specified and the data set is to be erased when scratched.
08	Indicates DSTYPE=T or CLASS=‘TAPEVOL’ was specified and the user is not authorized to use the specified volume.
0C	Indicates the user is not authorized to use the data set.
10	Indicates DSTYPE=T or CLASS=‘TAPEVOL’ was specified and the user is not authorized to specify LABEL=(,BLP).
1C	User with EXECUTE authority to the data set profile specified ATTR=READ, and RACF failed the access attempt.

0C The OLDVOL specified was not part of the multivolume data set defined by VOLSER, or it was not part of the same tape volume defined by ENTITY.

10 RACINIT issued by third-party RACHECK failed. Register 0 contains the RACINIT return code.

64 Indicates that the CHECK subparameter of the RELEASE keyword was specified on the execute form of the RACHECK macro; however, the list form of the macro does not have the proper RELEASE parameter. Macro processing terminates.

Example 1

Operation: Perform RACF authorization checking using the standard form, for a non-VSAM data set residing on the volume pointed to by register 8. Register 7 points to the data set name, and the RACF user is requesting the highest level of control over the data set. The “RACF-indicated” bit in the data set’s DSCB is on. Logging and statistics updates are **not** to be done.

```
RACHECK  ENTITY=((R7)),VOLSER=(R8),CLASS='DATASET',              X
         ATTR=ALTER,RACFIND=YES,LOG=NOSTAT
```

Example 2

Operation: Perform RACF authorization checking using the standard form, for a non-VSAM data set controlled by the catalog pointed to by register 8. Register 7 points to the data set name, and the RACF user is requesting the highest level of control over the data set. The “RACF-indicated” bit in the data set’s DSCB is on.

```
RACHECK ENTITY=((R7)),VOLSER=(R8),CLASS='DATASET',              X
               ATTR=ALTER,RACFIND=YES
```

Example 3

Operation: Perform RACF authorization checking using the standard form, for a VSAM data set residing on the volume pointed to by register 8. Register 7 points to the data set name, and the RACF user is requesting the data set for Read only. Register 4 points to an area containing additional parameter information.

```
RACHECK ENTITY=((R7)),VOLSER=(R8),CLASS='DATASET',              X
               DSTYPE=V,INSTLN=(R4)
```

Example 4

Operation: Using the standard form, perform RACF authorization checking for a tape volume for Read access only. The tape volume is pointed to by register 8 and the volume's access level is in register 5.

```
RACHECK ENTITY=((R8)),CLASS='TAPEVOL',ATTR=READ,                X
               ACCLVL=((R5))
```

Example 5

Operation: Using the standard form, perform third party RACF authorization checking for a data set for Read access only for a user. Register 7 points to the data set name, and register 8 points to the volume on which the data set resides.

```
RACHECK ENTITY=((R7)),VOLSER=(R8),CLASS='DATASET',              X
               ATTR=READ,USERID='SOMEUSER'
```

Example 6

Operation: Using the standard form, perform third-party RACF authorization checking for a data set for Read access only for a group. Register 7 points to the data set name, and register 8 points to the volume on which the data set resides.

```
RACHECK ENTITY=((R7)),VOLSER=(R8), CLASS='DATASET',ATTR=READ    X
               USERID='*NONE*',GROUPID='ANYGROUP'
```

Example 7

Operation: Using the standard form, perform third-party RACF authorization checking for a data set for a user connected to a group. Register 7 points to the data set name, and register 8 points to the volume on which the data set resides.

```
RACHECK ENTITY=((R7)),VOLSER=(R8),CLASS='DATASET',ATTR=READ     X
               USERID='SOMEUSER',GROUPID='ANYGROUP'
```

Example 8

Operation: Using the standard form, perform third-party RACF authorization checking for a data set (with Read-only access). Register 7 points to the data set name, and register 8 points to the volume on which the data set resides. A is an 8-byte declared field padded with zeros.

```
RACHECK ENTITY=((R7)), VOLSER=(R8),CLASS='DATASET',             X
               ATTR=READ,USERID=A
```

RACHECK (list form)

The list form of the RACHECK macro is written as follows:

name	*name*: Symbol. Begin *name* in column 1.
b	One or more blanks must precede RACHECK.
RACHECK	
b	One or more blanks must follow RACHECK.
PROFILE=*profile addr*	*profile addr*: A-type address.
ENTITY=(*resource name addr*)	*resource name addr*: A-type address.
ENTITY=(*resource name addr*,CSA)	**Note:** PROFILE or ENTITY is required on either the list or the execute form of the macro.
ENTITY=(*resource name addr*,PRIVATE)	
ENTITY=(*resource name addr*,NONE)	
,VOLSER=*vol addr*	*vol addr*: A-type address. **Note:** VOLSER is required on either the list or the execute form of the macro, but only for CLASS='DATASET' and DSTYPE not equal to M when a discrete profile name is used. If required, VOLSER must be specified on either the list or the execute form of the macro.
,CLASS=*'class name'*	*class name*: 1–8 character name
,CLASS=*class name addr*	*class name addr*: A-type address
,ATTR=READ ,ATTR=UPDATE ,ATTR=CONTROL ,ATTR=ALTER	**Default:** ATTR=READ
,DDNAME=*'ddname'*	*ddname*: 1–8 character name
,DDNAME=*ddname addr*	*ddname addr*: A-type address **Note:** DDNAME is valid for OPEN/CLOSE routine.
,DSTYPE=N ,DSTYPE=V ,DSTYPE=M ,DSTYPE=T	**Default:** DSTYPE=N
,INSTLN=*parm list addr*	*parm list addr*: A-type address.
,LOG=ASIS ,LOG=NOFAIL ,LOG=NONE	**Default:** LOG=ASIS
,OLDVOL=*old vol addr*	*old vol addr*: A-type address.

,APPL=*'applname'*	*applname*: 1–8 character name
,APPL=*applname addr*	*applname addr*: A-type address.
,ACEE=*acee addr*	*acee addr*: A-type address.
,ACCLVL=(*access value addr)*	*access value addr*: A-type address
,ACCLVL=(*access value addr,parm list addr)*	*parm list addr*: A-type address
,RACFIND=YES	
,RACFIND=NO	
,GENERIC=YES	**Default:** GENERIC=ASIS
,GENERIC=ASIS	
,FILESEQ=*number*	*number*: 1–9999
,TAPELBL=STD	**Default:** TAPELBL=STD
,TAPELBL=BLP	
,TAPELBL=NL	
,STATUS=NONE	**Default:** STATUS=NONE
,STATUS=ERASE	
,USERID=*'userid'*	*userid*: 1–8 character user ID
,USERID=*userid addr*	*userid addr*: A-type address
,GROUPID=*'groupid'*	*groupname*: 1–8 character group name
,GROUPID=*groupname addr*	*groupname addr*: A-type address
,MF=L	

The parameters are explained under the standard form of the RACHECK macro with the following exception:

,MF=L
specifies the list form of the RACHECK macro instruction.

RACHECK (execute form)

The execute form of the RACHECK macro is written as follows:

name	*name*: Symbol. Begin *name* in column 1.
ƀ	One or more blanks must precede RACHECK.
RACHECK	

b	One or more blanks must follow RACHECK.
PROFILE=*profile addr* ENTITY=(*resource name addr*) ENTITY=(*resource name addr*,CSA) ENTITY=(*resource name addr*,PRIVATE) ENTITY=(*resource name addr*,NONE)	*profile addr*: Rx-type address or register (2) - (12) *resource name addr*: Rx-type address or register (2) - (12) **Note:** PROFILE or ENTITY is required on either the list or the execute form of the macro.
,VOLSER=*vol addr*	*vol addr*: Rx-type address or register (2) - (12) **Note:** VOLSER is required on either the list or the execute form of the macro, but only for CLASS='DATASET' and DSTYPE not equal to M when a discrete profile name is used. If required, VOLSER must be specified on either the list or the execute form of the macro.
,CLASS=*class name addr*	*class name addr*: Rx-type address or register (2) - (12)
,RELEASE=*number* ,RELEASE=(,CHECK) ,RELEASE= (*number*,CHECK)	*number*: 1.8.2, 1.8.1, 1.8, 1.7, or 1.6 **Default:** RELEASE=1.6
,ATTR=READ ,ATTR=UPDATE ,ATTR=CONTROL ,ATTR=ALTER ,ATTR=*reg*	*reg*: Register (2) - (12)
,DDNAME=*ddname addr*	*ddname addr*: Rx-type address or register (2) - (12) **Note:** DDNAME is valid for OPEN/CLOSE routine.
,DSTYPE=N ,DSTYPE=V ,DSTYPE=M ,DSTYPE=T	
,INSTLN=*parm list addr*	*parm list addr*: Rx-type address or register (2) - (12)
,LOG=ASIS ,LOG=NOFAIL ,LOG=NONE ,LOG=NOSTAT	
,OLDVOL=*old vol addr*	*old vol addr*: Rx-type address or register (2) - (12)
,APPL=*applname addr*	*applname addr*: Rx-type address or register (2) - (12)

,ACEE=*acee addr*	*acee addr*: Rx-type address or register (2) - (12)
,ACCLVL=(*access value*) *addr*)	*access value addr*: Rx-type address or register (2) - (12)
,ACCLVL=(*access value*) *addr*)	Rx-type address or register (2) - (12)
,RACFIND=YES ,RACFIND=NO	
,GENERIC=YES ,GENERIC=ASIS	
,FILESEQ=*reg* ,FILESEQ=*number*	*reg*: Register (2) - (12) *number*: 1–9999
,TAPELBL=STD ,TAPELBL=BLP ,TAPELBL=NL	
,STATUS=NONE ,STATUS=ERASE	
,USERID=*userid addr*	*userid addr*: Rx-type address or register (2) - (12)
,GROUPID=*groupname addr*	*groupname addr*: Rx-type address or register (2) - (12)
,MF=(E,*ctrl addr*)	*ctrl addr*: Rx-type address or register (1) or (2) - (12)

The parameters are explained under the standard form of the RACHECK macro with the following exceptions:

,MF=(E,*ctrl addr*)
specifies the execute form of the RACHECK macro instruction.

,RELEASE=(*number*,CHECK)
,RELEASE=1.6|1.7|1.8|1.8.1|1.8.2
,RELEASE=(,CHECK)
specifies the RACF release level of the parameter list to be generated by this macro.

To use the parameters associated with a release, you must specify the number of that release or a later release number. If you specify an earlier release level, the parameter is not accepted by macro processing, and an error message is issued at assembly time. For the parameters that are valid for RELEASE=1.6 and later, see Table 17 on page 300.

The default is RELEASE=1.6.

When you specify the RELEASE keyword, checking is done at assembly time. Compatibility between the list and execute forms of the RACHECK macro is validated at execution time if you specify the CHECK subparameter on the execute form of the macro.

The size of the list form expansion must be large enough to accommodate all parameters defined by the RELEASE keyword on the execute form of the macro. Otherwise, when CHECK processing is requested, the execute form of the macro is not done, and a return code of X'64' is returned.

RACINIT: Identify a RACF-defined user

The RACINIT macro is used to provide RACF user identification and verification. The macro instruction identifies a user and verifies that the user is defined to RACF and has supplied a valid password or operator-identification card (OIDCARD parameter), or both.

To issue the RACINIT macro the calling module must be “authorized,” which means one of the following:
- APF-authorized
- In system key 0–7
- In supervisor state.

Otherwise, the NEWPASS keyword must be omitted and the calling module must be all of the following:
- In the RACF-authorized caller table
- Fetched from an authorized library
- Reentrant.

Recommendation: If you run programs that issue the RACINIT macro, run those programs APF-authorized. See *z/OS Security Server RACF System Programmer's Guide* for important information on the authorized caller table.

Notes:

1. Only callers in 24-bit addressing mode can issue this macro. Callers executing in 31-bit addressing mode who want to use the RACINIT function can code the RACROUTE macro.
2. If automatic direction of application updates is active, RACINIT requests are not propagated. However, some ICHEINTY requests issued by RACINIT are propagated. For more information on which ICHEINTY requests are propagated, see “RACROUTE REQUEST=VERIFY: Identify and verify a RACF-defined user” on page 211.

RACINIT (standard form)

The standard form of the RACINIT macro is written as follows:

name	*name*: Symbol. Begin *name* in column 1.
b	One or more blanks must precede RACINIT.
RACINIT	
b	One or more blanks must follow RACINIT.

USERID=*userid addr*	*userid addr*: A-type address or register (2) - (12)
,PASSWRD=*password addr*	*password addr*: A-type address or register (2) - (12)
,START=*procname addr*	*procname addr*: A-type address or register (2) - (12)
,NEWPASS=*new password addr*	*new password addr*: A-type address or register (2) - (12)
,GROUP=*group addr*	*group addr*: A-type address or register (2) - (12) **Default:** zero.
,PGMNAME=*programmer name addr*	*programmer name addr*: A-type address or register (2) - (12)
,ACTINFO=*account addr*	*account addr*: A-type address or register (2) - (12)
,OIDCARD=*oid addr*	*oid addr*: A-type address or register (2) - (12)
,TERMID=*terminal addr*	*terminal addr*: A-type address or register (2) - (12)
,JOBNAME=*jobname addr*	*jobname addr*: A-type address or register (2) - (12)
,ENVIR=CREATE ,ENVIR=CHANGE	**Default:** ENVIR=CREATE **Notes:** 1. ENVIR=CHANGE cannot be specified with USERID=, PASSWRD=, START=, NEWPASS=, ACTINFO=, PGMNAME=, OIDCARD=, or TERMID= parameters. 2. ENVIR=DELETE cannot be specified with APPL=, USERID=, PASSWRD=, START=, NEWPASS=, GROUP=, ACTINFO=, PGMNAME=, OIDCARD=, or TERMID= parameters.
,ENVIR=DELETE	
,INSTLN=*parm list addr*	*parm list addr*: A-type address or register (2) - (12)
,APPL=*'applname'*	*applname*: 1–8 character name
,APPL=*applname addr*	*applname addr*: A-type address or register (2) - (12)
,ACEE=*acee addr*	*acee addr*: A-type address or register (2) - (12)
,SUBPOOL=*subpool number*	*subpool number*: Decimal digit 0–255.
,SMC=YES ,SMC=NO	**Default:** SMC=YES
,PASSCHK=YES ,PASSCHK=NO	**Default:** PASSCHK=YES

,ENCRYPT=YES ,ENCRYPT=NO	**Default:** ENCRYPT=YES
,STAT=ASIS ,STAT=NO	**Default:** STAT=ASIS
,LOG=ASIS ,LOG=ALL	**Default:** LOG=ASIS

The parameters are explained as follows:

USERID=*userid addr*
specifies the user identification of the user who has entered the system. The address points to a 1-byte length field, followed by the user ID, which can be up to 8 characters in length.

If the USERID= keyword is omitted, “*” is the default.

,PASSWRD=*password addr*
specifies the currently defined password of the user who has entered the system. The address points to a 1-byte length field, followed by the password, which can be up to eight characters in length.

,START=*procname addr*
specifies the process name of a started task. The address points to an 8-byte area containing the process name (left-justified and padded with blanks, if necessary). If you do not specify the USERID keyword, but do specify the START keyword, then RACF searches the started-procedure table to determine the user ID.

,NEWPASS=*new password addr*
specifies the password that is to replace the user’s currently defined password. The address points to a 1-byte length field, followed by the password, which can be up to eight characters in length.

,GROUP=*group addr*
specifies the group specified by the user who has entered the system. The address points to a 1-byte length field, followed by the group name, which can be up to eight characters in length.

If the GROUP= keyword is omitted, “*” is the default.

,PGMNAME=*programmer name addr*
specifies the address of the name of the user who has entered the system. This 20-byte area is passed to the RACINIT installation exit routine; it is not used by the RACINIT routine.

,ACTINFO=*account addr*
specifies the address of a field containing accounting information. This 144-byte area is passed to the RACINIT installation exit routine; it is not used by the RACINIT routine. The accounting field, if supplied, should have the following format:

- The first byte of field contains the number (binary) of accounting fields.
- The following bytes contain accounting fields, where each entry for an accounting field contains a 1-byte length field, followed by the field.

,OIDCARD=*oid addr*
specifies the address of the currently defined operator-identification card of the user who has entered the system. The address points to a 1-byte length field, followed by the operator-ID card.

,TERMID=*terminal addr*
specifies the address of the identifier for the terminal through which the user is accessing the system. The address points to an 8-byte area containing the terminal identifier. Information specified by TERMID= on an ENVIR=CREATE can be attached to the created ACEE and used in subsequent RACF processing. RACF does not make its own copy of this area when attaching this information to the created ACEE. This area must not be explicitly freed prior to the deletion of the ACEE. For the same reason, the area must reside in a non-task-related storage subpool so that implicit freeing of the area does not occur.

,JOBNAME=*jobname addr*
specifies the address of the job name of a background job. The address points to an 8-byte area containing the job name (left-justified and padded with blanks if necessary). The JOBNAME parameter is used by RACINIT during authorization checking to verify the user's authority to submit the job. It is passed to the installation exit routine.

,ENVIR=CREATE
,ENVIR=CHANGE
,ENVIR=DELETE
specifies the action to be performed by the user-initialization component regarding the ACEE:

- CREATE: The user should be verified and an ACEE created.
- CHANGE: The ACEE should be modified according to other parameters specified on RACINIT. You can change only the connect group with this option.
- DELETE: The ACEE should be deleted. This parameter should be used only if a previous RACINIT has completed successfully.

  Recommendation: Issue a RACINIT,ENVIR=DELETE to delete only an ACEE that you created. See "Recommendations for changing or deleting an ACEE" on page 314 for alternative options.

,INSTLN=*parm list addr*
specifies the address of an area containing parameter information meaningful to the RACINIT installation exit routine. This area is passed to the installation exit when the exit routine is given control from the RACINIT routine.

The INSTLN parameter can be used by an installation having a user verification or job initiation application, and wanting to pass information from one installation module to the RACINIT installation exit routine.

,APPL='*applname***'**
,APPL=*applname addr*
specifies the name of the application issuing the RACINIT. If an address is specified, the address must point to an 8-byte application name, left-justified and padded with blanks if necessary.

,ACEE=*acee addr*
specifies the address of the ACEE.

For ENVIR=DELETE: specifies the address of a fullword that contains the address of the ACEE to be deleted. If ACEE= is not specified, and the TCBSENV field for the task using the RACINIT is nonzero, the ACEE pointed to

by the TCBSENV is deleted, and TCBSENV is set to zero. If the TCBSENV and ASXBSENV fields both point to the same ACEE, ASXBSENV is also set to zero. If no ACEE address is passed, and TCBSENV is zero, the ACEE pointed to by ASXBSENV is deleted, and ASXBSENV is set to zero.

For ENVIR=CHANGE: specifies the address of a fullword that contains the address of the ACEE to be changed. If ACEE= is not specified, and the TCBSENV field for the task using the RACINIT is nonzero, the ACEE pointed to by the TCBSENV is changed. If TCBSENV is 0, the ACEE pointed to by ASXBSENV is changed.

For ENVIR=CREATE: specifies the address of a fullword into which the RACINIT function places the address of the ACEE created. If an ACEE is not specified, the address of the newly created ACEE is stored in the TCBSENV field of the task control block. If the ASXBSENV field is set to binary zeros, the new ACEE address is also stored in the ASXBSENV field of the ASXB. If the ASXBSENV field is nonzero, it is not modified. The TCBSENV field is set unconditionally.

Notes:

1. If you omit USERID, GROUP, and PASSWRD and if you code ENVIR=CREATE or if ENVIR=CREATE is used as the default, you receive a return code of X'00' and obtain an ACEE that contains an * (X'5C') in place of the user ID and group name.
2. If ACEE is specified with ENVIR=CREATE, RACF suppresses the creation of a modeling table (MDEL) to reduce the amount of CSA and local system queue area (LSQA) storage required by IMS/VS and CICS/VS installations.

,SUBPOOL=*subpool number*
specifies the storage subpool from which the ACEE and related storage are obtained. The value of subpool can be literally specified or passed through a register. When literally specified, the valid values are 0 through 255. When you use a register, the subpool number is the value of the least significant byte in the register.

,SMC=YES
,SMC=NO
specifies the use of the step-must-complete function of RACINIT processing. SMC=YES specifies that RACINIT processing should continue to make other tasks for the step non-dispatchable. SMC=NO specifies that the step-must-complete function is not used.

Note: SMC=NO should not be used if DADSM ALLOCATE/SCRATCH functions execute simultaneously in the same address space as the RACINIT function.

,PASSCHK=YES
,PASSCHK=NO
specifies whether the user's password or OIDCARD is to be verified. PASSCHK=YES specifies that RACINIT verifies the user's password or OIDCARD. PASSCHK=NO specifies that the user's password or OIDCARD is not verified.

,ENCRYPT=YES
,ENCRYPT=NO
specifies whether or not RACINIT encodes the old password, the new password, and the OIDCARD data passed to it.

YES signifies that the data specified by the PASSWRD, NEWPASS, and OIDCARD keywords are not pre-encoded. RACINIT encodes the data before storing it in the user profile or using it to compare against stored data. ENCRYPT=YES is the default for this keyword.

NO signifies that the data specified by the PASSWRD, NEWPASS, and OIDCARD keywords are already encoded. RACINIT bypasses the encoding of this data before storing it in or comparing it against the user profile.

,STAT=ASIS|NO
specifies whether the statistics controlled by the installation's options on the RACF SETROPTS command are to be maintained or ignored for this execution of RACINIT. This parameter also controls whether a message is to be issued when the logon is successful.

Note: Messages are always issued if the RACINIT processing is unsuccessful.

If STAT=ASIS is specified or taken by default, the messages and statistics are controlled by the installation's current options on the RACF SETROPTS command.

If STAT=NO is specified, the statistics are not updated. And if the logon is successful, no message is issued.

The default is STAT=ASIS.

,LOG=ASIS|ALL
specifies when log records are to be generated.

If LOG=ASIS is specified or defaulted to, only those attempts to create an ACEE that fails generate RACF log records.

If LOG=ALL is specified, any request to create an ACEE, regardless of whether it succeeds or fails, generates a RACF log record. The default is LOG=ASIS.

Parameters for RELEASE=1.6 through 1.8.1

The RELEASE values for which a specific parameter is valid are marked with an 'X'. RELEASE=1.6 is the default.

Table 18. RACINIT Parameters for RELEASE=1.6 through 1.8.1

Parameter	RELEASE=1.6	RELEASE=1.7	RELEASE=1.8 or 1.8.1
ACEE=	X	X	X
ACCTINFO=	X	X	X
APPL=	X	X	X
ENCRYPT=	X	X	X
ENVIR=	X	X	X
GROUP=	X	X	X
INSTLN=	X	X	X
JOBNAME=	X	X	X
LOG=		X	X
NEWPASS=	X	X	X
OIDCARD=	X	X	X
PASSCHK=	X	X	X

Table 18. RACINIT Parameters for RELEASE=1.6 through 1.8.1 (continued)

Parameter	RELEASE=1.6	RELEASE=1.7	RELEASE=1.8 or 1.8.1
PASSWRD=	X	X	X
PGMNAME=	X	X	X
RELEASE=	X	X	X
SMC=	X	X	X
START=	X	X	X
STAT=		X	X
SUBPOOL=	X	X	X
TERMID=	X	X	X
USERID=	X	X	X

Recommendations for changing or deleting an ACEE

Delete only an ACEE that you created. Issuing a RACINIT with ENVIR=DELETE specified to delete the existing ACEE can lead to problems if you are not the one who created that environment. The issuer of the ENVIR=CREATE that built the ACEE might have saved a pointer to it and might be expecting it to be available later in processing. Note that this is the case for the initiator's ACEE. Also, if you delete an ACEE, you might lose tables anchored off that ACEE that are needed later in RACF processing. See *z/OS Security Server RACF Diagnosis Guide* for overview diagrams of ACEEs and related control blocks that can be useful when diagnosing problems.

Note: When you delete an ACEE that has a third-party ACEE attached, the RACINIT pre- or post-exits get control again for the third-party ACEE as well as for the original ACEE being deleted.

If you make a copy of the ACEE and update fields, avoid passing it to RACHECK or RACDEF. These services anchor tables off the ACEE and refresh these tables when required. If you update fields in a copy, the original ACEE then contains incorrect pointers that result in abends when the original is used or deleted.

If you need to delete or change an ACEE that you did not create, you can use one of the following methods.

- **Save and restore the current ACEE pointers:**
  1. Save the current ACEE pointers from ASXBSENV and TCBSENV.
  2. Clear ASXBSENV and TCBSENV.
  3. Issue RACINIT ENVIR=CREATE.
  4. At the end of processing,
     a. Issue ENVIR=DELETE
     b. Restore ASXBSENV and TCBSENV to the original values.
- **Change the values in the current ACEE:**
  Issue RACINIT with ENVIR=CHANGE to change the values in the current ACEE.
- **Create, anchor, and delete a third-party ACEE:**
  Issue RACHECK with USERID= and GROUPID= causing RACF to create, anchor, and delete a third-party ACEE internally.

Return codes and reason codes

If the return codes and reason codes you are receiving are not discussed in this macro, refer to the return codes and reason codes described with RACROUTE REQUEST=VERIFY “Return codes and reason codes” on page 231.

When control is returned, register 15 contains one of the following return codes, and register 0 can contain a reason code.

Hex Code	Meaning
00	RACINIT has completed successfully.
04	The user profile is not defined to RACF.
08	The password is not authorized.
0C	The password has expired.
10	The new password is not valid.
14	The user is not defined to the group.
18	RACINIT was failed by the installation exit routine.
1C	The user’s access has been revoked.
20	RACF is not active.
24	The user’s access to the specified group has been revoked.
28	OIDCARD parameter is required but not supplied.
2C	OIDCARD parameter is not valid for specified user.
30	The user is not authorized to use the terminal. Register 0 contains one of the following reason codes:
	Reason Code — **Meaning**
	00 — Indicates a normal completion.
	04 — Indicates the user is not authorized to access the system on this day, or at this time of day.
	08 — Indicates the terminal cannot be used on this day, or at this time of day.
34	The user is not authorized to use the application.
64	Indicates that the CHECK subparameter of the RELEASE keyword was specified on the execute form of the RACINIT macro; however, the list form of the macro does not have the proper RELEASE parameter. Macro processing terminates.

Example 1

Operation: Use the standard form of the macro to do the following:
- Create an ACEE for the user ID and its default group.
- Verify that the user named USERNAME is a valid user.
- Verify that the password called PASSWORD is valid.

```
RACINIT ENVIR=CREATE,USERID=USERNAME,PASSWRD=PASSWORD
```

Example 2

Operation: Use the standard form to do the following:
- Verify that the user named USERNAME is a valid user.

- Verify that the group named GROUPNAM is a valid group.
- Verify that USERNAME is defined to the group.
- Create an ACEE for the user and group and put its address in ACEEANCH.
- Specify that the user's password is not required.

```
RACINIT ENVIR=CREATE,USERID=USERNAME,GROUP=GROUPNAM,ACEE=ACEEANCH,    X
          PASSCHK=NO
```

Example 3

Operation: Use the standard form of the macro to delete the ACEE of the current task or address space, or both.

```
RACINIT ENVIR=DELETE
```

RACINIT (list form)

The list form of the RACINIT macro is written as follows:

name	*name*: Symbol. Begin *name* in column 1.
b	One or more blanks must precede RACINIT.
RACINIT	
b	One or more blanks must follow RACINIT.
USERID=*userid addr*	*userid addr*: A-type address.
,PASSWRD=*password addr*	*password addr*: A-type address.
,START=*procname addr*	*procname addr*: A-type address.
,NEWPASS=*new password addr*	*new password addr*: A-type address.
,GROUP=*group addr*	*group addr*: A-type address.
,PGMNAME=*programmer name addr*	*programmer name addr*: A-type address.
,ACTINFO=*account addr*	*account addr*: A-type address.
,OIDCARD=*oid addr*	*oid addr*: A-type address.
,TERMID=*terminal addr*	*terminal addr*: A-type address.
,JOBNAME=*jobname addr*	*jobname addr*: A-type address.

,ENVIR=CREATE ,ENVIR=CHANGE	**Default:** ENVIR=CREATE **Notes:** 1. ENVIR=CHANGE cannot be specified with USERID=, PASSWRD=, START=, NEWPASS=, ACTINFO=, PGMNAME=, OIDCARD=, or TERMID= parameters. 2. ENVIR=DELETE cannot be specified with APPL=, USERID=, PASSWRD=, START=, NEWPASS=, GROUP=, ACTINFO=, PGMNAME=, OIDCARD=, or TERMID= parameters.
,ENVIR=DELETE	
,INSTLN=*parm list addr*	*parm list addr*: A-type address.
,APPL=*'applname'* ,APPL=*applname addr*	*applname*: 1–8 character name *applname addr*: A-type address.
,ACEE=*acee addr*	*acee addr*: A-type address.
,SUBPOOL=*subpool number*	*subpool number*: Decimal digit 0–255.
,SMC=YES ,SMC=NO	**Default:** SMC=YES
,PASSCHK=YES ,PASSCHK=NO	**Default:** PASSCHK=YES
,ENCRYPT=YES ,ENCRYPT=NO	**Default:** ENCRYPT=YES
,STAT=ASIS ,STAT=NO	**Default:** STAT=ASIS
,LOG=ASIS ,LOG=ALL	**Default:** LOG=ASIS

,MF=L

The parameters are explained under the standard form of the RACINIT macro instruction with the following exception:

,MF=L
specifies the list form of the RACINIT macro instruction.

RACINIT (execute form)

The execute form of the RACINIT macro is written as follows:

name	*name*: Symbol. Begin *name* in column 1.

b	One or more blanks must precede RACINIT.
RACINIT	
b	One or more blanks must follow RACINIT.
USERID=*userid addr*	*userid addr*: Rx-type address or register (2) - (12)
,PASSWRD=*password addr*	*password addr*: Rx-type address or register (2) - (12)
,START=*procname addr*	*procname addr*: Rx-type address or register (2) - (12)
,NEWPASS=*new password addr*	*new password addr*: Rx-type address or register (2) - (12)
,GROUP=*group addr*	*group addr*: Rx-type address or register (2) - (12)
,PGMNAME=*programmer name addr*	*programmer name addr*: Rx-type address or register (2) - (12)
,ACTINFO=*account addr*	*account addr*: Rx-type address or register (2) - (12)
,OIDCARD=*oid addr*	*oid addr*: Rx-type address or register (2) - (12).
,TERMID=*terminal addr*	*terminal addr*: Rx-type address or register (2) - (12)
,JOBNAME=*jobname addr*	*jobname addr*: Rx-type address or register (2) - (12)
,ENVIR=CREATE ,ENVIR=CHANGE	**Notes:** 1. ENVIR=CHANGE cannot be specified with USERID=, PASSWRD=, START=, NEWPASS=, ACTINFO=, PGMNAME=, OIDCARD=, or TERMID= parameters. 2. ENVIR=DELETE cannot be specified with APPL=, USERID=, PASSWRD=, START=, NEWPASS=, GROUP=, ACTINFO=, PGMNAME=, OIDCARD=, or TERMID= parameters.
,ENVIR=DELETE	
,INSTLN=*parm list addr*	*parm list addr*: Rx-type address or register (2) - (12)
,APPL=*applname addr*	*applname addr*: Rx-type address or register (2) - (12)
,ACEE=*acee addr*	*acee addr*: Rx-type address or register (2) - (12)
,SUBPOOL=*subpool*	*subpool number*: Decimal digit 0–255.

number	
,SMC=YES ,SMC=NO	
,PASSCHK=YES ,PASSCHK=NO	
,ENCRYPT=YES ,ENCRYPT=NO	
,RELEASE=*number* ,RELEASE=(,CHECK) ,RELEASE= *(number,*CHECK)	*number*: See Standard Form **Default:** RELEASE=1.6
,STAT=ASIS ,STAT=NO	
,LOG=ASIS ,LOG=ALL	
,MF=(E,*ctrl addr)*	*ctrl addr*: Rx-type address or register (1) or (2) - (12)

The parameters are explained under the standard form of the RACINIT macro instruction with the following exceptions:

,MF=(E,*ctrl addr*)
specifies the execute form of the RACINIT macro, using a remote, control-program parameter list.

,RELEASE=1.6|1.7|1.8|1.8.1
,RELEASE=(,CHECK)
,RELEASE=(*number*,CHECK)
specifies the RACF release level of the parameter list to be generated by this macro.

To use the parameters associated with a release, you must specify the release number of that release or a later release number. If you specify an earlier release level, the parameter is not accepted by macro processing, and an error message is issued at assembly time. If you specify a parameter with an incompatible release level, the parameter is not accepted by macro processing. An error message is issued at assembly time. For the parameters that are valid for RELEASE=1.6 and later, see Table 18 on page 313.

The default is RELEASE=1.6.

When you specify the RELEASE keyword, checking is done at assembly time. Compatibility between the list and execute forms of the RACINIT macro is validated at execution time if you specify the CHECK subparameter on the execute form of the macro.

The size of the list form expansion must be large enough to accommodate all parameters defined by the RELEASE keyword on the execute form of the macro. Otherwise, when CHECK processing is requested, the execute form of the macro is not done, and a return code of X'64' is returned.

RACLIST: Build in-storage profiles

RACLIST is used to build in-storage profiles for RACF-defined resources. RACLIST processes only those resources described by class descriptors. The primary advantage of using the RACLIST macro is to use the resource-grouping function and to improve resource-authorization-checking performance.

The module calling the RACLIST macro must either be authorized (APF-authorized, in system key 0–7, or in supervisor state) or reentrant in the RACF-authorized caller table and fetched from an authorized library.

Recommendation: If you run programs that issue the RACLIST macro, run those programs APF-authorized. See *z/OS Security Server RACF System Programmer's Guide* for important information on the authorized caller table.

Note: Only callers in 24-bit addressing mode can issue this macro. Callers executing in 31-bit addressing mode who want to use the RACLIST function can code the RACROUTE macro.

RACLIST (standard form)

The standard form of the RACLIST macro is written as follows:

name	*name*: Symbol. Begin *name* in column 1.
b	One or more blanks must precede RACLIST.
RACLIST	
b	One or more blanks must follow RACLIST.
CLASS=*'class name'*	*class name*: 1–8 character class name
CLASS=*class name addr*	*class name addr*: A-type address or register (2) - (12)
,LIST=*list addr*	*list addr*: A-type address or register (2) - (12)
,ACEE=*acee addr*	*acee addr*: A-type address or register (2) - (12)
,INSTLN=*parm list addr*	*parm list addr*: A-type address or register (2) - (12)
,APPL=*'applname'*	*applname*: 1–8 character name
,APPL=*applname addr*	*applname addr*: A-type address or register (2) - (12)
,SUBPOOL=(*sub#1,sub#2*)	*sub#1,sub#2*: Decimal digit 0–255.
,ENVIR=CREATE ,ENVIR=DELETE	**Default:** ENVIR=CREATE
,OWNER=YES	

,OWNER=NO **Default:** OWNER=NO

The parameters are explained as follows:

CLASS=‘*class name***’**
CLASS=*class name addr*
specifies that RACLIST is to build an in-storage profile for the resources of the specified class. If an address is specified, the address must point to an 8-byte field containing the class name, left-justified and padded with blanks if necessary.

The class name must be a valid, active class as defined in the class descriptor table. It must also be a member class. If the member class has a grouping class associated with it, RACF utilizes both the member and the grouping class when building the in-storage profiles.

,LIST=*addr*
specifies the address of a list of resource names for which RACLIST is to build the in-storage profiles. The list consists of a 2-byte field containing the number of the names in the list, followed by one or more variable-length names. Each name consists of a 1-byte length field, which is the length of the name, followed by the name. A zero in the 2-byte field causes the operand to be omitted. If LIST= is omitted, in-storage profiles are built for all the profiles defined to RACF in the given class as well as each member for a resource grouping associated with the specified class.

Note: This operand can be specified only with ENVIR=CREATE. If ENVIR=DELETE is specified, the RACLIST macro issues a return code of 18.

,ACEE=*acee addr*
specifies the address of the ACEE. The ACEE points to the in-storage profiles. If an ACEE is not specified, RACF uses the TASK ACEE pointer in the extended TCB called the TCBSENV. Otherwise, or if the TASK ACEE pointer is zero, RACF uses the main ACEE to obtain the list of the in-storage profiles. The main ACEE is pointed to by the ASXBSENV field of the address-space extension block. If an ACEE is not specified and there is no main ACEE, the in-storage profiles are not constructed.

,INSTLN=*parm list addr*
specifies the address of an area that contains parameter information for the RACLIST installation exit. The address is passed to the installation exit when the RACLIST routine gives control to the exit. An application or an installation program can use the INSTLN parameter to pass information to the RACLIST installation exit.

,APPL=‘*applname***’**
,APPL=*applname addr*
specifies the name of the application requesting the authorization checking. This information is not used for the authorization-checking process but is made available to the installation exit or exits. If an address is specified, it should point to an 8-byte area containing the application name, left justified and padded with blanks if necessary.

,SUBPOOL=(*sub#1,sub#2***)**
specifies the subpool numbers of the storage into which the components of the

in-storage profiles are to be built. Sub#1 represents the subpool of the profile index. Sub#2 represents the subpool of the profile proper. If the subpools are not specified they default to subpool 255. Registers can be used to specify sub#1 and sub#2. In that case, the least significant byte in the register is the subpool value.

,ENVIR=CREATE
,ENVIR=DELETE
specifies the action to be performed by the RACLIST macro.
CREATE: In-storage profiles for the specified class are to be built. The RACLIST function issues a return code of 18, if an in-storage list currently exists for the specified class.
DELETE: The in-storage profiles for the specified class are to be freed. If class is not specified, the in-storage profiles for all classes are freed.

Note: It is the responsibility of the user issuing the RACLIST macro to assure that no multitasking that results in the issuing of a RACHECK, FRACHECK, RACINIT, or RACLIST macro occurs at the same time that the RACLIST occurs.

,OWNER=YES
,OWNER=NO
specifies that the resource owner is to be placed in the profile access list with the ALTER authority. If the OWNER= operand is omitted, the default is NO.

Parameters for RELEASE=1.6 through 1.8.1

The RELEASE values for which a specific parameter is valid are marked with an 'X'. RELEASE=1.6 is the default.

Table 19. RACLIST Parameters for RELEASE=1.6 through 1.8.1

Parameter	RELEASE=1.6	RELEASE=1.7	RELEASE=1.8 or 1.8.1
ACEE=	X	X	X
APPL=	X	X	X
CLASS=	X	X	X
ENVIR=	X	X	X
INSTLN=	X	X	X
LIST=	X	X	X
OWNER=	X	X	X
RELEASE=	X	X	X
SUBPOOL=	X	X	X

Return codes and reason codes

If the return codes and reason codes you are receiving are not discussed in this macro, refer to the return codes and reason codes described in RACROUTE REQUEST=LIST "Return codes and reason codes" on page 156.

When control is returned, register 15 contains one of the following return codes, and register 0 can contain a reason code.

Hex Code	Meaning
00	RACLIST function completed successfully.

Reason Code	Meaning

0	Delete request successful. Create request successful and profiles were listed.
4	Create request successful but no profiles were listed.

04 Unable to perform the requested function. Register 0 contains additional codes as follows:

Reason Code	Meaning
0	Unable to establish an ESTAE environment.
1	The function code (the third byte of the parameter list) does not represent a valid function. 01 represents the RACF manager; 02 represents the RACLIST macro.

08 The specified class is not defined to RACF.

0C An error was encountered during RACLIST processing.

10 RACF or the resource class is not active, or both.

14 RACLIST installation exit error occurred.

18 Parameter-list error.

1C RACF is not installed, or an insufficient level of RACF is installed.

64 Indicates that the CHECK subparameter of the RELEASE keyword was specified on the execute form of the RACLIST macro; however, the list form of the macro does not have the proper RELEASE parameter. Macro processing terminates.

Note: If the resource class specified by the CLASS= operand is inactive, RACLIST does not build the in-storage profiles and a code of 0C is returned. If the resource-group class is not active, RACLIST builds an in-storage profile but only from the individual resource profiles; resource-group profiles are ignored.

Example 1

Operation: Use the standard form of the macro to build in-storage profiles for all the profiles in the DASDVOL class and chain them off the ACEE whose address is pointed to by ACEEADDR.

```
RACLIST CLASS='DASDVOL',ACEE=ACEEADDR,ENVIR=CREATE
```

Example 2

Operation: Use the standard form of the macro to build in-storage profiles for all the profiles whose names are in a list named PROFLIST and DASDVOL class. Chain them from the task ACEE or address space ACEE.

```
RACLIST CLASS='DASDVOL',LIST=PROFLIST,ENVIR=CREATE
   .
   .
   .
PROFLIST  DS   0CL35
PROFNUM   DC   XL2'0005'
PROF1     DC   AL1(6),CL6'DASD01'
PROF2     DC   AL1(6),CL6'DASD02'
PROF3     DC   AL1(5),CL5'DASDA'
PROF4     DC   AL1(5),CL5'DASDB'
PROF5     DC   AL1(6),CL6'MYDASD'
```

Example 3

Operation: Use the standard form of the macro to delete the in-storage profiles for the DASDVOL class.

```
RACLIST CLASS=DASDVOL,ENVIR=DELETE
```

RACLIST (list form)

The list form of the RACLIST macro is written as follows:

name	*name*: Symbol. Begin *name* in column 1.
b	One or more blanks must precede RACLIST.
RACLIST	
b	One or more blanks must follow RACLIST.
CLASS=*'class name'* CLASS=*class name addr*	*class name*: 1–8 character class name *class name addr*: A-type address
,LIST=*list addr*	*list addr*: A-type address
,ACEE=*acee addr*	*acee addr*: A-type address.
,INSTLN=*parm list addr*	*parm list addr*: A-type address.
,APPL=*'applname'* ,APPL=*applname addr*	*applname*: 1–8 character name *applname addr*: A-type address
,SUBPOOL=(*sub#1,sub#2*)	*sub#1,sub#2*: Decimal digit 0–255. **Default:** 255.
,ENVIR=CREATE ,ENVIR=DELETE	**Default:** ENVIR=CREATE
,OWNER=YES ,OWNER=NO	**Default:** OWNER=NO
,MF=L	

The parameters are explained under the standard form of the RACLIST macro with the following exception:

,MF=L
specifies the list form of the RACLIST macro instruction.

RACLIST (execute form)

The execute form of the RACLIST macro is written as follows:

name	*name*: Symbol. Begin *name* in column 1.
b	One or more blanks must precede RACLIST.
RACLIST	
b	One or more blanks must follow RACLIST.
CLASS=*class name addr*	*class name addr*: Rx-type address or register (2) - (12)
,LIST=*list addr*	*list addr*: Rx-type address or register (2) - (12)
,ACEE=*acee addr*	*acee addr*: Rx-type address or register (2) - (12)
,INSTLN=*parm list addr*	*parm list addr*: Rx-type address or register (2) - (12)
,APPL=*applname addr*	*applname addr*: Rx-type address or register (2) - (12)
,SUBPOOL=(*sub#1,sub#2*)	*sub#1,sub#2*: Decimal digit 0–255.
,ENVIR=CREATE ,ENVIR=DELETE	
,OWNER=YES ,OWNER=NO	
,RELEASE=*number* ,RELEASE=(,CHECK) ,RELEASE= *(number,*CHECK)	*number*: See Standard Form **Default:** RELEASE=1.6
,MF=(E,,*ctrl addr*)	*ctrl addr*: Rx-type address or register (2) - (12)

The parameters are explained under the standard form of the RACLIST macro with the following exceptions:

,MF=(E,*ctrl addr***)**
specifies the execute form of the RACLIST macro instruction, using a remote, control-program parameter list.

,RELEASE=*number*
,RELEASE=(,CHECK)

,RELEASE=(*number*,CHECK)
specifies the RACF release level of the parameter list to be generated by this macro.

To use the parameters associated with a release, you must specify the number of that release or a later release number. If you specify an earlier release level, the parameter is not accepted by macro processing, and an error is issued at assembly time. For the parameters that are valid for RELEASE=1.6 and later, see Table 19 on page 322.

The default is RELEASE=1.6. When you specify the RELEASE keyword, checking is done at assembly time. Compatibility between the list and execute forms of the RACLIST macro is validated at execution time if you specify the CHECK subparameter on the execute form of the macro.

The size of the list form expansion must be large enough to accommodate all parameters defined by the RELEASE keyword on the execute form of the macro. Otherwise, when CHECK processing is requested, the execute form of the macro is not done, and a return code of X'64' is returned.

RACROUTE: SAF router interface

The RACROUTE macro is used to invoke the system-authorization-facility (SAF) router. Depending on how your installation has written the SAF router exit and on whether RACF is present, the SAF router directs control to the RACF router. If RACF is active, the RACF router invokes RACF.

Note: Various RACF functions invoked by RACROUTE require that you specify the CLASS parameter, and that the specified CLASS be active. With few exceptions, for the portion of the table supplied by IBM, the class specified on the CLASS parameter **must** be active for the RACF router to invoke RACF. In the case of the installation-supplied portion of the table, there are no exceptions; the class specified on the CLASS parameter **must** be active for the RACF router to invoke RACF.

You can use RACROUTE to access the functions that are provided by the following RACF macros: RACDEF, RACINIT, RACXTRT, RACLIST, RACHECK, and FRACHECK. In coding the RACROUTE macro to access a particular RACF macro function, you must also use the necessary parameters from that macro on the RACROUTE macro instruction. For example, if you code RACROUTE to access the RACHECK function, you must code REQUEST=AUTH as well as any other required and optional parameters you need from the RACHECK macro. RACROUTE validates that only the parameters applicable to the RACHECK macro have been coded.

Notes:

1. For RACF Version 1 Release 6 and earlier, all parameters and parameter lists must reside below 16MB.
2. For RACF Version 1 Release 7 and later: If a caller is executing in 24-bit addressing mode, all parameters and parameter lists are assumed to reside below 16MB. If a caller, however, is executing in 31-bit addressing mode and is calling RACF using the RACROUTE macro instruction, RACF assumes that all parameters and parameter lists might reside above 16MB (that is, that all parameter addresses are true 31-bit addresses).

   All parameter lists generated by the RACROUTE macro are in a format that allows compiled code to be moved above 16MB without recompilation.

This 31-bit support is available only when RACF is called using RACROUTE, FRACHECK, or RACSTAT. Any caller that uses RACINIT, RACDEF, RACLIST or RACHECK must be in 24-bit addressing mode only. RACF does not support those callers in 31-bit mode.

RACROUTE (standard form)

The standard form of the RACROUTE macro is written as follows:

name	*name*: Symbol. Begin *name* in column 1.
b	One or more blanks must precede RACROUTE.
RACROUTE	
b	One or more blanks must follow RACROUTE.

REQUEST=AUTH
REQUEST=FASTAUTH
REQUEST=DEFINE
REQUEST=VERIFY
REQUEST=LIST
REQUEST=EXTRACT

,REQSTOR=*reqstor addr*	*reqstor addr*: A-type address or register (2) - (12) **Default:** zero. **Note:** If REQSTOR= is coded and RACF is installed, the RACF router table must be updated to match the operand.
,SUBSYS=*subsys addr*	*subsys addr*: A-type address or register (2) - (12) **Note:** If SUBSYS= is coded and RACF is installed, the RACF router table must be updated to match the operand.
,WORKA=*work area addr*	*work area addr*: A-type address or register (2) - (12)
,RELATED=*value*	*value*: Any valid macro keyword specified
,MSGRTRN=YES ,MSGRTRN=NO	**Default**=NO
,MSGSUPP=YES ,MSGSUPP=NO	**Default**=NO
,MSGSP=*subpool number*	**Decimal digit 0–255**

In addition to the parameters described above, all parameters valid on the RACDEF, RACLIST, RACINIT, RACXTRT, RACHECK, and FRACHECK macros are permitted on the RACROUTE macro. Depending on the parameter REQUEST=, some of these are required, some optional, and some are not valid.

The parameters are explained as follows:

REQUEST=AUTH
REQUEST=FASTAUTH
REQUEST=DEFINE
REQUEST=VERIFY
REQUEST=LIST
REQUEST=EXTRACT
specifies a code that determines the RACF parameter list to be issued internally, as well as the RACF routine to receive control. The permissible codes and their associated RACF macros are as follows:

Code	RACF Macro
AUTH	RACHECK
FASTAUTH	FRACHECK
DEFINE	RACDEF
VERIFY	RACINIT
LIST	RACLIST
EXTRACT	RACXTRT

For RACROUTE to work correctly, once you choose a REQUEST code you must also code (on the RACROUTE macro) the parameters that belong to the associated macro instruction. Please see the associated macro for the necessary parameters.

It is *not* part of the intended customer programming interface for customers or customer programs to specify the CLASS=, REQSTOR=, or SUBSYS= parameters with values that are contained in the RACF router table.

Notes:

1. Data areas returned by RACF to the caller is either above or below 16MB, depending upon the caller's addressing mode and the data area in question.
2. Unless the caller specifies the ACEE= parameter on a "RACROUTE REQUEST=VERIFY,ENVIR=CREATE" macro instruction, the ACEE is always placed below 16MB.
3. If the caller specifies the ACEE= parameter, is executing in 31-bit addressing mode, and does not specify LOC=BELOW on the RACROUTE macro instruction, the ACEE is placed, if possible, above 16MB.
4. If the ACEE is below 16MB, any area, with the exception of generic profiles, chained off an ACEE (for example, RACLIST profiles, list-of-groups table) is placed below 16MB. Otherwise, the area is placed above 16MB. However, a caller executing in 31-bit mode can issue a REQUEST=LIST with LOC=ABOVE, and the profiles are placed above 16MB, if possible, even if the ACEE is below 16MB.
5. If the caller requests that RACF return an in-storage profile in CSA as part of a "RACROUTE REQUEST=AUTH", the profile is returned in storage below 16MB if the related ACEE is located below the line. Otherwise, the area is located above 16MB.
6. The area returned by a "RACROUTE REQUEST=EXTRACT or EXTRACTN" request is located below 16MB.

,REQSTOR=*reqstor addr*
specifies the address of an 8-byte character field containing the control-point

name. (This address identifies a unique control point within a set of control points that exists in a subsystem.) If this operand is coded and RACF is installed, the RACF router table must be changed to match the operand. If the table is not updated, the default to bypass RACF processing is taken. For a description of the RACF router table and the macro used to update it, see "ICHRFRTB Macro" in *z/OS Security Server RACF Macros and Interfaces*.

If this operand is omitted, a string of eight blanks is assumed.

,SUBSYS=*subsys addr*
specifies the address of an 8-byte character field containing the calling subsystem's name, version, and release level. If this operand is coded and RACF is installed, the RACF router table must be changed to match the operand. If the table is not updated, the default to bypass RACF processing is taken. For a description of the RACF router table and the macro used to update it, see "ICHRFRTB Macro" in *z/OS Security Server RACF Macros and Interfaces*.

If this operand is omitted, a string of eight blanks is assumed.

,WORKA=*work area addr*
specifies the address of a 512-byte work area for use by the MVS router and the RACF front-end routine.

,RELATED=*value*
specifies information used to self-document macro instructions by relating functions or services to corresponding functions or services. The format and contents of the information specified is at the discretion of the user, and can be any valid coding value.

,MSGRTRN=NO|YES
specifies whether you want to use message-return processing. You can use this parameter in conjunction with the other RACROUTE MSG*xxxx* parameters to store and forward RACF messages. To use this parameter, you must also specify RELEASE=1.8 or a later release number.

Notes:

1. This parameter only applies to FRACHECK, RACHECK, RACDEF, and RACINIT.
2. When an automatic direction of application updates request is issued with the MSGRTRN keyword specified, the MSGRTRN keyword is not propagated.

,MSGSUPP=NO|YES
specifies whether you want to suppress write-to-operator (WTO) messages from within RACF processing. You can use this parameter in conjunction with the other RACROUTE MSG*xxxx* parameters to store and forward RACF messages. To use this parameter, you must also specify RELEASE=1.8 or a later release number.

Notes:

1. This parameter only applies to RACHECK, RACDEF, and RACINIT.
2. LOG=NONE suppresses both messages and SMF records regardless of MSGSUPP=NO.

,MSGSP=*subpool number*
specifies the number of the subpool into which you want RACF messages returned. You can use ,MSGSP in conjunction with the other RACROUTE MSG*xxxx* parameters to store and forward RACF messages. An unauthorized caller can only specify subpools 0 through 127.

To use this parameter, you must specify RELEASE=1.8 or later.

Notes:

1. This parameter only applies to RACHECK, RACDEF, and RACINIT.
2. Only ICH408I messages can be returned.
3. When control returns from RACROUTE, the RACROUTE parameter-list field is mapped by SAFPMSAD in the ICHSAFP mapping macro. SAFPMSAD is nonzero if messages have been returned. This field contains the address of an area that consists of two fullwords followed by the message itself in WTO parameter-list format. The first word is the length of the area, including the two fullword header; the second word points to the next message area, if there is one, or contains zero if no more message areas exist. If is your responsibility to issue the FREEMAIN macro to release these message areas.
4. When an automatic direction of application updates request is issued with the MSGSP keyword specified, the MSGSP keyword is not propagated.

Return Codes and Reason Codes

When control is returned, register 15 contains one of the following return codes, and register 0 can contain a reason code.

Hex Code	Meaning
00	The requested security function has completed successfully. In addition, if the requested function was AUTH, the authorization request was accepted.
04	The requested function has not been processed. In addition, if the request was AUTH, the SAF router could neither accept nor fail the request. The following are some possible reasons for a request's not being processed. **-** The SAF router is not active. **-** The RACF front-end routine detected that a null action was requested for the specified request type, resource type, and subsystem ID. **-** The request/resource/subsystem combination could not be found in the router table. **-** RACF is not active on the system, RACFIND=YES was not specified, and there is no RACROUTE installation exit routine (or an exit originated a return code of 4). **-** RACF is active on the system, but no profile exists for the specified resource.
08	The requested function was processed by RACF, the SAF router, or the router exit (ICHRTX00), and failed. If the requested function was AUTH, the authorization request failed. If RACF is inactive for an AUTH request with RACFIND=YES, the SAF router fails the request. The RACF or router-exit return code and reason codes are returned in the first two words of the RACROUTE input parameter list.

Example 1

Operation: Invoke the SAF router to perform authorization checking, using the standard form, for a non-VSAM data set residing on the volume pointed to by

register 8. Register 7 points to the data set name and the RACF user is requesting the highest level of control over the data set. The “RACF-indicated” bit in the data set’s DSCB is on.

```
RACROUTE  REQUEST=AUTH,WORKA=RACWK,ENTITY=((R7)),        X
          VOLSER=(R8),CLASS='DATASET',ATTR=ALTER,        X
          RACFIND=YES
  .
  .
RACWK     DS  CL512
```

Example 2

Operation: Invoke the SAF router to perform authorization checking, using the standard form, for an IMS/VS transaction pointed to by register 5. The user requests only READ access. The request is issued on behalf of the IMS/VS subsystem.

```
RACROUTE  REQUEST=FASTAUTH,SUBSYS=SUBIMS,               X
          WORKA=RACWK,ENTITY=(R5),                      X
          CLASS='TIMS',WKAREA=FRACWK,                   X
          ATTR=READ
  .
  .
  .
SUBIMS    DC  CL8'IMS'
FRACWK    DS  16F
RACWK     DS  CL512
```

RACROUTE (list form)

The list form of the RACROUTE macro is written as follows:

name	*name*: Symbol. Begin *name* in column 1.
b	One or more blanks must precede RACROUTE.
RACROUTE	
b	One or more blanks must follow RACROUTE.

REQUEST=AUTH
REQUEST=FASTAUTH
REQUEST=DEFINE
REQUEST=VERIFY
REQUEST=LIST
REQUEST=EXTRACT

,REQSTOR=*reqstor addr*	*reqstor addr*: A-type address. **Default:** Zero. **Note:** If REQSTOR= is coded and RACF is installed, the RACF router table must be updated to match the operand.
,SUBSYS=*subsys addr*	*subsys addr*: A-type address. **Note:** If SUBSYS= is coded and RACF is installed, the RACF router table must be updated to match the operand.

,WORKA=*work area addr*	*work area addr*: A-type address
,RELATED=*value*	*value*: Any valid macro keyword specified.
,MSGRTRN=YES ,MSGRTRN=NO	**Default:** NO
,MSGSUPP=YES ,MSGSUPP=NO	**Default:** NO
,MSGSP=*subpool number*	Decimal digit 0–255

,MF=L

In addition to the parameters described above, all parameters valid on the RACDEF, RACLIST, RACINIT, RACXTRT, RACHECK, and FRACHECK macros are permitted on the RACROUTE macro. Depending on the parameter REQUEST=, some of these are required, some optional, and some are not valid.

The parameters are explained under the standard form of the RACROUTE macro with the following exception:

,MF=L
specifies the list form of the RACROUTE macro instruction.

RACROUTE (execute form)

The execute form of the RACROUTE macro is written as follows:

name	*name*: Symbol. Begin *name* in column 1.
b	One or more blanks must precede RACROUTE.
RACROUTE	
b	One or more blanks must follow RACROUTE.

REQUEST=AUTH
REQUEST=FASTAUTH
REQUEST=DEFINE
REQUEST=VERIFY
REQUEST=LIST
REQUEST=EXTRACT

,REQSTOR=*reqstor addr*	*reqstor addr*: Rx-type address or register (2) - (12) **Note:** If REQSTOR= is coded and RACF is installed, the RACF router table must be updated to match the operand.

,SUBSYS=*subsys addr*	*subsys addr*: Rx-type address or register (2) - (12) **Note:** If SUBSYS= is coded and RACF is installed, the RACF router table must be updated to match the operand.
,WORKA=*work area addr*	*work area addr*: Rx-type address or register (2) - (12)
,RELATED=*value*	*value*: Any valid macro keyword specified.
,MSGRTRN=YES ,MSGRTRN=NO	
,MSGSUPP=YES ,MSGSUPP=NO	
,MSGSP=*subpool number*	Decimal digit 0–255
,RELEASE= (*number*, CHECK) ,RELEASE=*number* ,RELEASE=(,CHECK)	*number*: 1.8.1, 1.8, 1.7, or 1.6 **Default:** RELEASE=1.6
,MF=(E,*ctrl addr)*	*ctrl addr*: Rx-type address or register (1), (2) - (12)

In addition to the parameters described above, all parameters valid on the RACDEF, RACLIST, RACINIT, RACXTRT, RACHECK, and FRACHECK macros are permitted on the RACROUTE macro. Depending on the parameter REQUEST=, some of these are required, some optional, and some are not valid.

The parameters are explained under the standard form of the RACROUTE macro with the following exceptions:

,MF=(E, *ctrl addr***)**
specifies the execute form of the RACROUTE macro where *ctrl addr* is the address of the associated parameter list.

,RELEASE=(*number***,CHECK)**
,RELEASE=1.6|1.7|1.8|1.8.1
,RELEASE=(,CHECK)
specifies the RACF release level of the parameter list to be generated by this macro.

To use the parameters associated with a release, you must specify the release number of that release or a later release number. If you specify an earlier release level, the parameter is not accepted by macro processing, and an error message is issued at assembly time.

When you specify the RELEASE keyword, checking is done at assembly time. Execution-time validation of the compatibility between the list and execute forms of the RACROUTE macro can be done by your specifying the CHECK subparameter on the execute form of the macro.

When CHECK processing is requested, if the size of the list-form expansion is not large enough to accommodate all parameters defined by the RELEASE

keyword on the execute form of the macro, the execute form of the macro is not done. Instead, a return code of X'64' is generated.

RACSTAT macro

The RACSTAT macro is used to determine whether RACF is active, and, optionally, determine whether RACF protection is in effect for a given resource class. The RACSTAT macro can also be used to determine whether a resource-class name is defined to RACF.

RACSTAT is a branch-entered service that uses standard linkage conventions.

Note: For RACF release 1.6 and prior releases, only callers in 24-bit addressing mode can issue this macro.

RACSTAT macro (standard form)

The standard form of the RACSTAT macro is written as follows:

name	*name*: Symbol. Begin *name* in column 1.
b	One or more blanks must precede RACSTAT.
RACSTAT	
b	One or more blanks must follow RACSTAT.
,CLASS=*'class name'*	*class name*: 1–8 character class name
,CLASS=*class name addr*	*class name addr*: A-type address or register (2) - (12)
,ENTRY=*entry addr*	*entry addr*: A-type address or register (2) - (12)

The parameters are explained as follows:

,CLASS='*class name***'**
,CLASS=*class name addr*

specifies the class name for which RACF authorization checking is performed. The name can be explicitly defined on the macro by enclosing the name in quotes. If specified, the address must point to an 8-byte field containing the class name, left-justified and padded with blanks if necessary. If CLASS= is omitted, the status of RACF is returned.

The class name specified must be a general resource defined to RACF in the class descriptor table. For more information, see Appendix E, “IBM-supplied class descriptor table entries” on page 401.

Note: The classes DATASET, USER, and GROUP are not in the class descriptor table.

,ENTRY=*entry addr*
specifies the address of a 4-byte area that is set to the address of the specified class in the class descriptor table. This operand is ignored when the CLASS= operand is omitted.

Parameters for RELEASE=1.6 through 1.8.1

The RELEASE values for which a specific parameter is valid are marked with an 'X'. RELEASE=1.6 is the default.

Table 20. RACSTAT Parameters for RELEASE=1.6 through 1.8.1

Parameter	RELEASE=1.6	RELEASE=1.7	RELEASE=1.8 or 1.8.1
CLASS=	X	X	X
ENTRY=	X	X	X
RELEASE=	X	X	X

Return codes

If the return codes and reason codes you are receiving are not discussed in this macro, refer to the return codes and reason codes described with RACROUTE REQUEST=STAT "Return codes and reason codes" on page 185.

When control is returned, register 15 contains one of the following return codes:

Hex Code	Meaning
00	RACF is active and, if CLASS= was specified, the class is active.
04	RACF is active; the class is inactive.
08	RACF is active; the class is not defined to RACF.
0C	RACF is inactive and, if CLASS= was specified, the class is active.
10	RACF is inactive; the class is inactive.
14	RACF is inactive; the class is not defined to RACF.
18	RACF is not installed or an insufficient level of RACF is installed.
64	Indicates that the CHECK subparameter of the RELEASE keyword was specified on the execute form of the RACSTAT macro; however, the list form of the macro does not have the proper RELEASE parameter. Macro processing terminates.

Note: The class descriptor entry for the specified class is returned to the caller (in the 4-byte area addressed by the entry address), for return codes 00, 04, 0C, and 10.

Example 1

Operation: Determine whether the DASDVOL class is active and retrieve the address of its class descriptor. A fullword, CDADDR, contains the class descriptor address.

```
RACSTAT CLASS='DASDVOL',ENTRY=CDADDR
```

RACSTAT (list form)

The list form of the RACSTAT macro instruction is written as follows:

name	*name*: Symbol. Begin *name* in column 1.
b	One or more blanks must precede RACSTAT.
RACSTAT	
b	One or more blanks must follow RACSTAT.
,CLASS=*'class name'* ,CLASS=*class name addr*	*class name*: 1–8 character class name *class name addr*: A-type address.
,ENTRY=*entry addr*	*entry addr*: A-type address.
MF=L	

The parameters are explained under the standard form of the RACSTAT macro with the following exception:

MF=L
specifies the list form of the RACSTAT macro.

RACSTAT (execute form)

The execute form of the RACSTAT macro is written as follows:

name	*name*: Symbol. Begin *name* in column 1.
b	One or more blanks must precede RACSTAT.
RACSTAT	
b	One or more blanks must follow RACSTAT.
,CLASS=*class name addr*	*class name addr*: Rx-type address or register (2) - (12)
,ENTRY=*entry addr*	*entry addr*: Rx-type address or register (2) - (12)
,RELEASE=*number* ,RELEASE=(,CHECK) ,RELEASE=	*number*: 1.8.1, 1.8, 1.7, 1.6 **Default:** RELEASE=1.6

*(number,*CHECK)

MF=(E,*ctrl addr*) *ctrl addr*: Rx-type address or register (1) - (12)

The parameters are explained under the standard form of the RACSTAT macro with the following exceptions:

MF=(E,*ctrl addr*)
specifies the execute form of the RACSTAT macro, using a remote, control-program parameter list.

,RELEASE=*number*
,RELEASE=(,CHECK)
,RELEASE=(*number*,CHECK)
specifies the RACF release level of the parameter list to be generated by this macro.

Certain parameters can be specified only with particular releases. If you specify a parameter with an incompatible release level, the parameter is not accepted by the macro processing. An error message is issued at assembly time. For the parameters that are valid for RELEASE=1.6 and later, see Table 20 on page 335. When you specify the RELEASE keyword, checking is done at assembly time.

Compatibility between the list and execute forms of the RACSTAT macro is validated at execution time if you specify the CHECK subparameter on the execute form of the macro.

The size of the list form expansion must be large enough to accommodate all parameters defined by the RELEASE keyword on the execute form of the macro. Otherwise, when CHECK processing is requested, the execute form of the macro is not done, and a return code of X'64' is returned.

The default is RELEASE=1.6.

RACXTRT macro (standard form)

The RACXTRT macro is used to retrieve or replace certain specified fields from a RACF profile or to encode certain clear-text (readable) data.

This macro is only available to authorized callers (APF-authorized, in system key 0–7, or in supervisor state).

When activated, automatic direction of application updates propagates RACXTRT TYPE=REPLACE requests on to selected remote nodes. Only RACXTRT TYPE=REPLACE requests with return code 0 are propagated.

Notes:

1. Encoding, replacement, and extraction are mutually exclusive.
2. Only callers in 24-bit addressing mode can issue this macro. Callers executing in 31-bit addressing mode who want to use the RACXTRT function can code the RACROUTE macro.

The following RACXTRT functions are Programming Interfaces:

- Retrieving or updating fields in any other product segment (including WORKATTR) in the user, group and resource profiles.
- Retrieving or updating the following installation-reserved fields:
  - USERDATA
  - USRCNT
  - USRDATA
  - USRFLG
  - USRNM
- Retrieving the current or a specified user's default group or password.

The following RACXTRT function is part of the Programming Interface but is **not** recommended for use because the macro is not going to be enhanced in future releases.

- Retrieving or updating fields in the base segment of a user, resource, or group profile.

The standard form of the RACXTRT macro is written as follows:

name	*name*: Symbol. Begin *name* in column 1.
b	One or more blanks must precede RACXTRT.
RACXTRT	
b	One or more blanks must follow RACXTRT.

TYPE=EXTRACT
TYPE=EXTRACTN
TYPE=REPLACE
TYPE=ENCRYPT

,ENTITY=*profile name addr*	*profile name addr*: A-type address, or register (2) - (12)
,ACEE=*acee-address*	*acee*: A-type address, or register (2) - (12)
,VOLSER=*volser-address*	*vol address*: A-type address, or register (2) - (12)
,GENERIC=ASIS ,GENERIC=YES	**Default:** ASIS
,FLDACC=YES ,FLDACC=NO	**Default:** NO

If TYPE=EXTRACT or EXTRACTN is specified:

,SUBPOOL=*subpool number*	*subpool number*: Decimal digit, 0–255 **Default:** SUBPOOL=229

,DERIVE=*'YES'*	See explanation of keyword. **Default:** Normal processing
,CLASS=*'class name'* ,CLASS=*class name addr*	*class name*: 1–8 character class name *class name addr*: A-type address or register (2) - (12) **Default:** 'USER'
,SEGMENT=*'segment name'*	*segment name*: 1–8 character name
,SEGMENT=*segment name addr*	*segment name addr*: A-type address or register (2) - (12)
,FIELDS=*field addr*	*field addr*: A-type address or register (2) - (12)

If TYPE=REPLACE is specified:

,CLASS=*'class name'* ,CLASS=*class name addr*	*class name*: 1–8 character class name *class name addr*: A-type address or Register (2) - (12) **Default**: 'USER'
,SEGMENT=*'segment name'*	*segment name*: 1–8 character name
,SEGMENT=*segment name addr*	*segment name addr*: A-type address or register (2) - (12)
,FIELDS=*field addr*	*field addr*: A-type address or register (2) - (12)
,SEGDATA=*segment data addr*	*segment data addr*: A-type address or register (2) - (12)

If TYPE=ENCRYPT is specified:

,ENCRYPT=(*data address,DES*) ,ENCRYPT=(*data data address,HASH*) ,ENCRYPT=(*data address,INST*)	*data address*: A-type address or register (2) - (12) **Note:** If TYPE=ENCRYPT is specified, the only other allowable parameters are ENTITY, RELEASE, ENCRYPT, with ENCRYPT being required.

The parameters are explained as follows:

TYPE=EXTRACT
specifies the function to be performed by the extract function routine.

With Release 1.8 and later, RACXTRT can provide additional function: it can extract information from any field in any profile. See Appendix B, "RACF database templates" on page 355 for a definition of the type and name of each field in each profile. If you specify EXTRACT, the macro extracts information from the profile determined by the ENTITY and CLASS keywords. Specifically,

RACF extracts the fields specified in the FIELDS keyword from the segment specified by the SEGMENT keyword. If you do not specify ENTITY, RACF retrieves the desired information from the current user's profile.

To use TYPE=EXTRACT to extract field information from a profile, you must specify RELEASE=1.8 or later.

Note: If you specify TYPE=EXTRACT, do not specify ENCRYPT.

Upon return, register 1 contains the address of a result area that begins with a fullword containing the area's subpool number and length. It is your responsibility to issue a FREEMAIN to release the area after you are through using it.

The fields in the result area are in the order below:

Offset (Dec)	Data	Length (Dec)
0	Subpool of area	1
1	Length of area	3
4	Offset to start of optional field to contain segment data	2
6	Flag	1
7	Reserved	17
24	Specified or current user's user ID, if CLASS=USER	8
32	Specified user's default connect group or current user's current connect group, if CLASS=USER	8

In general, RACF returns field data in the order it was specified, with a 4-byte length field preceding each profile field. For example, if you are extracting a single field, you receive a 4-byte length field that contains the length of the field that follows. If the requested field is a variable length field, there is no additional length byte.

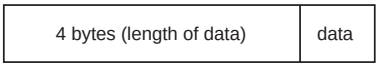

If you are extracting a combination field (representing one or more fields), you receive:

- A 4-byte length field that contains the combined length of all the fields that follow
- A combination field made up of 4-byte length fields followed by their respective individual data fields.

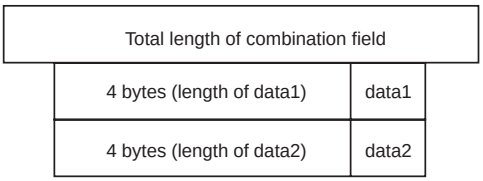

If you are extracting a single field within a repeat group, you receive:

- A 4-byte length field that contains the combined length of all the fields that follow.
- A 4-byte length field that indicates the length of the specified field in the first occurrence of the repeat group. This is followed by a 4-byte length field that

indicates the length of the specified field in the second occurrence of the repeat group. The pattern repeats until all the occurrences of the repeat group are accounted for.

Total length of all the following fields	
4 bytes (length of data1)	data1
4 bytes (length of data1)	data2

If you are extracting a combination field (representing one or more fields) within a repeat group, you receive:

- A 4-byte length field that contains the combined length of all the fields that follow.
- A combination field consisting of a 4-byte length field indicating the length of the individual data field that follows it, followed by the next 4-byte length field indicating the length of the next individual data field. The pattern repeats until all the individual fields that make up the combination field are accounted for. At the next occurrence of the repeat group the pattern begins again.

Total length of all the occurrences of the combination field in the repeat group.	
4 bytes (length of data1)	data1
4 bytes (length of data2)	data2
4 bytes (length of data1)	data1
4 bytes (length of data2)	data2

Specifying the name of a repeat-group count field retrieves only the 4-byte length followed by the 4-byte repeat group count.

When a field to be extracted is empty, the following results:

- For fixed-length fields, RACF returns the default as specified by the template definitions. The default for flag fields is X'00'. The default for fixed-length fields in the base segment of the profile in binary ones. The default for fixed-length fields in other segments is binary zeros.
- For variable-length fields, RACF returns a length of zero and no data.

  If CLASS=USER, when you specify EXTRACT, the macro extracts the user ID, connect group and, optionally, the encoded password from the user profile.

TYPE=EXTRACTN

specifies the function to be performed by the EXTRACT function routine.

Note: If you specify TYPE=EXTRACTN, do not specify ENCRYPT=.

Upon return, register 1 contains the address of a result area that begins with a fullword containing the area's subpool number and length. To see the format of the result area, see the explanation of TYPE=EXTRACT, above. At offset 6 in the result area, there is a flag. If the flag has a X'80', the name returned is generic.

If you specify EXTRACTN, the macro extracts information from the profile that follows the profile determined by the ENTITY and CLASS keywords. From that next profile, RACF extracts the fields specified in the FIELDS keyword from the segment specified by the SEGMENT keyword. In addition, RACF returns the name of the profile from which it extracted the data.

TYPE=REPLACE
specifies the function to be performed by the EXTRACT function routine.

Note: If you specify TYPE=REPLACE, do not specify ENCRYPT=.

Use of the REPLACE option to update a profile requires a thorough knowledge of the interrelationships of fields within a profile and of the potential relationships between profiles. For instance, if you use RACXTRT to update a password, you should also update the password change date and password history information.

If you specify TYPE=REPLACE, RACF takes the information in the fields specified in the FIELDS parameter and pointed to by SEGDATA, and places that information in the designated SEGMENT. (The SEGMENT is within the profile determined by the ENTITY and CLASS keywords.) If you specify TYPE=REPLACE, you must specify FIELDS, SEGDATA=, and RELEASE=1.8 or later. If you want to replace a segment other than the base segment, you must specify the SEGMENT keyword with the segment you want. If you do not specify SEGMENT, the segment defaults to the base segment.

With 1.8 and later, if you want to create a TSO segment, you can do so by specifying the RACXTRT macro in the following way:

```
TYPE=REPLACE  SEGMENT=TSO
```

,SUBPOOL=*subpool number*
specifies the storage subpool from which the extract-function routine obtains an area needed for the extraction. If this parameter is not specified, it defaults to 229.

Note: Care should be taken in selecting a subpool. Selecting a fetch-protected subpool or subpool 0 might result in programs being unable to access or free retrieved data.

,DERIVE=YES
specifies that the desired field is obtained from the DFP segment of the appropriate profile. To specify DERIVE, you must also specify RELEASE=1.8.1.

DERIVE requests are limited to the DFP segment of the data set and user profiles. The following is an explanation of the DERIVE processing for both DATASET and USER requests.

- DATASET

  Specifying the DERIVE=YES keyword with CLASS=DATASET and FIELDS=RESOWNER causes RACF to perform additional processing, other than simply extracting the data set resource owner from the data set profile.

  DFP uses this retrieved information for authority checking when allocating a new data set.

  To process the request, RACF first attempts to extract the RESOWNER field from the DATASET profile specified by the ENTITY keyword. If the profile exists and the RESOWNER field contains data, RACF checks to see whether that data is the user ID of a USER or GROUP currently defined to RACF. If

so, RACF returns that user ID along with a reason code that indicates whether the user ID is that of a USER or GROUP.

If RACF does not find a profile that matches the data set name specified by the ENTITY keyword, RACF attempts to locate the generic data set profile that protects that data set name.

If it finds the generic profile, and the RESOWNER field contains data, RACF checks to see whether that data is the user ID of a USER or GROUP currently defined to RACF. If so, RACF returns that user ID along with a reason code that indicates whether the user ID is that of a USER or GROUP.

If RACF does not find a generic profile or the retrieved data is neither a USER nor a GROUP, RACF returns the high-level qualifier from the name specified on the ENTITY keyword, along with a reason code that indicates whether that high-level qualifier matches a defined USER or GROUP, or neither.

You specify a DERIVE request for RESOWNER as follows:

```
RACROUTE REQUEST=EXTRACT,TYPE=EXTRACT,
ENTITY=DSNAME,
VOLSER=MYDASD,
CLASS='DATASET',
FIELDS=RESFLDS,
SEGMENT='DFP',
DERIVE=YES,
RELEASE=1.8.1
..........
DSNAME   DC CL44'USER1.DATASET'
MYDASD   DC CL6'DASD1'
RESFLDS  DC A(1)
         DC CL8'RESOWNER'
```

Note: You must specify all the keywords in the example, for the DERIVE request to work.

- User

  The purpose of specifying the DERIVE=YES keyword with CLASS=USER is to obtain the desired DFP-field information (STORCLAS or MGMTCLAS) from the profile of the user. If the user's profile does not contain the desired DFP fields, RACF goes to the user's default group and attempts to obtain the information for the remaining fields from the GROUP profile (the remaining fields being those that do not contain information in the USER profile).

  You specify a DERIVE request for information from a USER profile as follows:

```
RACROUTE REQUEST=EXTRACT,TYPE=EXTRACT,
ENTITY=USER01,
CLASS='USER',
FIELDS=STRFLDS,
SEGMENT='DFP',
DERIVE=YES,
RELEASE=1.8.1
.........
USER01   DC CL8'USER01'
STRFLDS  DC A(1)
         DC CL8'STORCLAS'
```

RACF processes the DERIVE keyword only if it is specified with the DATASET or USER class. In addition, for DERIVE processing to occur, SEGMENT=DFP and RELEASE=1.8.1 must also be specified.

,FIELDS=*address*

Specifies the address of a variable-length list. The first field is a 4-byte field that

contains the number of profile-field names in the list that follows. Each profile-field name is 8 bytes long, left-justified, and padded to the right with blanks. The allowable field names for each type of profile are in the template listings in Appendix B, “RACF database templates” on page 355. To see how to specify the FIELDS keyword, see the TYPE=REPLACE example that follows.

- If you specify RELEASE=1.6 or later, or allow the keyword to default, the following options exist:
  - The only acceptable value of the count field is 1.
  - The only acceptable field name is PASSWORD. Use this parameter when you want to extract the user’s encoded password in addition to the user ID and connect group. RACF returns the encoded password in the result area at an offset from the start of the area specified by the halfword at offset 4. (See the result area under TYPE=EXTRACT.)
- If you specify RELEASE=1.8 or later, the following options exist:
  - The count field can contain numbers from 1 through 255.
  - The field names can be any of the field names in the template listings.

If you specify TYPE=EXTRACT or EXTRACTN, RACF retrieves the contents of the named fields from the RACF profile indicated by the CLASS= and ENTITY= parameters, and returns the contents in the result area. (See result area explained under the EXTRACT keyword.)

With Release 1.8, you can specify TYPE=REPLACE. RACF replaces or creates the indicated fields in the profile specified on the CLASS and ENTITY keywords with the data pointed to by the SEGDATA keyword.

Notes:

1. Do not replace a repeat group count field. Doing so causes unpredictable results.
2. You cannot replace an entire repeat group, a single occurrence of a repeat group, or a single existing field in a repeat group. If you attempt to do so, RACF adds the data to the existing repeat group or groups.

   The only things you can do is retrieve all occurrences of specified fields within a repeat group or add a new occurrence of a repeat group.
3. If you add occurrences of a repeat group, RACF places those additions at the beginning (front) of the repeat group.

The following example of TYPE=REPLACE replaces fields in the base segment. It shows one way to code the macro and the declarations necessary to make the macro work.

```
RACXTRT  TYPE=REPLACE,
         CLASS='USER',
         ENTITY=USERID,
         FIELDS=FLDLIST,
         SEGDATA=SEGDLIST,
         SEGMENT=BASE

 ...............................

 USERID   DC  CL8,'BILL'
 FLDLIST  DC  A(3)
          DC  CL8'AUTHOR'
          DC  CL8'DFLTGRP'
          DC  CL8'NAME'
```

```
SEGDLIST DC  AL4(6),CL6'JSMITH'
         DC  AL4(8),CL8'SECURITY'
         DC  AL4(11),CL11'BILL THOMAS'
BASE     DC  CL8'BASE'
```

When the replacement action takes place, the following occurs:
- JSMITH is placed in the AUTHOR field in the profile.
- SECURITY is placed in the DFLTGRP field in the profile.
- BILL THOMAS is placed in the NAME field in the profile.

The following example of TYPE=EXTRACT retrieves the universal access from a fully-qualified generic data set profile. The information is retrieved in a work area created in SUBPOOL 1.

```
 RACXTRT    TYPE=EXTRACT,
            CLASS='DATASET',
            ENTITY=DSN,
            FIELDS=FLDS,
            GENERIC=YES,
            SUBPOOL=1
            RELEASE=1.8,
            SEGMENT='TSO'
...................
DSN  DC  CL44'SYS1.LINKLIB'
FLDS DC  A(1)
     DC  CL8 'UACC'
```

TYPE=ENCRYPT
specifies the function to be performed by the extract-function routine.

If TYPE=ENCRYPT is specified, the operation performed is data encoding. The ENCRYPT keyword specifies the data to be encoded and the encoding method used. The first eight bytes of the area pointed to by the ENTITY operand are used by the data encryption standard (DES) encoding routine. If ENTITY is not specified, the user ID from the current ACEE is used instead. If TYPE=ENCRYPT is specified, no work area is returned.

,ENCRYPT=(*data address***,DES)**
,ENCRYPT=(*data address***,HASH)**
,ENCRYPT=(*data address***,INST)**
specifies the data to be authenticated, and a method of authentication. The address points to a 1-byte length field followed by 1 to 255 bytes of clear-text data to be used as the user-authentication key. The second subparameter specifies the authentication method: the RACF data encryption standard algorithm, the RACF hashing algorithm, or whatever scheme the installation uses (INST value). Upon return to the macro issuer, the first subparameter contains the address of an area that contains a 1-byte length followed by the encoded version of the data. Neither the address itself nor the length is changed.

Note: When the DES algorithm is used, RACF actually encrypts the data pointed to by the ENTITY profile or by the user ID, using the data as the encryption key. Data is one-way encrypted, that is, no facility is provided to recover the data in readable form. If HASH is specified, the RACF hashing algorithm is used and data is masked instead of encrypted.

,ENTITY=*resource name address*
specifies the address of an area containing the resource name. The resource name is a 44-byte DASD data set name for CLASS=‘DATASET’, an 8-byte area containing the user ID for CLASS=‘USER’, an 8-byte area containing the group name for CLASS=‘GROUP’, or a 17-byte area for CLASS=‘CONNECT’. The

length of all other resource names is determined from the class descriptor table. The name must be left-justified in the field and padded with blanks. For CLASS='USER', the user ID from the current ACEE or the ACEE specified for ACEE= is used if ENTITY= is not specified.

,ACEE=*acee address*
specifies an alternate ACEE for RACF to use rather than the current ACEE. For example, if the ENTITY parameter has not been specified, RACF refers to the ACEE during extract processing of user data. If you want to use the ACEE parameter, you must specify RELEASE=1.8 or later.

,VOLSER=*vol-address* **(valid only with ,CLASS='DATASET')**
specifies the volume serial as follows:

- For MVS/VSAM DASD data sets and tape data sets, specifies the volume serial number of the catalog controlling the data set.
- For non-VSAM DASD data sets and tape data sets, specifies the volume serial number of the volume on which the data set resides.

The field pointed to by the *vol-address* variable contains the volume serial number. If necessary, you must pad it to the right with blanks so it contain six characters.

If you specify VOLSER, you must specify RELEASE=1.8 or later.

,GENERIC=ASIS|YES
When CLASS is DATASET, specifies whether RACF is to treat the entity name as a generic profile name.

- If you specify GENERIC=YES, RACF considers the entity name a generic profile name, even if it does not contain any of the generic characters (an asterisk or a percent sign).
- If you specify GENERIC=ASIS, RACF considers the entity name a generic only if it contains one or both of the generic characters.

If you specify GENERIC, you must specify RELEASE=1.8 or later.

,FLDACC=NO|YES
specifies whether field-level access checking should be performed. If you specify FLDACC=YES, the RACF database manager checks to see that the user running your program has the authority to extract or modify the fields that are specified in the RACXTRT macro.

Notes:

1. For field-level access checking to occur, you must specify RELEASE=1.8 or later when you code the macro. In addition, before the program executes, the security administrator must activate and RACLIST the FIELD class using the SETROPTS command. If you code FLDACC=YES and the FIELD class is not active and RACLISTed, the request is failed with a return code 8, reason code 4.
2. In addition, the security administrator must issue the RDEFINE and PERMIT commands to designate those users who have the authority to access the fields designated in the RACXTRT macro.
3. If you specify FLDACC=NO or omit the parameter, the manager ignores field-level access checking.

,CLASS='*class name***'**
,CLASS=*class name addr*
specifies the class the entity is in. The class name can be USER, GROUP,

CONNECT, DATASET, or any general-resource class defined in the class descriptor table. If you specify CLASS, you must specify RELEASE=1.8 or later.

,SEGMENT=‘*segment name***’**
,SEGMENT=*segment name address*
specifies the RACF profile segment that RACF is to update or from which it is to extract data. If you specify SEGMENT, you must also specify the CLASS and FIELDS keywords, and RELEASE=1.8 or a later release number. If you allow the SEGMENT parameter to default, RACF assumes that you want to extract information from the base segment.

,SEGDATA=*segment data addr*
specifies the address of a list of data items to be placed in the fields named by the FIELDS= parameter. You use the SEGDATA parameter when you specify TYPE=REPLACE. If you specify SEGDATA, you must also specify CLASS, FIELDS, and RELEASE=1.8 or a later release number. The stored data is paired in the following format:
- A 4-byte length field that contains the length of the data field that follows
- A data field of variable length.

Each length field is followed immediately by a data field until you reach the end of the replacement data. The count field, which is pointed to by the first field in the FIELDS parameter, contains the total number of length-data pairs.

Parameters for RELEASE=1.6 through 1.8.1

The RELEASE values for which a specific parameter is valid are marked with an ‘X’. RELEASE=1.6 is the default.

Table 21. RACXTRT Parameters for RELEASE=1.6 through 1.8.1

Parameter	RELEASE=1.6	RELEASE=1.7	RELEASE=1.8 or 1.8.1
ACEE=			X
CLASS=			X
DERIVE=YES			X
ENCRYPT=	X	X	X
ENTITY=	X	X	X
EXTRACT=	X	X	X
EXTRACTN=			X
FLDACC=			X
FIELDS=	X	X	X
GENERIC=			X
RELEASE=	X	X	X
REPLACE=			X
SEGDATA=			X
SEGMENT=			X
SUBPOOL=	X	X	X
TYPE=	X	X	X
VOLSER=			X

Return codes and reason codes

If the return codes and reason codes you are receiving are not discussed in this macro, refer to the return codes and reason codes described in RACROUTE REQUEST=EXTRACT “Return codes and reason codes” on page 120.

When control is returned, register 15 contains one of the following return codes, and register 0 can contain a reason code.

Hex Code	Meaning
00	The extraction or encoding completed successfully.

Reason Code	For Derive Requests
0	Some of the values are derived from the USER profile, and some might be derived from the GROUP profile.
4	High-level qualifier returned as RESOWNER. It matched a valid USER.
8	DFP data returned from an EXTRACT request from USER profile was actually from the user’s default connect group.
0C	High-level qualifier returned as RESOWNER. It matched a valid GROUP.
24	RESOWNER field matched a valid USER.
28	RESOWNER field matched a valid GROUP.
2C	At least one, but not all, of the fields requested failed to be retrieved because of field level access checking.

04	An ESTAE environment was not able to be established, or if register 0 contains a reason code of 1, neither EXTRACT nor ENCRYPT was specified for TYPE=.
08	For TYPE=EXTRACT, TYPE=EXTRACTN, or TYPE=REPLACE the profile could not be found. The hexadecimal reason codes are:

Reason Code	For Derive Requests
0	No profile found.
4	Field-level access checking failed. The FIELD class might not be active and RACLISTed.
8	Segment not found.
14	Neither the RESOWNER field nor the high-level qualifier matched a valid USER or GROUP.

C	RACF is inactive.
10	The extract operation failed. Register 0 contains the RACF-manager return code that represents the cause of termination. This return code is not used for the encoding function. The manager return code and reason codes are returned in the low-order and high-order halfwords of register 0.

14 For TYPE=ENCRYPT or TYPE=EXTRACT of user-class data, ENTITY was specified and no ACEE exists, or the ACEE was not for a defined user.

Reason Code	For Derive Requests
0	No ACEE exists.
4	ACEERACF bit is off.

18 A parameter-list error was encountered. The hexadecimal reason codes are:

Reason Code	For Derive Requests
4	For TYPE=REPLACE request, FIELDS= was not specified.
8	Type specified is not valid
C	Number of fields not valid.
10	Class name specified is not valid.
14	Version in parameter list is not valid.
18	Subpool specified is not valid.
1C	Parameter length not valid.
20	For TYPE=REPLACE request, SEGDATA= was not specified.
24	Entity name specified is not valid.
2C	For TYPE=ENCRYPT request, no user-authentication key was specified.
30	Encoding method is not valid.
34	ENTITY= was not specified with TYPE=REPLACE, TYPE=EXTRACTN, or TYPE=EXTRACT with class other than USER.
38	Multiple profiles; no volume specified.
3C	Profile found wrong volume serial number specified.
48	Entity-name length with the ENTITY keyword not valid: • The specified length is one of the following: – Greater than 44 if CLASS=DATASET – Greater than 8 if CLASS=USER or GROUP – Greater than 17 if CLASS=CONNECT – Greater than the maximum for the specified class as defined in the class descriptor table. • For TYPE=ENCRYPT request, the specified length is not zero or eight.
50	The entity name contains a blank at the beginning or in the middle of the name.

64 Indicates that the CHECK subparameter of the RELEASE keyword was specified on the execute form of the RACXTRT macro; however, the list form of the macro does not have the proper

RELEASE parameter. It also indicates that the TYPE parameters specified on the list and execute forms might not be the same TYPE. Macro processing terminates.

RACXTRT (list form)

The list form of the RACXTRT macro is written as follows:

name	*name*: Symbol. Begin *name* in column 1.
b	One or more blanks must precede RACXTRT.
RACXTRT	
b	One or more blanks must follow RACXTRT.

TYPE=EXTRACT
TYPE=EXTRACTN
TYPE=REPLACE
TYPE=ENCRYPT

,ENTITY=*resource name addr*	*resource name addr*: A-type address
,ACEE=*acee-address*	*acee*: A-type address
,VOLSER=*volser-address*	*vol address*: A-type address
,GENERIC=ASIS ,GENERIC=YES	**Default:** ASIS
,FLDACC=YES ,FLDACC=NO	**Default:** NO

,MF=L

If TYPE=EXTRACT or EXTRACTN is specified:

,SUBPOOL=*subpool number*	*subpool number*: Decimal digit 0–255 **Default:** SUBPOOL=229
,DERIVE=*YES*	See explanation of keyword. **Default:** Normal processing
,CLASS=*'class name'* ,CLASS=*class name addr*	*class name*: 1–8 character class name *class name addr*: A-type address **Default**: CLASS='USER'
,SEGMENT=*'segment*	*segment name*: 1–8 character name

name'	
,SEGMENT=*segment name addr*	*segment name addr*: A-type address
,FIELDS=*field addr*	*field addr*: A-type address

If TYPE=REPLACE is specified:

,CLASS=*'class name',*	*class name*: 1–8 character class name
,CLASS=*class name addr*	*class name addr*: Rx-type address or Register (2) - (12) **Default:** CLASS='USER'
,SEGMENT=*'segment name'*	*segment name*: 1–8 character name
,SEGMENT=*segment name addr*	*segment name addr*: A-type address
,FIELDS=*field addr*	*field addr*: A-type address
,SEGDATA=*segment data addr*	*segment data addr*: A-type address

If TYPE=ENCRYPT is specified:

,ENCRYPT=*(data address,DES*) ,ENCRYPT=(*data address,HASH*) ,ENCRYPT=(*data address,INST*)	*data address*: A-type address

The parameters are explained under the standard form of the RACXTRT macro with the following exception:

,MF=L
specifies the list form of the RACXTRT macro.

RACXTRT (execute form)

The execute form of the RACXTRT macro is written as follows:

name	*name*: Symbol. Begin *name* in column 1.
b	One or more blanks must precede RACXTRT.
RACXTRT	
b	One or more blanks must follow RACXTRT.

TYPE=EXTRACT
TYPE=ENCRYPT

,ENTITY=*resource name addr*	*resource name addr*: Rx-type address or register (2)-(12)
,RELEASE=*number* ,RELEASE=(,CHECK) ,RELEASE= *(number,*CHECK)	*number*: 1.8.1, 1.8, 1.7, or 1.6 **Default:** RELEASE=1.6
,ACEE=*acee-address*	*acee*: Rx-type address or register (2) - (12)
,VOLSER=*volser-address*	*vol address*: Rx-type address or register (2) - (12)
,GENERIC=ASIS ,GENERIC=YES	
,FLDACC=YES FLDACC=NO	
,MF=(E,*ctrl addr*)	ctrl addr: Rx-type address, register (1) or register (2) - (12)

If TYPE=EXTRACT or EXTRACTN is specified:

,SUBPOOL=*subpool number*	*subpool number*: Decimal digit 0–255
,DERIVE=*YES*	See explanation of keyword.
,CLASS=*class name addr*	*class name addr*: Rx-type address or register (2) - (12)
,SEGMENT=*segment name addr*	*segment name addr*: Rx-type address or register (2) - (12)
,FIELDS=*field addr*	*field addr*: Rx-type address or register (2) - (12)

If TYPE=REPLACE is specified:

,CLASS=*class name addr*	*class name addr*: Rx-type address or Register (2) - (12)
,SEGMENT=*segment name addr*	*segment name addr*: Rx-type address or register (2) - (12)
,FIELDS=*field addr*	*field addr*: Rx-type address or register (2) - (12)
,SEGDATA=*segment data addr*	*segment data addr*: Rx-type address or register (2) - (12)

If TYPE=ENCRYPT is specified:

,ENCRYPT=(*data address,DES*) ,ENCRYPT=(*data address,HASH*) ,ENCRYPT=(*data address,INST*)	*data address*: Rx-type address or register (2) - (12)

The parameters are explained under the standard form of the RACXTRT macro with the following exceptions:

,RELEASE=*number*
,RELEASE=(,CHECK)
,RELEASE=(*number***,CHECK)**
specifies the RACF release level of the parameter list to be generated by this macro.

Certain parameters can be specified only with particular releases. If you specify a parameter with an incompatible release level, the parameter is not accepted by the macro processing. An error message is issued at assembly time. For the parameters that are valid for RELEASE=1.6 and later, see Table 21 on page 347.

When you specify the RELEASE keyword, checking is done at assembly time. Compatibility between the list and execute forms of the RACXTRT macro is validated at execution time if you specify the CHECK subparameter on the execute form of the macro.

The size of the list form expansion must be large enough to accommodate all parameters defined by the RELEASE keyword on the execute form of the macro. Otherwise, when CHECK processing is requested, the execute form of the macro is not done, and a return code of X'64' is returned.

The default is RELEASE=1.6.

,MF=(E,*ctrl addr***)**
specifies the execute form of the RACXTRT macro, using a remote, control-program parameter list.

Appendix B. RACF database templates

Included in this appendix are the following templates:
1. GROUP
2. USER
3. CONNECT
4. DATA SET
5. GENERAL
6. RESERVED

Attention

Do not modify the RACF database templates (SYS1.MODGEN(IRRTEMP1)). Such modification is not supported by IBM and may result in damage to your RACF database or other unpredictable results.

Segment Fields:

1. The first field in a segment of a template cannot be retrieved or updated. This field has a Field ID of 001 and is usually described in the **'Field Being Described'** column as 'Start of segment fields'.
2. The TME segment fields are intended to be updated by Tivoli applications, which manage updates, permissions, and cross references among the fields. The TME fields should only be directly updated on an exception basis. See *z/OS Security Server RACF Command Language Reference* for formats of the field data as enforced by the RACF commands. Use caution when directly updating TME fields, as the updates may be overridden by subsequent actions of Tivoli applications.

Format of field definitions

The RACF database templates contain a definition for each field in the profile.

Each field definition contains information about the field in the following format:

Field Name (Character Data)	Field ID	Flag 1	Flag 2	Field Length Decimal	Default Value Type

Field Name		Character data.
Field ID		Reference number.
Flag 1 field		The bits have the following meanings when they are turned on:
	Bit 0:	The field is a member of a repeat group.
	Bit 1:	The definition describes a combination field.
	Bit 2:	The field is a flag byte.
	Bit 3:	The field contains the count of members in the repeat group following this field.
	Bit 4:	The definition describes a combination field continued in next entry.
	Bit 5:	The field (for example, PASSWORD) is masked.
	Bit 6:	The field is sorted in ascending order.
	Bit 7:	The field is a statistical field. A value is always stored for this field, even when it is equal to the defined null value for the field.

© Copyright IBM Corp. 1994, 2002

Flag 2		The bits have the following meanings when they are turned on:
	Bit 0:	Changes to this field affect security and cause ACEEs to be purged from VLF.
	Bit 1:	The field is padded on the left with binary zeros when values shorter than the field length are retrieved.
	Bit 2:	This field represents a 3-byte date field.
	Bit 3:	This field is an Application Identity Mapping alias name.
	Bit 4:	This field is not to be unloaded by the Database Unload utility (IRRDBU00).
	Bits 5-7:	Reserved for IBM's use.
Field Length		Field length on return from ICHEINTY or RACROUTE REQUEST=EXTRACT (0 is variable length).
Default Value		Field default. If the field is not present in the profile, this byte is propagated throughout the returned field as the default value.
Type		Data type of each field. In this column, character is represented as 'Char', integer is represented as 'Int', and binary is represented as 'Bin'. 'Date' and 'Time' are also possible data types. The type of a combination field that represents a single field is the same as that single field. There is no ″type″ associated with a combination field which represents multiple fields.

Repeat groups on the RACF database

A repeat group consists of one or more sequential fields within a profile that are able to be repeated within that profile. A field that belongs to a repeat group is only defined once in the template, but can be repeated as many times as necessary within the actual profile. A count field precedes the repeat group in the profile indicating how many of these groups follow.

If a field in a profile has a fixed length, a value (less than 255) in the field definition within the template specifies its actual length. If a field in a profile has a variable length, the value in the field definition is 0. In both cases, the actual field length is contained in the physical data mapped by the field definition.

Data field types

RACF stores information in the RACF database in many different formats. This section identifies the major data types that RACF stores. Exceptions and additional detail can be found in the description of each specific field within the templates.

Date fields

The format of the 3-byte date fields is *yydddF*, which represents a packed decimal number in which *y* represents year, *d* represents day, and *F* represents the sign. Examples of RACF date values are X'98111C' and X'94099D'.

The format of the 4-byte date fields should be *yyyymmdd*, which represents a packed decimal number in which *y* represents year, *m* represents month, and *d* represents day. Examples of RACF date values are X'19980421' and X'19940409'.

RACF might use any of the following values for null dates: X'FFFFFF', X'00000D', X'00000C', and X'000000' for 3-byte addresses, and X'FFFFFFFF', X'0000000D', X'0000000C', and X'00000000' for 4-byte addresses. However, you should always set null dates to either X'00000F' for 3-byte addresses and X'0000000F' for 4-byte addresses.

Time fields

The format for the 4-byte time fields are *hhmmsstc* where *h* represents hours, *m* represents minutes, *s* represents seconds, *t* represents tenths of seconds, and *c* represents hundredths of seconds. There is no sign byte. For information on the 8-byte version, see the TIME macro as documented in *z/OS MVS Programming: Assembler Services Reference IAR-XCT*.

Integer fields

Integers are stored as unsigned binary values. These values can be 1, 2, or 4 bytes in length.

Character fields

Character fields are padded with blanks to the right.

Combination fields on the RACF database

The database templates also contain definitions called *combination fields.*

Combination fields do not describe a field of a profile. They contain the field numbers that identify the respective field definitions. You can use a combination as an alias to access multiple fields with one ICHEACTN or RACROUTE REQUEST=EXTRACT macro. For more information, see ″Example 2: Adding a user ID to a data set access list″, in Appendix A of *z/OS Security Server RACF Macros and Interfaces*.

In addition, you can use the combination field to provide aliases for individual fields.

The format of a combination field definition is different from a non-combination definition. Its format is as follows:

Field Name	Character data.
Field ID	Reference number.
Flag 1	The hex representation of the flag bits for this field. For combination fields, bit 1 is on. For a continuation of combination fields, bit 4 is also on.
Flag 2	The hex representation of the flag bits for this field. For combination fields, all bits are off.
Combination IDs	If nonzero, combination IDs represent the position of a non-combination field within the template segment. There can be up to 5 field IDs representing the template fields that comprise this combination field.
Type	Data type of each field. In this column, character is represented as ’Char’, integer is represented as ’Int’, and binary is represented as ’Bin’. ’Date’ and ’Time’ are also possible data types.
Comments	Comment field.

Determining space requirements for the profiles

The formula for calculating the space required for each segment (Base RACF information, TSO, DFP, and so on) of each profile in the RACF database is as follows:

```
P = 20 + L + F1 + F4 + R
```

Where:

P **=** The number of bytes required for a profile segment

Database templates

L = The number of bytes in the profile name

F1 = The sum of the lengths of all fields that contain data and have a length of 1 to 127 bytes, plus 2 bytes for every field counted.

For example, if a segment contains 3 non-null fields of length `8`, `F1 = (3 * 8) + (3 * 2) = 24 + 6 = 30`.

F4 = The sum of the lengths of all fields that contain data and have a length of 128 to 2**31 bytes, plus 5 bytes for every field counted.

For example, if a segment contains a non-null field 150 bytes long and a non-null field 255 bytes long, `F4 = 150 + 255 + (2 * 5) = 150 + 255 + 10 = 415`

R = The sum of the lengths of all repeat groups. If a repeat group has no occurrences, then it has a length of 0 bytes. If a repeat group has 1 or more occurrences, then the length of each repeat group is calculated as follows:

```
9 + N + G1 + G4
```

N = The number of occurrences of the group

G1 = The sum of the lengths of all fields in the group, which have a length of 1 to 127 bytes, plus 1 byte for every field counted. If a field has a length of zero, it will still take up 1 byte in the profile.

G4 = The sum of the lengths of all fields in the group, which have a length of 128 to 2**31 bytes, plus 4 bytes for every field counted.

For example, consider a group with two occurrences. Each occurrence contains an 8-byte field and a variable length field. In the first occurrence, the variable length field is 30 bytes and in second occurrence, it is 200 bytes. The length of the group is:

```
9 + 2 + G1 + G4
```

G1 is `(8 + 1) + (30 + 1)` from the first occurrence and `(8 + 1)` from the second, for a total of 49 bytes. G4 is `(200 + 4)` from the second occurrence, or 204 bytes. So, the length of the group is `9 + 2 + 49 + 204`, or 264 bytes.

Note: For each repeat group (except CGGRPCT in the USER profile), the amount of data may not exceed 65535 bytes to ensure proper processing by programs retrieving the data using ICHEINTY with DATAMAP=OLD. To calculate the amount of data to determine whether it will fit within this limit, examine the template definitions for the repeat group and the data for that repeat group contained within the profile. For each fixed length field in each occurrence of the repeat group add the length of the field as shown in its template definition. For each variable length field in each occurrence of the repeat group add the length of the data in the field plus one. When you are done, the total cannot exceed 65535.

For example, this would translate into a maximum of 8191 group connections per user, based on the CONGRPCT repeat group in the USER template. This group contains one 8-byte field, making the calculation of the limit a simple one of dividing 65535 by 8 and dropping any remainder.

As another example, this would translate into a maximum of 5957 users connected to a group, based on the ACLCNT repeat group in the GROUP template. This group contains one 8-byte field (USERID), one 1-byte field (USERACS), and one 2-byte field (ACSCNT). This gives a total length of eleven for the fixed-length fields in each occurrence. Dividing 65535 by 11 and dropping the remainder gives the limit of 5957.

When calculating F1 and F4, remember that statistical fields (Flag1/bit 7 on, in the template definition) are always stored in a profile segment, even when the field contains a null value. For example, LJTIME will always add 3 bytes to the length of a USER profile Base segment, regardless of whether it contains a zero value or some other value. Other fields will only exist in the segment if a specific value has been added for that field.

Note: The RACF database space required for a segment is a multiple of the 256-byte slots required to contain the segment. For example, if a USER profile Base segment contains 188 bytes of data, it will still require 256 bytes of space in the RACF database.

Determining space requirements for alias index entries

An exact formula for calculating the space required for alias entries cannot be derived due to index block compression, and the mechanics of the higher level index blocks. The following is an approximate formula for space taken up in the alias index block sequence set (level 1) by an index entry:

```
AIE = 16 + (N * (2 + BPL)) + AKL
```

Where:

AIE = Alias index entry length

N = The number of base profile names. Most aliases are only allowed 1 base profile association.

BPL = Base profile name length. The base profile is named in the alias index entry. Because the base profile is a user or group profile, valid BPL values are between 1 and 8.

AKL = Alias index entry, key length. The first 3 bytes are template number, segment number, and field number. Additional bytes of the alias index key are taken up by the alias value. These lengths vary according to each alias field.

Group template for the RACF database

The group template describes the fields of group profiles in the RACF database.

NOT programming interface information

ACSCNT	FLDNAME
FIELD	FLDVALUE
FLDCNT	INITCNT
FLDFLAG	

End of NOT programming interface information

Notes:

1. Application developers should not depend on being able to use RACROUTE REQUEST=EXTRACT for the BASE segment fields on any security product other than RACF. These products are expected to support only such segments as DFP and TSO.
2. The TME segment fields are intended to be updated by the Tivoli applications, which manage updates, permissions, and cross references among the fields. The TME fields should only be directly updated on an exception basis. See *z/OS Security Server RACF Command Language Reference* for formats of the

field data as enforced by the RACF commands. Use caution when directly updating TME fields, as the updates might be overridden by subsequent actions of Tivoli applications.

The contents of the group template are as follows:

Template Field Name (Character Data)	Field ID	Flag 1	Flag 2	Field Length Decimal	Default Value	Type	Field Being Described
The following is the BASE segment of the GROUP template.							
GROUP	001	00	00	00000000	00		
ENTYPE	002	00	00	00000001	01	Int	The number (1) corresponding to group profiles.
VERSION	003	00	00	00000001	01	Int	The version field from the profile. Always X'01'.
SUPGROUP	004	00	80	00000008	FF	Char	The superior group to this group.
AUTHDATE	005	00	20	00000003	FF	Date	The date the group was created.
AUTHOR	006	00	80	00000008	FF	Char	The owner (user ID or group name) of the group.
INITCNT	007	00	00	00000002	FF		Reserved for IBM's use.
UACC	008	20	00	00000001	00	Bin	The universal group authority. (The authority of a user to the group if the user is not connected to the group.) **Bit** **Meaning When Set** **0** JOIN authority **1** CONNECT authority **2** CREATE authority **3** USE authority **4-7** Reserved for IBM's use **Note:** This field has a value of X'00', except for group VSAMDSET, where the value is X'20'.
NOTRMUAC	009	20	00	00000001	00	Bin	If bit 0 is on, the user must be specifically authorized (by the PERMIT command) to use the terminal. If off, RACF uses the terminal's UACC.
INSTDATA	010	00	00	00000000	00	Char	Installation data.
MODELNAM	011	00	00	00000000	00	Char	Data set model profile name. The profile name begins with the second qualifier; the high-level qualifier is not stored.
FLDCNT	012	10	00	00000004	00		Reserved for IBM's use.
FLDNAME	013	80	00	00000008	00		Reserved for IBM's use.
FLDVALUE	014	80	00	00000000	00		Reserved for IBM's use.
FLDFLAG	015	A0	00	00000001	00		Reserved for IBM's use.
SUBGRPCT	016	10	00	00000004	00	Int	The number of subgroups of the group.
SUBGRPNM	017	80	80	00000008	00	Char	A list of the subgroup names.
ACLCNT	018	10	00	00000004	00	Int	The number of users connected to the group.
USERID	019	80	00	00000008	00	Char	The user ID of each user connected to the group.
USERACS	020	A0	00	00000001	00	Bin	The group authority of each user connected to the group. **Bit** **Meaning When Set** **0** JOIN authority **1** CONNECT authority **2** CREATE authority **3** USE authority **4-7** Reserved for IBM's use
ACSCNT	021	80	00	00000002	00		Reserved for IBM's use.

Template Field Name (Character Data)	Field ID	Flag 1	Flag 2	Field Length Decimal	Default Value	Type	Field Being Described
USRCNT	022	10	00	00000004	00	Int	Reserved for installation's use. See **Note 1.**
USRNM	023	80	00	00000008	00		Reserved for installation's use. See **Note 1.**
USRDATA	024	80	00	00000000	00		Reserved for installation's use. See **Note 1.**
USRFLG	025	A0	00	00000001	00		Reserved for installation's use. See **Note 1.**
UNVFLG	026	20	00	00000001	00	Bin	Identifies the group as having (bit 0 is on) or not having the UNIVERSAL attribute.

Note 1: Intended usage for these fields is to allow the installation to store additional data in this profile. USRNM should have a field name to use as a key to identify each unique occurrence of a row in the repeat group. USRDATA and USRFLG hold the data associated with that name. For more information, see ″Example 5: Updating the installation fields″, in Appendix A of *z/OS Security Server RACF Macros and Interfaces*.

Field Name	Field ID	Flag 1	Flag 2	Combination Field IDs					Type	
The following are the COMBINATION fields.										
DEFDATE	000	40	00	005	000	000	000	000	Char	Alias for AUTHDATE
CREADATE	000	40	00	005	000	000	000	000	Char	Alias for AUTHDATE
OWNER	000	40	00	006	000	000	000	000	Char	Alias for AUTHOR
FIELD	000	40	00	013	014	015	000	000		FLDNAME, FLDVALUE, and FLDFLAG
ACL	000	40	00	019	020	021	000	000		USERID, USERACS, and ACSCNT
USERDATA	000	40	00	023	024	025	000	000		USERNM, USERDATA, and USERFLG

Template Field Name (Character Data)	Field ID	Flag 1	Flag 2	Field Length Decimal	Default Value	Type	Field Being Described
The following is the DFP Segment of the GROUP Template.							
DFP	001	00	00	00000000	00		Start of segment
DATAAPPL	002	00	00	00000000	00	Char	Data Application
DATACLAS	003	00	00	00000000	00	Char	Data Class
MGMTCLAS	004	00	00	00000000	00	Char	Management Class
STORCLAS	005	00	00	00000000	00	Char	Storage Class
The following is the OMVS Segment of the GROUP Template.							
OMVS	001	00	00	00000000	00		Start of segment
GID	002	00	10	00000004	FF	Int	GID
The following is the OVM Segment of the GROUP Template.							
OVM	001	00	00	00000000	00		Start of segment
GID	002	00	00	00000004	FF	Int	GID
The following is the TME Segment of the GROUP Template.							
TME	001	00	00	00000000	00		Start of segment fields
ROLEN	002	10	00	00000004	00	Int	Count of roles
ROLES	003	80	00	00000000	00	Char	Role names

User template for the RACF database

The user template describes the fields of the user profiles in a RACF database.

NOT programming interface information

CATEGORY	ENCTYPE	FLDVALUE	PREVKEY
CONGRPCT	FIELD	MAGSTRIP	PREVKEYV
CONGRPNM	FLDCNT	NUMCTGY	PWDCNT
CURKEY	FLDFLAG	OLDPWD	PWDGEN
CURKEYV	FLDNAME	OLDPWDNM	SALT

End of NOT programming interface information

Note: Application developers should not depend on being able to use RACROUTE REQUEST=EXTRACT for the BASE segment fields on any security product other than RACF. These products are expected to support only such segments as DFP and TSO.

The contents of the user template (base segment) are as follows:

Template Field Name (Character Data)	Field ID	Flag 1	Flag 2	Field Length Decimal	Default Value	Type	Field Being Described
The following is the BASE segment of the USER template.							
USER	001	00	00	00000000	00		
ENTYPE	002	00	00	00000001	02	Int	The number (2) corresponding to user profiles.
VERSION	003	00	00	00000001	01	Int	The version field from the profile. Always X'01'.
AUTHDATE	004	00	20	00000003	FF	Date	The date the user was defined to RACF.
AUTHOR	005	00	00	00000008	FF	Char	The owner (user ID or group name) of the user profile.
FLAG1	006	20	80	00000001	00	Bin	Identifies the user as having (bit 0 is on) or not having the ADSP attribute.
FLAG2	007	20	80	00000001	00	Bin	Identifies the user as having (bit 0 is on) or not having the SPECIAL attribute.
FLAG3	008	20	80	00000001	00	Bin	Identifies the user as having (bit 0 is on) or not having the OPERATIONS attribute.
FLAG4	009	20	80	00000001	00	Bin	Identifies the user as having (bit 0 is on) or not having the REVOKE attribute.
FLAG5	010	20	80	00000001	00	Bin	Identifies the user as having (bit 0 is on) or not having the GRPACC attribute.
PASSINT	011	00	80	00000001	FF	Int	The interval in days (represented by a number between 1 and 254) that the user's password is in effect. If it is X'FF', the user's password never expires. See the description of the SETR PASSWORD(INTERVAL...)) processing instructions in *z/OS Security Server RACF Command Language Reference* for more details.
PASSWORD	012	04	80	00000008	FF	Char	The password associated with the user. For masking, the masked password is stored. For DES, the encrypted user ID is stored. If the installation provides its own password authentication, data returned by the ICHDEX01 exit is stored.
PASSDATE	013	00	20	00000003	FF	Date	The date the password was last changed.
PGMRNAME	014	00	00	00000020	FF	Char	The name of the user.

Template Field Name (Character Data)	Field ID	Flag 1	Flag 2	Field Length Decimal	Default Value	Type	Field Being Described
DFLTGRP	015	00	00	00000008	FF	Char	The default group associated with the user. A value of X'FF' indicates that no group was specified.
LJTIME	016	01	00	00000004	FF	Time	The time that the user last entered the system by using RACROUTE REQUEST=VERIFY.
LJDATE	017	01	20	00000003	FF	Date	The date that the user last entered the system by using RACROUTE REQUEST=VERIFY.
INSTDATA	018	00	80	00000000	00	Char	Installation data.
UAUDIT	019	20	80	00000001	00	Bin	Identifies whether all RACROUTE REQUEST=AUTH, RACROUTE REQUEST=DEFINE, (and, if the caller requests logging, RACROUTE REQUEST=FASTAUTH) macros issued for the user and all RACF commands (except SEARCH, LISTDSD, LISTGRP, LISTUSER, and RLIST) issued by the user will be logged. If bit 0 is on, they are logged. If bit 0 is off, logging might still occur for other reasons, as identified in *z/OS Security Server RACF Auditor's Guide*.
FLAG6	020	20	80	00000001	00	Bin	Identifies the user as having (bit 0 is on) or not having the AUDITOR attribute.
FLAG7	021	20	80	00000001	00	Bin	If bit 0 is on, and FLAG8 has bit 0 on, an operator identification card (OID card) is needed to enter the system. If bit 1 is on, this is a protected user ID, which cannot enter the system by any means requiring a password or OID card.
FLAG8	022	20	80	00000001	00	Bin	If bit 0 is on, an operator identification card (OID card) is required when logging on to the system.
MAGSTRIP	023	04	00	00000000	00	Bin	The operator identification associated with the user from the masked or encrypted OID card data required to authenticate this user, as supplied by a supported 327x (such as 3270 and 3278) OID card reader.
PWDGEN	024	00	00	00000001	FF	Int	Current password generation number.
PWDCNT	025	10	00	00000004	00	Int	Number of old passwords present.
OLDPWDNM	026	80	00	00000001	00	Int	Generation number of previous password.
OLDPWD	027	84	00	00000008	FF	Char	Previous password. This is an encrypted password value.
REVOKECT	028	01	80	00000001	FF	Int	Count of unsuccessful password attempts. **Note:** You can use ALTER when setting this field, but you cannot use ALTERI.
MODELNAM	029	00	80	00000000	00	Char	Data set model profile name. The profile name begins with the second qualifier; the high-level qualifier is not stored.
SECLEVEL	030	00	80	00000001	FF	Int	The number that corresponds to the user's security level. For more information on security levels, see *z/OS Security Server RACF Security Administrator's Guide*.
NUMCTGY	031	10	80	00000004	00	Int	Number of security categories.
CATEGORY	032	80	80	00000002	00	Int	A number that corresponds to the security categories to which the user has access.
REVOKEDT	033	00	20	00000000	00	Date	The date the user will be revoked. This field either has length 0, or contains a 3-byte revoke date.

User Template

Template Field Name (Character Data)	Field ID	Flag 1	Flag 2	Field Length Decimal	Default Value	Type	Field Being Described
RESUMEDT	034	00	20	00000000	00	Date	The date the user will be resumed. This field either has length 0, or contains a 3-byte resume date.
LOGDAYS	035	20	00	00000001	00	Bin	The days of the week the user cannot log on (Bit 0 of this field equals Sunday, bit 1 equals Monday, and so on).
LOGTIME	036	00	80	00000000	00	Time	The time of the day the user can log on. If present (length of variable field not equal to 0), it is specified as 6 bytes formatted as two 3-byte packed decimal fields, *0ssss*C*0eeee*C, where *ssss* represents the start time (*hhmm*) from the ALU...WHEN(TIMES(...)) specification and *eeee* represents the end time. For *hhmm*, *hh* represents hours, and *mm* represents minutes.
FLDCNT	037	10	00	00000004	00		Reserved for IBM's use.
FLDNAME	038	80	00	00000008	00		Reserved for IBM's use.
FLDVALUE	039	80	00	00000000	00		Reserved for IBM's use.
FLDFLAG	040	A0	00	00000001	00		Reserved for IBM's use.
CLCNT	041	10	80	00000004	00	Int	The number of classes in which the user is allowed to define profiles.
CLNAME	042	80	80	00000008	00	Char	A class in which the user is allowed to define profiles. (The user has the CLAUTH attribute.) The user can also define profiles in any other classes with POSIT values matching these classes.
CONGRPCT	043	10	80	00000004	00	Int	The number of groups that the user is connected to.
CONGRPNM	044	80	80	00000008	00	Char	A group that the user is connected to.
USRCNT	045	10	00	00000004	00	Int	Reserved for installation's use. **Note:** Intended usage: For installation to store additional data in this profile. USRNM should have a field name to use as a key to identify each unique occurrence of a row in the repeat group. USRDATA and USRFLG hold the data associated with that name. For more information, see ″Example 5: Updating the installation fields″, in Appendix A of *z/OS Security Server RACF Macros and Interfaces*.
USRNM	046	80	80	00000008	00		
USRDATA	047	80	80	00000000	00		
USRFLG	048	A0	80	00000001	00		
SECLABEL	049	00	80	00000008	00	Char	Security label.
CGGRPCT	050	10	80	00000004	00	Int	Number of Connect Group entries. Information from the following CGxxx fields is also available through the logical connect profiles (ICHEINTY with CLASS=CONNECT) in the database. See "Connect template for the RACF database" on page 372 for more details.
CGGRPNM	051	82	80	00000008	00	Char	Connect Group Entry Name.
CGAUTHDA	052	80	A0	00000003	FF	Date	Date the user was connected.
CGAUTHOR	053	80	80	00000008	FF	Char	Owner of connect occurrence.
CGLJTIME	054	81	00	00000004	FF	Time	Time of RACROUTE REQUEST=VERIFY.
CGLJDATE	055	81	20	00000003	FF	Date	Date of RACROUTE REQUEST=VERIFY.
CGUACC	056	A0	80	00000001	00	Bin	Default universal access.
CGINITCT	057	81	00	00000002	FF	Int	Number of RACROUTE REQUEST=VERIFY requests that were successfully processed where the value specified in the CGRPNM field was the current connect group.

Template Field Name (Character Data)	Field ID	Flag 1	Flag 2	Field Length Decimal	Default Value	Type	Field Being Described
CGFLAG1	058	A0	80	00000001	00	Bin	If bit 0 is on, the user has the ADSP attribute in that group.
CGFLAG2	059	A0	80	00000001	00	Bin	If bit 0 is on, the user has the SPECIAL attribute in that group.
CGFLAG3	060	A0	80	00000001	00	Bin	If bit 0 is on, the user has the OPERATIONS attribute in that group.
CGFLAG4	061	A0	80	00000001	00	Bin	If bit 0 is on, the user has the REVOKE attribute in that group.
CGFLAG5	062	A0	80	00000001	00	Bin	If bit 0 is on, the user has the GRPACC attribute in that group.
CGNOTUAC	063	A0	80	00000001	00	Bin	If bit 0 is on, the user must be specifically authorized (by the PERMIT command) to use a terminal. If off, RACF uses the terminal's UACC.
CGGRPAUD	064	A0	80	00000001	00	Bin	If bit 0 is on, the user has the GROUP AUDITOR attribute in that group.
CGREVKDT	065	80	20	00000000	00	Date	The date the user will be revoked. This field either has length 0, or contains a 3-byte revoke date.
CGRESMDT	066	80	20	00000000	00	Date	The date the user will be resumed. This field either has length 0, or contains a 3-byte resume date.
TUCNT	067	10	00	00000002	00	Int	Number of user ID associations.
TUKEY	068	80	00	00000016	00	Char	Associated node and user ID. **Byte** **Meaning When Set** **0-7** The associated node name. **8-15** The associated user ID.
TUDATA	069	80	00	00000000			Associated user ID association data **Byte** **Meaning When Set** **0** Version number of the TUDATA entry.

User Template

Template Field Name (Character Data)	Field ID	Flag 1	Flag 2	Field Length Decimal	Default Value	Type	Field Being Described	
						Bin	**1**	Bitstring **0** Specifies the user as having (bit is on) or not having (bit is off) a peer user ID association. **1** Specifies the user as being (bit is on) the manager of a managed user ID association. **2** Specifies the user as being (bit is on) managed by a managed user ID association. **3** An association request for this user is pending (bit is on) on a remote RRSF node. **4** An association request for this user is pending (bit is on) on the local RRSF node. **5** Specifies that password synchronization is in effect (bit is on) for this peer-user ID association. **6** Specifies that the association request for this user was rejected (bit is on). **7** Reserved for IBM's use.
							2-20	Reserved for IBM's use.
						Date	**21-24**	The date the user ID association was defined. (*yyyymmdd*)
						Time	**25-32**	The time the user ID association was defined. For the format of the time, see the TIME macro as documented in *z/OS MVS Programming: Assembler Services Reference IAR-XCT*.
						Char	**32-36**	The date the user ID association was approved or refused. (*yyyymmdd*)
						Int	**37-44**	The time the user ID association was approved or refused. For the format of the time, see the TIME macro as documented in *z/OS MVS Programming: Assembler Services Reference IAR-XCT*.
							45-56	Reserved for IBM's use.
						Char	**57-64**	The user ID that created the entry.
CERTCT	070	10	00	00000004	00		Number of certificate names.	

Template Field Name (Character Data)	Field ID	Flag 1	Flag 2	Field Length Decimal	Default Value	Type	Field Being Described
CERTNAME	071	80	00	00000000	00		Name of certificate. Names correspond to profiles in the DIGTCERT class for the user.
CERTLABL	072	80	00	00000000	00		Label associated with the certificate.
CERTSJDN	073	80	00	00000000	00		Subject's distinguished name.
CERTPUBK	074	80	00	00000000	00		Public key associated with the certificate.
CERTRSV3	075	80	00	00000000	00		Reserved for IBM's use.
FLAG9	076	20	80	00000001	00		Restricted Access = BIT0.
NMAPCT	077	10	00	00000004	00		Number of DIGTNMAP Mapping Profiles that specify this user ID.
NMAPLABL	078	80	00	00000000	00		Label associated with this mapping.
NMAPNAME	079	80	00	00000000	00		Name of mapping profile. The names correspond to profiles in the DIGTNMAP Class.
NMAPRSV1	080	80	00	00000000	00		Reserved.
NMAPRSV2	081	80	00	00000000	00		Reserved.
NMAPRSV3	082	80	00	00000000	00		Reserved.
NMAPRSV4	083	80	00	00000000	00		Reserved.
NMAPRSV5	084	80	00	00000000	00		Reserved.

Field Name	Field ID	Flag 1	Flag 2	Combination Field IDs					Type	
Following are the COMBINATION fields of the USER template										
DEFDATE	000	40	00	004	000	000	000	000		Combination.
CREADATE	000	40	00	004	000	000	000	000		Fields.
OWNER	000	40	00	005	000	000	000	000		
PASSDATA	000	40	00	012	013	000	000	000		
NAME	000	40	00	014	000	000	000	000		
OLDPSWDS	000	40	00	026	027	000	000	000		
LOGINFO	000	40	00	035	036	000	000	000		
FIELD	000	40	00	038	039	040	000	000		
USERDATA	000	40	00	046	047	048	000	000		
CGDEFDAT	000	40	00	052	000	000	000	000		
CGCREADT	000	40	00	052	000	000	000	000		
CGOWNER	000	40	00	053	000	000	000	000		
TUENTRY	000	40	00	068	069	000	000	000		
CERTLIST	000	40	00	071	072	000	000	000		
CERTLST2	000	40	00	071	072	073	074	000		
CERTLST3	000	40	00	071	072	073	000	000		
CERTSIGL	000	40	00	071	073	074	000	000		

Template Field Name (Character Data)	Field ID	Flag 1	Flag 2	Field Length Decimal	Default Value	Type	Field Being Described
Following is the DFP segment of the USER template							
DFP	001	00	00	00000000	00		Start of segment fields
DATAAPPL	002	00	00	00000000	00	Char	Data Application; maximum length=8
DATACLAS	003	00	00	00000000	00	Char	Data Class; maximum length=8
MGMTCLAS	004	00	00	00000000	00	Char	Management Class; maximum length=8
STORCLAS	005	00	00	00000000	00	Char	Storage Class; maximum length=8
Following is the TSO segment of the USER template							
TSO	001	00	00	00000000	00		Start of segment fields
TACCNT	002	00	00	00000000	00	Char	Default account numbers; maximum length=40

User Template

Template Field Name (Character Data)	Field ID	Flag 1	Flag 2	Field Length Decimal	Default Value	Type	Field Being Described
TCOMMAND	003	00	00	00000000	00	Char	Default command at logon; maximum length=80
TDEST	004	00	00	00000000	00	Char	Destination identifier; maximum length=8
THCLASS	005	00	00	00000000	00	Char	Default hold class; maximum length=1
TJCLASS	006	00	00	00000000	00	Char	Default job class
TLPROC	007	00	00	00000000	00	Char	Default logon procedure; maximum length=8
TLSIZE	008	00	00	00000004	00	Int	Logon size
TMCLASS	009	00	00	00000000	00	Char	Default message class; maximum length=1
TMSIZE	010	00	00	00000004	00	Int	Maximum region size
TOPTION	011	20	00	00000001	00	Bin	Default for mail notices and OIDcard
TPERFORM	012	00	00	00000004	00	Int	Performance group
TRBA	013	00	00	00000003	00	Bin	RBA of user's broadcast area
TSCLASS	014	00	00	00000000	00	Char	Default sysout class
TUDATA	015	00	00	00000002	00	Bin	2 bytes of hex user data
TUNIT	016	00	00	00000000	00	Char	Default unit name; maximum length=8
TUPT	017	00	00	00000000	00	Bin	Data from UPT control block
TSOSLABL	018	00	00	00000000	00	Char	Default logon SECLABEL; maximum length=8
TCONS	019	00	00	00000000	00	Char	Consoles support
Following is the CICS segment of the USER template							
CICS	001	00	00	00000000	00		Start of segment fields
OPIDENT	002	00	00	00000003	00	Char	Operator identification; 1 to 3 bytes in length
OPCLASSN	003	10	00	00000004	00	Int	Count of operator class values
OPCLASS	004	80	00	00000001	00	Int	Operator class
OPPRTY	005	00	40	00000002	00	Int	Operator priority
XRFSOFF	006	20	00	00000001	00	Bin	XRF Re-signon option: • Bit 0 on = FORCE • Bit 0 off = NOFORCE
TIMEOUT	007	00	40	00000002	00	Bin	Terminal time-out value **Notes:** Two 1-byte binary fields: 1. first one = hours (0-99) 2. second one = minutes (0-59) 3. special case: hours=0, minutes=60 treated the same as hours=1, minutes=0
Following is the LANGUAGE segment of the USER template							
LANGUAGE	001	00	00	00000000	00		Start of segment fields
USERNL1	002	00	80	00000003	00	Char	User's primary language; 3-character code returned by the MVS message service. For more information, see *z/OS MVS Programming: Assembler Services Guide*.
USERNL2	003	00	80	00000003	00	Char	User's secondary language
Following is the OPERPARM segment of the USER template							
OPERPARM	001	00	00	00000000	00		Start of segment fields
OPERSTOR	002	00	00	00000002	00	Bin	STORAGE keyword
OPERAUTH	003	00	00	00000002	00	Bin	AUTH keyword: • X'8000' = MASTER • X'4000' = ALL • X'2000' = SYS • X'10000' = IO • X'0800' = CONS • X'0400' = INFO

Template Field Name (Character Data)	Field ID	Flag 1	Flag 2	Field Length Decimal	Default Value	Type	Field Being Described
OPERMFRM	004	00	00	00000002	00	Bin	MFORM keyword: • Bit 0 indicates T • Bit 1 indicates S • Bit 2 indicates J • Bit 3 indicates M • Bit 4 indicates X
OPERLEVL	005	00	00	00000002	00	Bin	LEVEL keyword: • Bit 0 indicates R • Bit 1 indicates I • Bit 2 indicates CE • Bit 3 indicates E • Bit 4 indicates IN • Bit 5 indicates NB • Bit 6 indicates ALL Bit 6 is mutually exclusive with all other bits except Bit 5.
OPERMON	006	00	00	00000002	00	Bin	MONITOR keyword: • Bit 0 indicates JOBNAMES • Bit 1 indicates JOBNAMEST • Bit 2 indicates SESS • Bit 3 indicates SESST • Bit 4 indicates STATUS Bits 0 and 1 are mutually-exclusive, as are bits 2 and 3.
OPERROUT	007	00	00	00000000	00	Bin	ROUTCODE keyword; 16-bit length bitstring in which each bit indicates a particular ROUTCODE.
OPERLOGC	008	00	00	00000001	00	Bin	LOGCMDRESP keyword. **Value** **Meaning When Set** **X'80'** Indicates SYSTEM was specified. **X'40'** Indicates NO was specified.
OPERMGID	009	00	00	00000001	00	Bin	MIGID keyword. **Value** **Meaning When Set** **X'80'** Indicates YES was specified. **X'40'** Indicates NO was specified.
OPERDOM	010	00	00	00000001	00	Bin	DOM keyword. **Value** **Meaning When Set** **X'80'** Indicates NORMAL was specified. **X'40'** Indicates ALL was specified. **X'20'** Indicates NONE was specified.
OPERKEY	011	00	00	00000000	00	Bin	KEY keyword; maximum length=8
OPERCMDS	012	00	00	00000000	00	Bin	CMDSYS keyword; maximum length=8 (or '*')
OPERUD	013	00	00	00000001	00	Bin	UD keyword. **Value** **Meaning When Set** **X'80'** Indicates YES was specified. **X'40'** Indicates NO was specified.
OPERMCNT	014	10	00	00000004	00	Bin	Count of MSCOPE systems
OPERMSCP	015	80	00	00000008	00	Bin	MSCOPE systems
OPERALTG	016	00	00	00000000	00	Bin	ALTGRP keyword **Value** **Meaning When Set** **X'80'** Indicates YES was specified. **X'40'** Indicates NO was specified.

User Template

Template Field Name (Character Data)	Field ID	Flag 1	Flag 2	Field Length Decimal	Default Value	Type	Field Being Described
OPERAUTO	017	00	00	00000001	00	Bin	AUTO keyword; X'80' indicates YES; X'40' indicates NO.
Following is the WORK ATTRIBUTES segment of the USER template							
WORKATTR	001	00	80	00000000	00		Start of segment fields
WANAME	002	00	80	00000000	00	Char	User name for SYSOUT; maximum length=60
WABLDG	003	00	80	00000000	00	Char	Building for delivery; maximum length=60
WADEPT	004	00	80	00000000	00	Char	Department for delivery; maximum length=60
WAROOM	005	00	80	00000000	00	Char	Room for delivery; maximum length=60
WAADDR1	006	00	80	00000000	00	Char	SYSOUT address line 1; maximum length=60
WAADDR2	007	00	80	00000000	00	Char	SYSOUT address line 2; maximum length=60
WAADDR3	008	00	80	00000000	00	Char	SYSOUT address line 3; maximum length=60
WAADDR4	009	00	80	00000000	00	Char	SYSOUT address line 4; maximum length=60
WAACCNT	010	00	80	00000000	00	Char	Account number; maximum length=255
Following is the OMVS segment of the USER template							
OMVS	001	00	00	00000000	00		Start of segment fields
UID	002	00	10	00000004	FF	Int	UID
HOME	004	00	00	00000000	00	Char	HOME Path; maximum length=1023
PROGRAM	005	00	00	00000000	00	Char	Initial Program; maximum length=1023
CPUTIME	006	00	00	00000004	FF	Int	CPUTIMEMAX
ASSIZE	007	00	00	00000004	FF	Int	ASSIZEMAX
FILEPROC	008	00	00	00000004	FF	Int	FILEPROCMAX
PROCUSER	009	00	00	00000004	FF	Int	PROCUSERMAX
THREADS	010	00	00	00000004	FF	Int	THREADSMAX
MMAPAREA	011	00	00	00000004	FF	Int	MMAPAREAMAX
Following is the NETVIEW segment of the USER template							
NETVIEW	001	00	00	00000000	00		Start of segment fields
IC	002	00	00	00000000	00	Char	The command or command list to be processed by NetView for this operator when the operator logs on to Netview; maximum length=255.
CONSNAME	003	00	00	00000000	00	Char	The default MCS console identifier; maximum length=8.
CTL	004	20	00	00000001	00	Bin	CTL keyword - Specifies whether a security check is performed for this NetView operator when they try to use a span or try to do a cross-domain logon.

Value	Meaning When Set
X'00'	Indicates CTL was not specified or CTL(SPECIFIC) was specified.
X'80'	Indicates CTL(GLOBAL) was specified.
X'40'	Indicates CTL(GENERAL) was specified.

Template Field Name (Character Data)	Field ID	Flag 1	Flag 2	Field Length Decimal	Default Value	Type	Field Being Described
MSGRECVR	005	20	00	00000001	00	Bin	MSGRECVR keyword **Value** **Meaning When Set** **X'00'** Indicates the operator can receive unsolicited messages that are not routed to a specific NetView operator. **X'80'** Indicates the operator cannot receive unsolicited messages that are not routed to a specific NetView operator.
OPCLASSN	006	10	00	00000004	00	Int	Count of operator class values.
OPCLASS	007	80	40	00000002	00	Int	Specifies a NetView scope class for which the operator has authority. This is a 2-byte repeating field. Each member can have fixed-binary values from 1 to 2040.
DOMAINSN	008	10	00	00000004	00	Int	The number of domains the NetView operator controls.
DOMAINS	009	80	00	00000000	00	Char	Specifies the identifier of NetView programs in another NetView domain for which this operator has authority. This is a variable length (5-character maximum) repeating field.
NGMFADMN	010	20	00	00000001	00	Bin	NGMFADMN keyword **Value** **Meaning When Set** **X'00'** The NetView operator does not have administrator authority to the NetView Graphic Monitor Facility (NGMF). **X'80'** The NetView operator has administrator authority to the NetView graphic monitor facility (NGMF).
NGMFVSPN	011	00	00	00000000	00		NetView Graphic Monitor Facility view span options; maximum length=8
Following is the DCE segment of the USER template							
DCE	001	00	00	00000000	00		Start of segment fields
UUID	002	00	00	00000036	FF	Char	User's DCE principal's UUID; exactly 36 characters, in the format *nnnnnnnn-nnnn-nnnn-nnnn-nnnnnnnnnnnn* where *n* is any hexadecimal digit.
DCENAME	003	00	00	00000000	00	Char	User's DCE principal name; maximum length=1023
HOMECELL	004	00	00	00000000	00	Char	Home cell for this DCE user; maximum length=1023, and it must start with either */.../* or */.:/*
HOMEUUID	005	00	00	00000036	FF	Char	Home cell UUID; exactly 36 characters, in the format *nnnnnnnn-nnnn-nnnn-nnnn-nnnnnnnnnnnn* where *n* is any hexadecimal digit.
DCEFLAGS	006	20	00	00000001	00	Bin	User flags
DPASSWDS	007	00	00	00000000	00	Char	Current DCE password
DCEENCRY	008	00	00	00000071	00	Bin	PW mask/enrypt key
Following is the OVM segment of the USER template							
OVM	001	00	00	00000000	00		Start of segment fields
UID	002	00	00	00000004	FF	Int	OVM - UID
HOME	003	00	00	00000000	00	Char	Home path; maximum length=1023
PROGRAM	004	00	00	00000000	00	Char	Initial program; maximum length=1023
FSROOT	005	00	00	00000000	00	Char	File system root; maximum length=1023
Following is the LNOTES segment of the USER template							

User Template

Template Field Name (Character Data)	Field ID	Flag 1	Flag 2	Field Length Decimal	Default Value	Type	Field Being Described
LNOTES	001	00	00	00000000	00		Start of segment fields
SNAME	002	00	10	00000000	00	Char	User's short name; maximum length=64
Following is the NDS segment of the USER template							
NDS	001	00	00	00000000	00		Start of segment fields
UNAME	002	00	10	00000000	00	Char	User's user name; maximum length=246
Following is the KERB segment of the USER template							
KERB	001	00	00	00000000	00		Start of segment fields
KERBNAME	002	00	00	00000000	00	Char	Kerberos principal name
MINTKTLF	003	00	00	00000000	00	Char	Reserved
MAXTKTLF	004	00	00	00000000	00	Char	Maximum ticket life
DEFTKTLF	005	00	00	00000000	00	Char	Reserved
SALT	006	00	00	00000000	00	Char	Current key salt
ENCTYPE	007	00	00	00000000	00	Char	Encryption type
CURKEYV	008	00	00	00000000	00	Char	Current key version
CURKEY	009	00	00	00000000	00	Char	Current DES key
PREVKEYV	010	00	00	00000000	00	Char	Previous key version
PREVKEY	011	00	00	00000000	00	Char	Previous DES key
ENCRYPT	012	00	00	00000004	55	Bin	Encryption types for SETROPTS KERBLVL(1)
Following is the PROXY segment of the USER template							
PROXY	001	00	00	00000000	00		Start of segment fields
LDAPHOST	002	00	00	00000000	00	Char	LDAP server URL; maximum length: 1023
BINDDN	003	00	00	00000000	00	Char	Bind distinguished name; maximum length: 1023
BINDPW	004	00	08	00000000	00	Char	Bind password;maximum length: 128
BINDPWKY	005	00	08	00000071	00	Char	Bind password mask or encrypt key
Following is the EIM segment of the USER template							
LDAPPROF	1	00	00	00000000	00	Char	LDAPBIND profile name

Connect template for the RACF database

The connect template is included to maintain compatibility with previous releases. You can continue to code macros to manipulate CONNECT data. This template is provided to show what fields continue to be supported. Information that was formerly stored in CONNECT profiles was moved to the USER profile. The information is in the CGGRPCT repeat group, and the fields are prefixed by "CG".

Notes:

1. Application developers should not depend on being able to use RACROUTE REQUEST=EXTRACT for the BASE segment fields on any security product other than RACF. These products are expected to support only such segments as DFP and TSO.
2. The default values for this template are located in the User Template.

The contents of the connect template are as follows:

Template Field Name (Character Data)	Field ID	Flag 1	Flag 2	Field Length Decimal	Default Value	Type	Field Being Described
CONNECT	001	00	00	00000000			
ENTYPE	002	00	00	00000001		Int	The number (3) corresponding to connect profiles.
VERSION	003	00	00	00000001		Int	The version field from the profile. Always X'01'.

Template Field Name (Character Data)	Field ID	Flag 1	Flag 2	Field Length Decimal	Default Value	Type	Field Being Described
AUTHDATE	004	00	A0	00000003		Date	The date the user was connected to the group.
AUTHOR	005	00	80	00000008		Char	The owner (user ID) of the connect entry.
LJTIME	006	01	00	00000004		Time	The time that RACROUTE REQUEST=VERIFY was last issued for this user and group.
LJDATE	007	01	20	00000003		Date	The date that RACROUTE REQUEST=VERIFY was last issued for this user and group.
UACC	008	20	80	00000001		Bin	The default universal access authority assigned to the user for this group. **Bit** — **Meaning When Set** **0** — ALTER access **1** — CONTROL access **2** — UPDATE access **3** — READ access **4** — EXECUTE access **5-6** — Reserved for IBM's use **7** — EXECUTE access
INITCNT	009	01	00	00000002		Int	The number of RACROUTE REQUEST=VERIFY macro instructions issued for this user and group.
FLAG1	010	20	80	00000001		Bin	Identifies the user as having (bit 0 is on) or not having the ADSP attribute.
FLAG2	011	20	80	00000001		Bin	Identifies the user as having (bit 0 is on) or not having the group-SPECIAL attribute.
FLAG3	012	20	80	00000001		Bin	Identifies the user as having (bit 0 is on) or not having the group-OPERATIONS attribute.
FLAG4	013	20	80	00000001		Bin	Identifies the user as having (bit 0 is on) or not having the REVOKE attribute.
FLAG5	014	20	80	00000001		Bin	Identifies the user as having (bit 0 is on) or not having the GRPACC attribute.
NOTRMUAC	015	20	80	00000001		Bin	Identifies whether the user must be authorized by the PERMIT command with at least READ authority to access a terminal. (If not, RACF uses the terminal's universal access authority.) If bit 0 is on, the user must be specifically authorized to use the terminal.
GRPAUDIT	016	20	80	00000001		Bin	Identifies the user as having (bit 0 is on) or not having the group-AUDITOR attribute.
REVOKEDT	017	00	20	00000000		Date	The date the user will be revoked. This field either has length 0, or contains a 3-byte revoke date.
RESUMEDT	018	00	20	00000000		Date	The date the user will be resumed. This field either has length 0, or contains a 3-byte resume date.

Field Name	Field ID	Flag 1	Flag 2	Combination Field IDs					Type	
The following are the COMBINATION fields.										
DEFDATE	000	40	00	004	000	000	000	000	Char	Combination.
CREADATE	000	40	00	004	000	000	000	000	Char	Fields.
OWNER	000	40	00	005	000	000	000	000	Char	

Data set template for the RACF database

The data set template describes the fields of the data set profiles in a RACF database.

NOT programming interface information

ACL2VAR	CATEGORY	FLDFLAG	FLDVALUE
AUDITQF	FIELD	FLDNAME	NUMCTGY
AUDITQS	FLDCNT		

End of NOT programming interface information

Notes:

1. Application developers should not depend on being able to use RACROUTE REQUEST=EXTRACT for the BASE segment fields on any security product other than RACF. These products are expected to support only such segments as DFP and TSO.
2. The TME segment fields are intended to be updated by Tivoli applications, which manage updates, permissions, and cross references among the fields. The TME fields should only be directly updated on an exception basis. See *z/OS Security Server RACF Command Language Reference* for formats of the field data as enforced by the RACF commands. Use caution when directly updating TME fields, as the updates may be overridden by subsequent actions of Tivoli applications.

The contents of the data set template are as follows:

Template Field Name (Character Data)	Field ID	Flag 1	Flag 2	Field Length Decimal	Default Value	Type	Field Being Described
DATASET	001	00	00	00000000	00		
ENTYPE	002	00	00	00000001	04	Int	The number (4) corresponding to data set profiles.
VERSION	003	00	00	00000001	01	Int	The version field from the profile. Always X'01'.
CREADATE	004	00	20	00000003	FF	Date	The date the data set was initially defined to RACF; 3-byte date.
AUTHOR	005	00	00	00000008	FF	Char	The owner of the data set.
LREFDAT	006	01	20	00000003	FF	Date	The date the data set was last referenced; 3-byte date.
LCHGDAT	007	01	20	00000003	FF	Date	The date the data set was last updated; 3-byte date.
ACSALTR	008	01	00	00000002	FF	Int	The number of times the data set was accessed with ALTER authority.
ACSCNTL	009	01	00	00000002	FF	Int	The number of times the data set was accessed with CONTROL authority.
ACSUPDT	010	01	00	00000002	FF	Int	The number of times the data set was accessed with UPDATE authority.
ACSREAD	011	01	00	00000002	FF	Int	The number of times the data set was accessed with READ authority.

Template Field Name (Character Data)	Field ID	Flag 1	Flag 2	Field Length Decimal	Default Value	Type	Field Being Described
UNIVACS	012	20	00	00000001	00	Bin	The universal access authority for the data set. **Bit** — **Meaning When Set** **0** — ALTER access **1** — CONTROL access **2** — UPDATE access **3** — READ access **4** — EXECUTE access **5-6** — Reserved for IBM's use **7** — EXECUTE access
FLAG1	013	20	00	00000001	00	Bin	Identifies whether the data set is a group data set. If bit 0 is on, the data set is a group data set.
AUDIT	014	20	00	00000001	00	Bin	Audit Flags. **Bit** — **Meaning When Set** **0** — Audit all accesses **1** — Audit successful accesses **2** — Audit accesses that fail **3** — No auditing **4-7** — Reserved for IBM's use
GROUPNM	015	00	00	00000008	FF	Char	The current connect group of the user who created this data set.
DSTYPE	016	20	00	00000001	00	Bin	Identifies the data set as a VSAM, non-VSAM (or generic), MODEL or TAPE data set. **Bit** — **Meaning When Set** **0** — VSAM data set (non-VSAM if this bit is set to 0) **1** — MODEL profile **2** — Type = TAPE when set on **3-7** — Reserved for IBM's use
LEVEL	017	00	00	00000001	FF	Int	Data set level.
DEVTYP	018	00	00	00000004	FF	Bin	The type of device on which the data set resides; only for non-model, discrete data sets. For more information, refer to UCBTYPE in *z/OS MVS Data Areas, Vol 5 (SSAG-XTLST)*.
DEVTYPX	019	00	00	00000008	FF	Char	The EBCDIC name of the device type on which the data set resides; only for non-model, discrete data sets.
GAUDIT	020	20	00	00000001	00	Bin	Global audit flags. (Audit options specified by a user with the AUDITOR or group-AUDITOR attribute.) **Bit** — **Meaning When Set** **0** — Audit all accesses **1** — Audit successful accesses **2** — Audit accesses that fail **3** — No auditing **4-7** — Reserved for IBM's use
INSTDATA	021	00	00	00000000	00	Char	Installation data; maximum length=255.

Data Set Template

Template Field Name (Character Data)	Field ID	Flag 1	Flag 2	Field Length Decimal	Default Value	Type	Field Being Described
GAUDITQF	025	00	00	00000001	FF	Bin	Global audit FAILURES qualifier. The AUDITQS, AUDITQF, GAUDITQS, and GAUDITQF fields have the following format: **Value** **Meaning When Set** **X'00'** Log access at READ level **X'01'** Log access at UPDATE level **X'02'** Log access at CONTROL level **X'03'** Log access at ALTER level
AUDITQS	022	00	00	00000001	FF	Bin	Audit SUCCESS qualifier.
AUDITQF	023	00	00	00000001	FF	Bin	Audit FAILURES qualifier.
GAUDITQS	024	00	00	00000001	FF	Bin	Global audit SUCCESS qualifier.
WARNING	026	20	00	00000001	00	Bin	Identifies the data set as having (bit 7 is on) or not having the WARNING attribute.
SECLEVEL	027	00	00	00000001	FF	Int	Data set security level.
NUMCTGY	028	10	00	00000004	00	Int	The number of categories.
CATEGORY	029	80	00	00000002	00	Bin	A list of numbers corresponding to the categories to which this data set belongs.
NOTIFY	030	00	00	00000000	00	Char	User to be notified when access violations occur against a data set protected by this profile.
RETPD	031	00	00	00000000	00	Int	The number of days protection is provided for the data set. If used, the field will be a two-byte binary number.
ACL2CNT	032	10	00	00000004	00	Int	The number of program and user combinations currently authorized to access the data set.
PROGRAM	033	80	00	00000008	00	Char	The name of a program currently authorized to access the data set, or a 1-byte flag followed by 7 bytes reserved.
USER2ACS	034	80	00	00000008	00	Char	User ID or group.
PROGACS	035	80	00	00000001	00	Bin	The access authority of the program and user combinations.
PACSCNT	036	80	00	00000002	00	Int	Access count.
ACL2VAR	037	80	00	00000000	00	Char	Additional conditional data, 9-byte length, in which the the 1st byte tells what kind of access is allowed and the remaining 8 bytes contain the data.
FLDCNT	038	10	00	00000004	00		Reserved for IBM's use.
FLDNAME	039	80	00	00000008	00		Reserved for IBM's use.
FLDVALUE	040	80	00	00000000	00		Reserved for IBM's use.
FLDFLAG	041	A0	00	00000001	00		Reserved for IBM's use.
VOLCNT	042	10	00	00000004	00	Int	The number of volumes containing the data set.
VOLSER	043	80	00	00000006	00	Char	A list of the serial numbers of the volumes containing the data set.
ACLCNT	044	10	00	00000004	00	Int	The number of users and groups currently authorized to access the data set.
USERID	045	80	00	00000008	00	Char	The user ID or group name of each user or group authorized to access the data set.

Template Field Name (Character Data)	Field ID	Flag 1	Flag 2	Field Length Decimal	Default Value	Type	Field Being Described
USERACS	046	A0	00	00000001	00	Bin	The access authority that each user or group has for the data set. **Bit** — **Meaning When Set** **0** — ALTER access **1** — CONTROL access **2** — UPDATE access **3** — READ access **4** — EXECUTE access **5-6** — Reserved for IBM's use **7** — NONE access
ACSCNT	047	80	00	00000002	00	Int	The number of times the data set was accessed by each user or group.
USRCNT	048	10	00	00000004	00	Int	Reserved for installation's use.
USRNM	049	80	00	00000008	00		Reserved for installation's use.
USRDATA	050	80	00	00000000	00		Reserved for installation's use.
USRFLG	051	A0	00	00000001	00		Reserved for installation's use.
SECLABEL	052	00	00	00000008	00	Char	Security label.

Field Name	Field ID	Flag 1	Flag 2	Combination Field IDs					Type	
Following are the COMBINATION fields of the Data Set Template										
DEFDATE	000	40	00	004	000	000	000	000	Char	Combination.
AUTHDATE	000	40	00	004	000	000	000	000	Char	Fields.
OWNER	000	40	00	005	000	000	000	000	Char	
UACC	000	40	00	012	000	000	000	000		
ACL2	000	40	00	033	034	035	036	037		
ACL2A3	000	40	00	033	034	035	037	000		
ACL2A2	000	40	00	033	034	035	036	000		
ACL2A1	000	40	00	033	034	035	000	000		
FIELD	000	40	00	039	040	041	000	000		
VOLUME	000	40	00	043	000	000	000	000		
ACL	000	40	00	045	046	047	000	000		
ACL1	000	40	00	045	046	000	000	000		
USERDATA	000	40	00	049	050	051	000	000		

Template Field Name (Character Data)	Field ID	Flag 1	Flag 2	Field Length Decimal	Default Value	Type	Field Being Described
Following is the DFP segment of the Data Set Template							
DFP	001	00	00	00000000	00		Start of segment fields
RESOWNER	002	00	00	00000008	FF	Char	Resource owner; must represent a user ID or group name

Template Field Name (Character Data)	Field ID	Flag 1	Flag 2	Field Length Decimal	Default Value	Type	Field Being Described
Following is the TME segment of the Data Set Template							
TME	001	00	00	00000000	00		Start of segment fields
ROLEN	002	10	00	00000004	00	Int	Count of role-access specifications
ROLES	003	80	00	00000000	00	Char	Role-access specifications

General template for the RACF database

The general template describes the fields of general resource profiles in a RACF database.

NOT programming interface information

ACL2RSVD	ENCTYPE	GAUDITQF	PREVKEYV
AUDITQF	FIELD	GAUDITQS	RACLDSP
AUDITQS	FLDCNT	MEMCNT	RACLHDR
CATEGORY	FLDFLAG	MEMLIST	SALT
CURKEY	FLDNAME	NUMCTGY	SSKEY
CURKEYV	FLDVALUE	PREVKEY	

End of NOT programming interface information

Notes:

1. Application developers should not depend on being able to use RACROUTE REQUEST=EXTRACT for the BASE segment fields on any security product other than RACF. These products are expected to support only such segments as DFP and TSO.
2. The TME segment fields are intended to be updated by Tivoli applications, which manage updates, permissions, and cross references among the fields. The TME fields should only be directly updated on an exception basis. See *z/OS Security Server RACF Command Language Reference* for formats of the field data as enforced by the RACF commands. Use caution when directly updating TME fields, as the updates may be overridden by subsequent actions of Tivoli applications.

The contents of the general template are as follows:

Template Field Name (Character Data)	Field ID	Flag 1	Flag 2	Field Length Decimal	Default Value	Type	Field Being Described
The following is the BASE segment of the GENERAL template.							
GENERAL	001	00	00	00000000	00		
ENTYPE	002	00	00	00000001	05	Int	The number (5) corresponding to profiles for resources defined in the class descriptor table.
VERSION	003	00	00	00000001	01	Int	The version field from the profile. Always X'01'.
CLASTYPE	004	00	00	00000001	FF	Int	The class to which the resource belongs (from the ID=class-number operand of the ICHERCDE macro).
DEFDATE	005	00	20	00000003	FF	Date	The date the resource was defined to RACF.
OWNER	006	00	00	00000008	FF	Char	The owner of the resource.
LREFDAT	007	01	20	00000003	FF	Date	The date the resource was last referenced.
LCHGDAT	008	01	20	00000003	FF	Date	The date the resource was last updated.
ACSALTR	009	01	00	00000002	FF	Int	The number of times the resource was accessed with ALTER authority.
ACSCNTL	010	01	00	00000002	FF	Int	The number of times the resource was accessed with CONTROL authority.
ACSUPDT	011	01	00	00000002	FF	Int	The number of times the resource was accessed with UPDATE authority.
ACSREAD	012	01	00	00000002	FF	Int	The number of times the resource was accessed with READ authority.

Template Field Name (Character Data)	Field ID	Flag 1	Flag 2	Field Length Decimal	Default Value	Type	Field Being Described
UACC	013	20	80	00000001	00	Bin	The universal access authority for the resource. **Bit** — **Meaning When Set** **0** — ALTER access **1** — CONTROL access **2** — UPDATE access **3** — READ access **4** — EXECUTE access **5-6** — Reserved for IBM's use **7** — NONE access.
AUDIT	014	20	00	00000001	00	Bin	Audit flags. **Bit** — **Meaning When Set** **0** — Audit all accesses **1** — Audit successful accesses **2** — Audit accesses that fail **3** — No auditing **4-7** — Reserved for IBM's use
LEVEL	015	20	00	00000001	00	Int	Resource level.
GAUDIT	016	20	00	00000001	00	Bin	Global audit flags. **Bit** — **Meaning When Set** **0** — Audit all accesses **1** — Audit successful accesses **2** — Audit accesses that fail **3** — No auditing **4-7** — Reserved for IBM's use
INSTDATA	017	00	00	00000000	00	Char	Installation data; maximum length=255.
GAUDITQF	021	00	00	00000001	FF	Bin	Global audit FAILURES qualifier. The AUDITQS, AUDITQF, GAUDITQS, and GAUDITQF fields have the following format: **Value** — **Meaning** **X'00'** — Log access at READ authority **X'01'** — Log access at UPDATE authority **X'02'** — Log access at CONTROL authority **X'03'** — Log access at ALTER authority
AUDITQS	018	00	00	00000001	FF	Bin	Audit SUCCESS qualifier. (Audit options specified by a user with the AUDITOR or group-AUDITOR attribute.) **Bit** — **Meaning When Set** **0** — Audit all accesses **1** — Audit successful accesses **2** — Audit accesses that fail **3** — No auditing **4-7** — Reserved for IBM's use
AUDITQF	019	00	00	00000001	FF	Bin	Audit FAILURES qualifier. (Audit options specified by a user with the AUDITOR or group-AUDITOR attribute.) **Bit** — **Meaning When Set** **0** — Audit all accesses **1** — Audit successful accesses **2** — Audit accesses that fail **3** — No auditing **4-7** — Reserved for IBM's use

General Template

Template Field Name (Character Data)	Field ID	Flag 1	Flag 2	Field Length Decimal	Default Value	Type	Field Being Described
GAUDITQS	020	00	00	00000001	FF	Bin	Global audit SUCCESS qualifier. (Audit options specified by a user with the AUDITOR or group-AUDITOR attribute.) **Bit** — **Meaning When Set** **0** — Audit all accesses **1** — Audit successful accesses **2** — Audit accesses that fail **3** — No auditing **4-7** — Reserved for IBM's use
WARNING	022	20	00	00000001	00	Bin	Identifies the data set as having (bit 7 is on) or not having the WARNING attribute.
RESFLG	023	20	00	00000001	00	Bin	Resource profile flags: **Bit** — **Meaning When Set** **0** — TAPEVOL may only contain one data set. **1** — TAPEVOL profile is automatic. **2** — Maintain TVTOC for TAPEVOL. **3-7** — Reserved for IBM's use
TVTOCCNT	024	10	00	00000004	00	Int	The number of TVTOC entries.
TVTOCSEQ	025	80	00	00000002	00	Int	The file sequence number of tape data set.
TVTOCCRD	026	80	20	00000003	00	Date	The date the data set was created.
TVTOCIND	027	A0	00	00000001	00	Bin	Data set profiles flag (RACF indicator bit): **Bit** — **Meaning When Set** **1** — Discrete data set profile exists **2-7** — Reserved for IBM's use
TVTOCDSN	028	80	00	00000000	00	Char	The RACF internal name.
TVTOCVOL	029	80	00	00000000	00	Char	This field is a list of the volumes on which the tape data set resides.
TVTOCRDS	030	80	00	00000000	00	Char	The name used when creating the tape data set; maximum length=255.
NOTIFY	031	00	00	00000000	00	Char	The user to be notified when access violations occur against resource protected by this profile.
LOGDAYS	032	20	00	00000001	00	Bin	The days of the week the TERMINAL may not be used. (Bit 0 equals Sunday, bit 1 equals Monday, and so on).
LOGTIME	033	00	00	00000000	00	Time	The time of the day the TERMINAL may be used.
LOGZONE	034	00	00	00000000	00	Bin	The time zone in which the terminal is located.
NUMCTGY	035	10	00	00000004	00	Int	Number of categories.
CATEGORY	036	80	00	00000002	00	Int	List of categories.
SECLEVEL	037	00	00	00000001	FF	Int	Resource security level.
FLDCNT	038	10	00	00000004	00	Int	Reserved for IBM's use.
FLDNAME	039	80	00	00000008	00		Reserved for IBM's use.
FLDVALUE	040	80	00	00000000	00		Reserved for IBM's use.
FLDFLAG	041	A0	00	00000001	00		Reserved for IBM's use.
APPLDATA	042	00	00	00000000	00	Char	Application data.
MEMCNT	043	10	80	00000004	00	Int	The number of members.
MEMLST	044	80	80	00000000	00	Bin	The resource group member.
VOLCNT	045	10	00	00000004	00	Int	Number of volumes in tape volume set.
VOLSER	046	80	00	00000006	00	Char	Volume serials of volumes in tape volume set.
ACLCNT	047	10	80	00000004	00	Int	The number of users and groups currently authorized to access the resource.
USERID	048	80	80	00000008	00	Char	The user ID or group name of each user or group authorized to access the resource.

Template Field Name (Character Data)	Field ID	Flag 1	Flag 2	Field Length Decimal	Default Value	Type	Field Being Described
USERACS	049	A0	80	00000001	00	Bin	The access authority that each user or group has for the resource. **Bit** — **Meaning When Set** **0** — ALTER access **1** — CONTROL access **2** — UPDATE access **3** — READ access **4** — EXECUTE access **5-6** — Reserved for IBM's use **7** — NONE access **Note:** Each of the above access authority fields have mutually-exclusive bits with the exception of EXECUTE+NONE.
ACSCNT	050	80	00	00000002	00	Int	The number of times the resource was accessed by each user or group.
USRCNT	051	10	00	00000004	00	Int	Reserved for installation's use.
USRNM	052	80	00	00000008	00		Reserved for installation's use.
USRDATA	053	80	00	00000000	00		Reserved for installation's use.
USRFLG	054	A0	00	00000001	00		Reserved for installation's use.
SECLABEL	055	00	00	00000008	00	Char	Security Label (SECLABEL).
ACL2CNT	056	10	00	00000004	00	Int	Number of entries in conditional access list.
ACL2NAME	057	80	00	00000008	00	Bin	1 indicator byte; 7 bytes reserved.
ACL2UID	058	80	00	00000008	00	Char	User ID or group.
ACL2ACC	059	80	00	00000001	00	Bin	Access authority.
ACL2ACNT	060	80	00	00000002	00	Int	Access count.
ACL2RSVD	061	80	00	00000000	00	Bin	Conditional data. Reserved for IBM's use.
RACLHDR	062	00	00	00000020	00	Bin	RACGLIST header.
RACLDSP	063	00	00	00000000	00	Bin	RACGLIST dataspace information.
FILTERCT	064	10	00	00000004	00		Number of names that Hash to this DIGTNMAP Profile.
FLTRLABL	065	80	00	00000000	00		Label associated with this DIGTNMAP Mapping (matches NMAPLABL for user named by FLTRUSER or user irrmulti.)
FLTRSTAT	066	A0	00	00000001	00		Trust status - bit 0 on for trusted.
FLTRUSER	067	80	00	00000000	00		User ID or criteria profile name.
FLTRNAME	068	80	00	00000000	00		Unhashed issuer's name filter used to create this profile name, (max of 255), followed by a separator, (X'4A'), and the unhashed subject's name filter used to create this profile name, (max of 255).
FLTRSVD1	069	80	00	00000000	00		Reserved.
FLTRSVD2	070	80	00	00000000	00		Reserved.
FLTRSVD3	071	80	00	00000000	00		Reserved.
FLTRSVD4	072	80	00	00000000	00		Reserved.
FLTRSVD5	073	80	00	00000000	00		Reserved.
RACDHDR	074	00	08	00000000	00	Bin	CACHECLS header.

Field Name	Field ID	Flag 1	Flag 2	Combination Field IDs					Type	
Following is the COMBINATION segment of the GENERAL template.										
CREADATE	000	40	00	005	000	000	000	000		Combination.
AUTHDATE	000	40	00	005	000	000	000	000		Fields.
AUTHOR	000	40	00	006	000	000	000	000		
TVTOC	000	48	00	025	026	027	028	029		
	000	40	00	030	000	000	000	000		
LOGINFO	000	40	00	032	033	034	000	000		

General Template

Field Name	Field ID	Flag 1	Flag 2	Combination Field IDs					Type	
FIELD	000	40	00	039	040	041	000	000		
ACL	000	40	00	048	049	050	000	000		
ACL1	000	40	00	048	049	000	000	000		
USERDATA	000	40	00	052	053	054	000	000		
ACL2	000	40	00	057	058	059	060	061		Conditional access list
ACL2A3	000	40	00	057	058	059	060	000		Conditional access list
FLTRLST1	000	40	00	065	066	067	068	000		Combo field for FILTER
FLTRLST2	000	40	00	065	067	068	000	000		Combo field for FILTER
CERTRING	000	40	00	010	011	009	000	000		Digital Certificate Data.
CERTRNG2	000	40	00	009	011	000	000	000		
CERTRNG3	000	40	00	009	012	013	000	000		

Template Field Name (Character Data)	Field ID	Flag 1	Flag 2	Field Length Decimal	Default Value	Type	Field Being Described
Following is the SESSION segment of the GENERAL template.							
SESSION	001	00	00	00000000	00		Start of segment fields
SESSKEY	002	00	00	00000000	00	Bin	Session key; maximum length = 8
SLSFLAGS	003	20	00	00000001	00	Bin	Session flag byte **Bit** — **Meaning When Set** **0** — SLSLOCK—This profile is locked out **1-7** — Reserved for IBM's use
KEYDATE	004	00	00	00000004	00	Date	Last date session key was changed. It is in the format *0cyyddF* where *c*=0 for 1900-1999 and *c*=1 for 2000-2099. For more information on this MVS-returned format, see *z/OS MVS Programming: Assembler Services Guide*.
KEYINTVL	005	00	00	00000002	00	Int	Number of days before session key expires
SLSFAIL	006	00	00	00000002	00	Int	Current number of invalid attempts
MAXFAIL	007	00	00	00000002	00	Int	Number of invalid attempts before lockout
SENTCNT	008	10	00	00000004	00	Int	Number of session entities in list
SENTITY	009	80	00	00000035	00	Char	Entity name
SENTFLCT	010	80	00	00000002	00	Int	Number of failed attempts for this entity
CONVSEC	011	20	00	00000001	00	Bin	Conversation security. **Value** — **Meaning** **X'40'** — Conversation security **X'50'** — Persistent verification **X'60'** — User ID and password already verified **X'70'** — User ID and password already verified plus persistent verification **X'80'** — Security none
Following is the DLFDATA segment of the GENERAL template.							
DLFDATA	001	00	00	00000000	00		Start of segment fields
RETAIN	002	20	00	00000001	00	Bin	Retain flag byte
JOBNMCNT	003	10	00	00000004	00	Int	Count of jobnames
JOBNAMES	004	80	00	00000000	00	Char	Jobnames; maximum length=8
Following is the SSIGNON segment of the GENERAL template.							
SSIGNON	001	00	00	00000000	00		Start of segment fields
SSKEY	002	00	00	00000000	00	Bin	Secured signon key
Following is the STDATA segment of the GENERAL template.							
STDATA	001	00	00	00000000	00		Start of segment fields
STUSER	002	00	00	00000008	40	Char	User ID or =MEMBER
STGROUP	003	00	00	00000008	40	Char	Group name or =MEMBER
FLAGTRUS	004	20	00	00000001	00	Bin	Trusted flag, X'80' = trusted

Template Field Name (Character Data)	Field ID	Flag 1	Flag 2	Field Length Decimal	Default Value	Type	Field Being Described
FLAGPRIV	005	20	00	00000001	00	Bin	Privileged flag, X'80' = privileged
FLAGTRAC	006	20	00	00000001	00	Bin	Trace usage flag X'80' = issue IRR8I2I
Following is the SVFMR segment of the GENERAL template.							
SVFMR	001	00	00	00000000	00		Start of segment fields
SCRIPTN	002	00	00	00000008	00	Char	Script name
PARMN	003	00	00	00000008	00	Char	Parameter name
Following is the CERTDATA segment of the GENERAL template.							
CERTDATA	001	00	00	00000000	00		Start of segment fields
CERT	002	00	00	00000000	00	Bin	Digital Certificate
CERTPRVK	003	00	00	00000000	00	Bin	Private key or key label
RINGCT	004	10	00	00000004	00	Int	Number of key rings associated with this certificate
RINGNAME	005	80	00	00000000	00	Char	Profile name of a ring with which this certificate is associated
CERTSTRT	006	00	00	00000000	00		Date and time from which the certificate is valid. This is an 8-byte TOD format field.
CERTEND	007	00	00	00000000	00		Date and time after which the certificate is not valid. This is an 8-byte TOD format field.
							The CERTCT repeat group identifies the certificates that are associated with a key ring. It is used **only** with DIGTRING profiles.
CERTCT	008	10	00	00000004	00	Int	The number of certificates associated with this key ring
CERTNAME	009	80	00	00000000	00	Char	The profile name of the certificate
CERTUSAG	010	80	00	00000004	00	Bin	Certificate usage in ring: • X'00000000' - PERSONAL • X'00000001' - SITE • X'00000002' - CERTAUTH
CERTDFLT	011	80	00	00000001	00	Bin	Verifies if it is the default certificate: • X'00' - Not the default • X'80' - The default
CERTSJDN	012	80	00	00000000	00	Bin	The subject name of the entity to whom the certificate is issued. This field is a BER-encoded format of the subject's distinguished name as contained in the certificate
CERTLABL	013	80	00	00000000	00	Char	Label associated with the certificate
CERTRSV1	014	80	00	00000000	00		Reserved for IBM's use.
CERTRSV2	015	80	00	00000000	00		Reserved for IBM's use.
CERTRSV3	016	80	00	00000000	00		Reserved for IBM's use.
CERTRSV4	017	80	00	00000000	00		Reserved for IBM's use.
CERTRSV5	018	80	00	00000000	00		Reserved for IBM's use.
CERTRSV6	019	80	00	00000000	00		Reserved for IBM's use.
CERTRSV7	020	80	00	00000000	00		Reserved for IBM's use.
CERTRSV8	021	80	00	00000000	00		Reserved for IBM's use.
CERTRSV9	022	80	00	00000000	00		Reserved for IBM's use.
CERTRSVA	023	80	00	00000000	00		Reserved for IBM's use.
CERTRSVB	024	80	00	00000000	00		Reserved for IBM's use.
CERTRSVC	025	80	00	00000000	00		Reserved for IBM's use.
CERTRSVD	026	80	00	00000000	00		Reserved for IBM's use.
CERTRSVE	027	80	00	00000000	00		Reserved for IBM's use.
CERTRSVF	028	80	00	00000000	00		Reserved for IBM's use.
CERTRSVG	029	80	00	00000000	00		Reserved for IBM's use.
CERTRSVH	030	80	00	00000000	00		Reserved for IBM's use.

General Template

Template Field Name (Character Data)	Field ID	Flag 1	Flag 2	Field Length Decimal	Default Value	Type	Field Being Described
CERTRSVI	031	80	00	00000000	00		Reserved for IBM's use.
CERTRSVJ	032	80	00	00000000	00		Reserved for IBM's use.
CERTRSVK	033	80	00	00000000	00		Reserved for IBM's use.
CERTPRVT	034	00	00	00000004	00	Bin	Private key type: • X'00000000' - No private key • X'00000001' - PKCS DER-encoded • X'00000002' - ICSF token label • X'00000003' - PCICC label
CERTPRVS	035	00	00	00000004	00	Int	Private key size in bits
CERTLSER	036	00	00	00000008	00	Bin	The low order 8 bytes of the last certificate that was signed with this key. This field is used with DIGTCERT profiles only
RINGSEQN	037	00	00	00000004	00	Int	Ring change count
Following is the TME segment of the GENERAL template.							
TME	001	00	00	00000000	00		Start of segment fields
PARENT	002	00	00	00000000	00	Char	Parent name
CHILDN	003	10	00	00000004	00	Int	Count of children
CHILDREN	004	80	00	00000000	00	Char	Child names
RESN	005	10	00	00000004	00	Int	Count of resource-access specifications
RESOURCE	006	80	00	00000000	00		Resource-access specifications
GROUPN	007	10	00	00000004	00	Int	Count of groups
GROUPS	008	80	00	00000008	00		Group names
ROLEN	009	10	00	00000004	00	Int	Count of role-access specifications
ROLES	010	80	00	00000000	00	Char	Role-access specifications
Following is the KERB segment of the GENERAL template							
KERB	001	00	00	00000000	00		Start of segment fields
KERBNAME	002	00	00	00000000	00	Char	Kerberos realm name
MINTKTLF	003	00	00	00000000	00	Char	Minimum ticket life
MAXTKTLF	004	00	00	00000000	00	Char	Maximum ticket life
DEFTKTLF	005	00	00	00000000	00	Char	Default ticket life
SALT	006	00	00	00000000	00	Char	Current key salt
ENCTYPE	007	00	00	00000000	00	Char	Encryption type
CURKEYV	008	00	00	00000000	00	Char	Current key version
CURKEY	009	00	00	00000000	00	Char	Current DES key
PREVKEYV	010	00	00	00000000	00	Char	Previous key version
PREVKEY	011	00	00	00000000	00	Char	Previous DES key
ENCRYPT	012	00	00	00000004	55	Char	Encryption types for SETROPTS KERBLVL(1)
Following is the PROXY segment of the GENERAL template							
PROXY	001	00	00	00000000	00		Start of segment fields
LDAPHOST	002	00	00	00000000	00	Char	LDAP server URL; maximum length: 1023
BINDDN	003	00	00	00000000	00	Char	Bind distinguished name; maximum length: 1023
BINDPW	004	00	08	00000000	00	Char	Bind password;maximum length: 128
BINDPWKY	005	00	08	00000071	00	Char	Bind password mask or encrypt key
Following is the EIM segment of the GENERAL template							
DOMAINDN	1	00	00	00000000	00	Char	EIM Domain Distinguished Name
OPTIONS	2	00	00	00000004	55	Char	EIM Options
LOCALREG	3	00	00	00000000	00	Char	Local Registry Name

Reserved templates for the RACF database

Five unused templates are defined for future use. The installation must leave this space reserved and not use it.

The contents of the reserved templates are:

Template Field Name (Character Data)	Field ID	Flag 1	Flag 2	Field Length Decimal	Default Value	Type	Field Being Described
RSVTMP0x	001	00	00	00000000	00		'x' can range from 2 to 6.
ENTYPE	002	00	00	00000001	00		The number corresponding to the type of profile being described.
VERSION	003	00	00	00000001	00		Template version number.

Appendix C. System Authorization Facility (SAF) and SAF Exits

System Authorization Facility (SAF)

The system authorization facility (SAF) provides an installation with centralized control over system security processing through a system service called the MVS router. The MVS router provides a focal point for all products that provide resource management. The resource management components and subsystems call the MVS router as part of security decision-making functions in their processing, such as access control checking and authorization-related checking. These functions are called “control points”. SAF supports the use of common control points across products and across systems.

To use the MVS router, a resource management component or subsystem issues the RACROUTE macro. The RACROUTE macro accepts all valid parameters for any of the independent RACF system macros (RACDEF, RACINIT, RACHECK, RACLIST, RACXTRT, and FRACHECK). RACROUTE verifies that only valid parameters have been coded and then passes the parameters to the MVS router.

The RACROUTE macro invokes the MVS router. When it is invoked, the MVS router first calls an optional installation exit routine and then calls the external security product (such as RACF), if one is active and installed on the system, as shown in the illustration that follows.

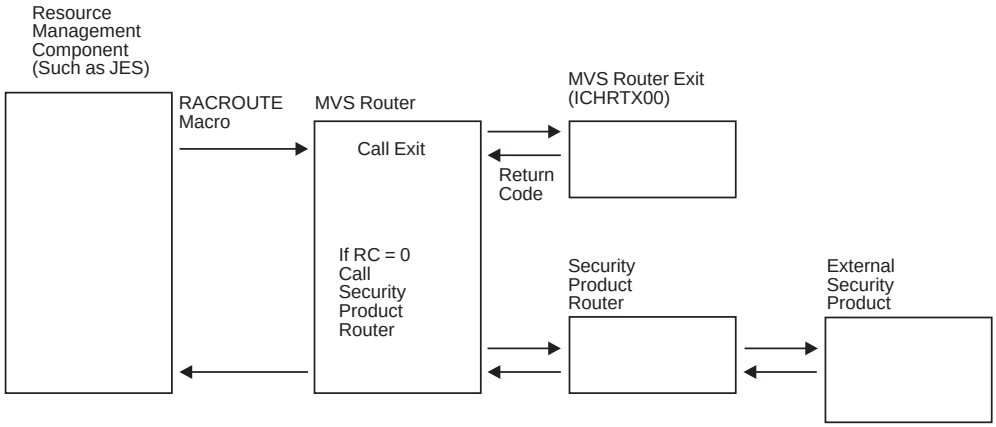

If an external security product is not available, you can use the MVS router exit as an installation-written security processing (or routing) routine. If an external security product is available, you can use the MVS router exit as a preprocessing exit routine for the security product. The MVS router exit routine is ICHRTX00.

After system initialization is complete, ICHRTX00 receives control for all subsequent requests for the duration of the IPL. See “Programming considerations” on page 388 for information on coding ICHRTX00.

Exit routine environment

ICHRTX00 receives control in the following environment:

- Is entered through a branch and link macro. Therefore, the exit routine runs in the same key and state as the issuer of the RACROUTE macro.
- Enabled for interrupts.

© Copyright IBM Corp. 1994, 2002

- Must be link-edited with AMODE(ANY) and RMODE(24).
- With no locks held, except the LOCAL lock can be held when REQUEST=FASTAUTH, and CLASS=PROGRAM, REQSTOR=PADSCHK and SUBSYS=CONTENTS are specified. When called with the LOCAL lock held, the exit must not release the lock.
- Caller's address space.
- Can be invoked in SRB mode. If the routine is invoked in SRB mode, the exit routine must follow SRB conventions.

An installation must provide its own recovery routine for ICHRTX00. If the exit routine terminates abnormally, the recovery routine gets control first.

Exit routine processing

Normally, a caller invokes the MVS router and passes it class, requester, and subsystem parameters through the RACROUTE parameter list. Using those parameters, the MVS router invokes ICHRTX00. ICHRTX00 returns to the MVS router with a return code that indicates whether further security processing is to occur.

If the return code is 0, the MVS router invokes the external security product by calling its router, ICHRFR00. ICHRFR00 then invokes the other external security product processing and reports the results of that invocation to the MVS router by placing a return code in register 15 and the detailed RACF-compatible return and reason codes in the first and second words (respectively) of the RACROUTE parameter list. For more information on the return codes the exit routine can set, see "Return codes from the SAF router exits (ICHRTX00 and ICHRTX01)" on page 391.

If automatic direction of application updates is active, some macro requests are propagated to other systems. If this is the case at your installation, you might need to coordinate exit processing to avoid duplicate update requests. If a RACROUTE was propagated, the exit might need to avoid propagating the request if it was already propagated by the originating system's exit. Check the propagation bit in the associated RACROUTE parameter list and avoid duplicate update requests.

Programming considerations

ICHRTX00 must be reentrant.

In addition to the address of the RACROUTE parameter list, ICHRTX00 also receives the address of a 152-byte work area.

SAF performs functions other than being a router, such as creating security tokens for certain RACROUTE request types, propagating user IDs, and creating default control blocks (ACEEs) when an external security product is not available to the system. IBM recommends that, in coding ICHRTX00, you do not bypass these SAF functions. SAF creates and returns control blocks (tokens or ACEEs) whenever the following RACROUTE request types are issued:

- REQUEST=VERIFYX
- REQUEST=TOKENMAP
- REQUEST=TOKENXTR
- REQUEST=TOKENBLD

SAF also creates default ACEEs for REQUEST=VERIFY when an external security product is not available on the system. System code, such as JES, requires these control blocks. Therefore, if your ICHRTX00 exit routine bypasses SAF security

functions, your installation must construct and return the control blocks that SAF would have created. If you do not provide the required control blocks, problems can result. The token fields are mapped by macro ICHRUTKN (data area RUTKN). See *z/OS Security Server RACF Data Areas* for a mapping of the RUTKN data area.

SAF router exit

The system authorization facility (SAF) and the SAF router are present on all MVS systems, even if RACF is not installed. Although the SAF router is not part of RACF, many system components and programs invokes RACF through the RACROUTE macro and SAF. Therefore, installations can modify RACF parameter lists and do customized security processing within the SAF router.

Depending on the level of JES programming support available on your system, JES can invoke the system authorization facility (SAF) after it reads a job. JES issues the RACROUTE macro with the REQUEST=VERIFY and ENVIR=VERIFY parameters. This invocation of SAF does not result in a call to RACF; it provides an opportunity for the installation to install its own user ID verification with the SAF router exit.

The router exit must have RMODE(24) and AMODE(ANY).

SAF exits (ICHRTX00 and ICHRTX01)

The system authorization facility (SAF) provides an installation with centralized control over system security processing by using a system service called the SAF router. It is not a part of the RACF program product. The SAF router provides a focal point and a common system interface for all products providing resource control.

Considerations

The resource-managing components and subsystems call the SAF router as part of certain decision-making functions in their processing, such as access-control checking and authorization-related checking. These functions are called “control points.” This single SAF interface encourages the sharing of common control functions across products and across systems.

The SAF router is always present, whether RACF is present or not. If RACF is available on the system, the SAF router can pass control to the RACF router (ICHRFR00) that invokes the appropriate RACF function. The parameter information and the RACF router table (modules ICHRFR01 and ICHRFR0X), which associates router invocations with RACF functions, determine the appropriate function. Before the RACF router is called, the SAF router calls one of the optional, installation-supplied, security-processing exits if one has been installed.

When a program invokes the RACROUTE macro, the SAF router calls one of the two router exits, ICHRTX00 or ICHRTX01. If the installation has not supplied the exits or if the exit return code indicates a call to RACF, the SAF router calls the RACF router to process the request.

Control points that issue the RACROUTE macro instruction enter the SAF router in the same key and state as the RACROUTE issuer. Control points that continue to issue the independent RACF system macros (such as RACHECK and RACDEF) go directly to RACF, bypassing the router.

Special care must be taken with the SAF router exits ICHRTX00 and ICHRTX01. These exits can be invoked by callers running in any key or system mode, and running in either 31-bit or 24-bit addressing mode. These exits must be capable of running in either 31-bit or 24-bit addressing mode, and must be marked AMODE(ANY), RMODE(24). ICHRTX00 can be invoked by callers in SRB mode or cross-memory mode and can be invoked with the LOCAL lock held; be sure to consider these factors if you use this exit. ICHRTX01 is invoked early (at MVS initialization), which is a constantly changing environment. It is recommended that you not use this exit.

SAF router exits (ICHRTX00 and ICHRTX01)

The SAF router provides two optional installation exits, which are invoked whether or not RACF is installed and active on the system. If RACF is not available, the router exits might act as an installation-written security-processing (or routing) routine. If RACF is available, the exits act as a RACF preprocessing exit.

SAF initialization occurs early in the IPL, during the nucleus-initialization program (NIP). SAF Exit ICHRTX01 is the exit invoked starting at SAF initialization but before master-scheduler initialization (MSI). This exit enables installations to receive control in the restricted environment available during NIP to make early security decisions. During MSI, SAF exit ICHRTX00 replaces ICHRTX01 and is the SAF exit that is invoked from then on.

The SAF router exit routines can be called only by issuing the RACROUTE macro instruction. The exits are entered by a branch and link instruction and execute in the same key and state as the issuer of the RACROUTE macro. The exits can receive parameters that point to storage in a key different from the issuer of the RACROUTE. If the caller needs to access this storage, coding of the MODESET macro to switch to the key of this storage would be required in the exits. The exits must be named ICHRTX01 or ICHRTX00, and must be in the link-pack area (LPA). The router exit must be reentrant. The router passes the parameter list to the exit routines. In addition, the exits receive the address of a 152-byte work area.

With a RACROUTE REQUEST=FASTAUTH invocation from Contents Supervisor to the External Security Manager, a local lock is held if the CLASS parameter specifies PROGRAM, the REQSTOR parameter specifies PADSCHK, and the SUBSYS parameter specifies CONTENTS. The ICHRTX00 and ICHRTX01 exits that process this call must *not* release this lock and must *not* invoke system services that would fail due to the lock being held.

The exit must be sensitive to the environment that it is called in since it runs in that same environment. For example, CICS 4.1 issues a RACROUTE REQUEST=VERIFY,ENVIR=VERIFY in a non-authorized state, so ICHRTX00 cannot issue a RACROUTE (such as a RACROUTE REQUEST=VERIFY,ENVIR=CREATE) that needs to be authorized when it is processing this call. For more information, see “Exit routine requirements” on page 391.

Control points that continue to use the independent RACF system macros (such as FRACHECK and RACDEF) do not invoke the SAF router exit routines.

When a RACF callable service for z/OS UNIX invokes RACROUTE REQUEST=FASTAUTH for a resource in the UNIXPRIV class, the SAF router exit (ICHRTX00) is not invoked.

On MVS/XA and later releases, the exit must have RMODE(24) and AMODE(ANY).

On entry to the SAF router exit routines, register 1 contains the address of the following areas:

Offset	Length	Description
0	4	**Parameter-list address:** Pointer to the SAF router parameter. The SAF router parameter list (mapped by macro ICHSAFP) is generated when the RACROUTE macro is issued. It describes the security-processing request by providing the request type.
4	4	**Work-area address:** Pointer to a 152-byte work area that the exits can use.

Return codes from the SAF router exits (ICHRTX00 and ICHRTX01)

The exit routines return one of the following return codes (in hexadecimal form) in register 15:

Hex	(Decimal)	Meaning
0	(0)	The exit has completed successfully. Control proceeds to the RACF front-end routine for further security processing and an invocation of RACF.
C8	(200)	The exit has completed successfully. The SAF router translates this return code to a router return code of 0 and returns control to the issuer of the RACROUTE macro, bypassing RACF processing. (See the note below.)
CC	(204)	The exit has completed successfully. The SAF router translates this return code to a router return code of 4 and returns control to the issuer of the RACROUTE macro, bypassing RACF processing. (See the note below.)
D0	(208)	The exit has completed processing. The SAF router translates this return code to a router return code of 8 and returns control to the issuer of the RACROUTE macro, bypassing RACF processing. (See the note below.)
Other		If the exit routine sets any return code other than those described above, the SAF router returns control directly to the issuer of the RACROUTE macro and passes the untranslated code as the router return code. Further RACF processing is bypassed.

Exit routine processing

Normally, a caller, such as DFP, IMS, JES, for example, invokes the SAF router and passes it class, requester, and subsystem parameters by way of the RACROUTE exit parameter list. Using those parameters, the SAF router calls the router exit, which then returns to the router with a return code. If the return code is 0, as defined above, the router invokes RACF. RACF reports the results of that invocation to the router by entering return and reason codes in registers 15 and 0, respectively. The router converts the RACF return and reason codes to router return and reason codes and passes them to the caller. The router provides additional information to the caller by placing the unconverted RACF return and reason codes in the first and second words of the router input parameter list.

Exit routine requirements

Some RACROUTE requests are service request block (SRB) compatible or cross-memory compatible; that is, they can be issued by an SRB or in cross-memory mode. In addition, some requests are with the local lock held.

Before invoking a system service, a SAF exit must ensure that the service it intends to use is valid for the mode it is running in. For example, many services invoke SVC routines and cannot be used in SRB or cross-memory mode or with a lock held. Another example is cross-memory mode. RACROUTE calls, such as REQUEST=FASTAUTH and REQUEST=TOKENMAP, can be issued in cross-memory mode. A SAF exit cannot issue requests that violate cross-memory mode. One suggestion is that the SAF exit examine the request type in the SAF parameter list and base its processing on that value before it invokes any system service.

Using CICS as an example, CICS passes user installation data in the RACF parameter lists (with INSTLN=, where available) if ESMEXITS=INSTLN was specified as a CICS initialization parameter. The RACF parameter list, pointed to by the SAF parameter list which the exit receives, has a pointer to installation data supplied by the caller (in this case, CICS). The exit can determine that the caller is CICS from the installation data supplied and returned to SAF without taking any further actions.

Some products, such as CICS, can issue RACROUTE requests in a performance-sensitive path. If the exit causes a suspension of the caller (for example, a WAIT) then the performance of the caller might suffer. Therefore it is recommended that the exit does not cause suspension during the processing of such performance-sensitive RACROUTE calls.

Simulating a call to RACF

Instead of invoking RACF processing, your installation might choose to have the SAF router exit respond to the caller's request. If it does, you must still provide the caller with the RACF return and reason codes that it expects to receive. To do so, you must set the router-exit return code, as defined above, so that RACF is not invoked. However, you must still simulate the results of a RACF invocation by coding the exit so it places the RACF return and reason codes in the first and second fullwords, respectively, of the RACROUTE input parameter list.

Note: RACF return and reason codes are documented after the keyword parameter descriptions for the Standard Form of each request type in Chapter 2, "RACF system macros" on page 7.

JES handling of the return codes from SAF

The default return code of X'04' from SAF, which is always returned when no SAF router exit is installed (or when return code of X'CC' is issued from the router exit), causes the job to be queued for execution in the normal manner. That is, JES does user ID and password validation at initiator time.

When the installation has installed a SAF router exit (and within it logically selected the REQUEST=VERIFY, ENVIR=VERIFY call), a successful return code of X'00' can be returned to JES (by issuing a return code of X'C8' from the router exit). In this case, the job is queued for execution with the bypass-password-validation indicator set. As a result, password validation, password warning messages, and password-history updates are subsequently bypassed during RACF initialization processing.

The SAF router exit can also cause a failure return code of X'08' to be returned to JES (by issuing a return code of X'D0' from the router exit), in which case the job is failed immediately.

Note that if RACF is invoked with the RACINIT macro from the SAF router exit, a RACF abend could cause a JES abend if there is insufficient storage available for JES subtask-recovery termination processing.

SAF callable services router installation exit (IRRSXT00)

The SAF callable services router installation exit IRRSXT00 can be used to add to or replace the functions provided by RACF's callable services for z/OS UNIX.

IRRSXT00 is called each time a RACF callable service for z/OS UNIX is invoked. The exit is called both before and after RACF is called. When IRRSXT00 is called before RACF, the exit can request that RACF not be called.

For more information about the installation exit IRRSXT00, see *z/OS Security Server RACF Callable Services*.

Appendix D. SAF interface to an external security product

Security product router

The following is guidance information for programmers implementing a non-RACF external security-manager product.

If RACF is not present in the system, an installation can use an external (non-RACF) security product to provide system-security functions. An external security product supplies a security-product router module to handle security requests from SAF.

When a control point issues the RACROUTE macro to request a security function that is not completely processed by SAF, the SAF router passes control to the security-product router.

SAF completely processes the following:

- REQUEST=TOKENMAP, REQUEST=TOKENBLD, and REQUEST=TOKENXTR.
- REQUEST=VERIFY when building or deleting ACEEs for trusted-system address spaces.
- REQUEST=VERIFYX for trusted-system address spaces.
- REQUEST=VERIFYX and REQUEST=VERIFY when the security product is not installed, or is not active. (In this case, a default UTOKEN is created and the ACEERACF bit is off.)

SAF also partially processes REQUEST=VERIFYX.

For example, SAF:

- Performs user ID propagation for batch jobs to be executed on the local node.
- Performs user ID propagation during spool-reload functions of JES when the security product does not support the RACF 1.9 work-unit identity functions (that is, when RCVTWUID is off).
- Turns a VERIFYX into a VERIFY with ENVIR=CREATE, which it then calls the security-product router module to perform. SAF extracts the UTOKEN from the ACEE and calls the security-product router module to do a VERIFY with ENVIR=DELETE.

In general, SAF processing or partial processing of requests should be transparent to the security product. When SAF completely processes the request, the security product is not called. When SAF does not do any processing for the request, it calls the security-product router to do the processing required for that request type and those parameters. When SAF partially processes the request, it modifies the request type and the parameters when necessary, and calls the security-product router to do the appropriate processing as needed for the resulting request type and parameters.

The external security product must place the address of the security-product router module (which must be in common storage) into field SAFVRACR in the router vector table (mapped by ICHSAFV). The router vector table is built during SAF initialization, but the field SAFVRACR should be filled during the initialization of the external product. The following illustrates the location of field SAFVRACR.

© Copyright IBM Corp. 1994, 2002

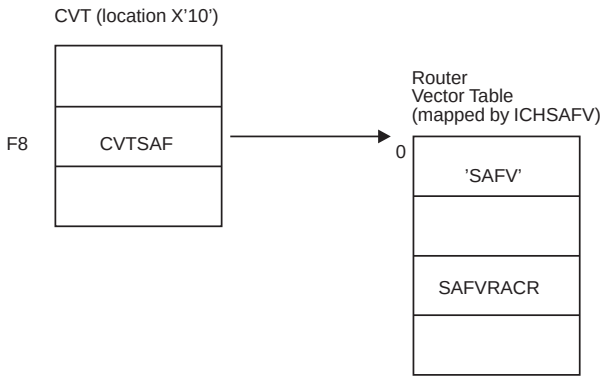

Requirements for the security product router

The following general requirements apply for the security-product router module.

Authorization: Supervisor state or problem state, in any PSW key. Generally, this is the state and key of the RACROUTE issuer. However, if SAF is partially processing the request (as explained above), SAF might have switched to supervisor state and key 0 before calling the security-product router.

Dispatchable unit mode: Task mode or SRB mode, as determined by the issuer of RACROUTE.

Cross-memory mode: PASN = HASN = SASN except for:
RACROUTE REQUEST=TOKNMAP with XMREQ=YES
RACROUTE REQUEST=TOKNXTR with XMREQ=YES
RACROUTE REQUEST=FASTAUTH

Amode: 24-bit or 31-bit, as determined by the issuer of RACROUTE

ASC mode: Primary

Locks: No locks held, except the LOCAL lock can be held when REQUEST=FASTAUTH, and CLASS=PROGRAM, REQSTOR=PADSCHK and SUBSYS=CONTENTS are specified. When called with the LOCAL lock held, the security product must not release the lock.

Linkage conventions: Standard

Input parameters to the security product router

On entry to the security-product router module, register 1 contains the address of the following areas:

Offset	Length	Description
0	4	**Parameter-list address** points to the RACROUTE parameter list (mapped by macro ICHSAFP). See data area SAFP in "SAFP: SAF Router Parameter List" in *z/OS Security Server RACF Data Areas*.

Offset	Length	Description
4	4	**Work-area address** points to the RACROUTE parameter list (mapped by macro ICHSAFP). See data area SAFP in "SAFP: SAF Router Parameter List" in *z/OS Security Server RACF Data Areas*.

The field SAFPRACP in the RACROUTE parameter list contains the offset from the base address of ICHSAFP to the request-specific portion of the parameter list. The format of the request-specific portions varies, depending on the REQUEST= parameter coded on the RACROUTE invocation. The following table shows which request-specific parameter list is assigned to each REQUEST= keyword:

Table 22. RACROUTE Macro Keywords and Their Request-Specific Parameter Lists

RACROUTE REQUEST Type	Request-Specific Parameter List
REQUEST=AUDIT	AUL
REQUEST=AUTH	ACHKL
REQUEST=DEFINE	RDDFL
REQUEST=DIRAUTH	DAUT
REQUEST=EXTRACT	RXTL
REQUEST=FASTAUTH	FAST
REQUEST=LIST	RLST
REQUEST=SIGNON	SGNPL
REQUEST=STAT	STAT
REQUEST=TOKENBLD	RIPL
REQUEST=TOKENMAP	TSRV
REQUEST=TOKENXTR	TSRV
REQUEST=VERIFY	RIPL
REQUEST=VERIFYX	RIPL

The parameter lists exhibited in the previous tables are illustrated in *z/OS Security Server RACF Data Areas*. See this text for details on the format of these parameter lists.

Exit conditions from the security product router

On exit from the security-product router module and return to the SAF router:

- Register 15 contains one of the following return codes:

Hex (Decimal)	Meaning
0 (0)	The requested function completed successfully.
4 (4)	The requested function was not processed.
8 (8)	The requested function was processed, and failed.

- The RACROUTE parameter list (SAFP) contains the function return code in field SAFPRRET and the function reason code in field SAFPRREA for the requested function.
- Register 1 can contain the address of a data area returned by the RACROUTE invocation. See each specific RACROUTE request type for details.

Programming considerations

When an external security product processes a RACROUTE REQUEST=VERIFY,ENVIR=CREATE request, SAF expects the product to build data area ACEE, which is mapped by macro IHAACEE. The ACEE address should be returned as follows:

- If the RACROUTE REQUEST=VERIFY specified the ACEE= keyword, the address of the ACEE should be returned in the word specified by the ACEE= keyword;
- Otherwise, the address should be returned in the TCB field TCBSENV. If the ASXB field ASXBSENV is 0, the address should be returned in ASXBSENV, too. Note that ACEEs whose addresses are in TCBSENV or ASXBSENV must be created in storage located below 16MB.

For token processing, SAF uses field ACEETOKP to reference the token. Token processing is not required but, to be fully compatible with MVS, the security product should create a version 2 ACEE when invoked for RACROUTE REQUEST=VERIFY,ENVIR=CREATE, and should create a token and place its address in ACEETOKP. A security product that is prepared to do this should also set RCVTWUID on to indicate to SAF that it understands token processing and can handle all the token-related fields on a REQUEST=VERIFY call to the security-product router.

In order to be compatible with SAF and various IBM program products, the security product should fill in any field in the ACEE that is listed as a General-Use Programming Interface, with the exception of ACEEFCGP.

In order to be compatible with SAF and various IBM program products, the security product should also process any of the RACROUTE requests and keywords that are listed as General-Use Programming Interfaces, and should provide the same return codes and reason codes as RACF would. If the security product cannot process a specific function, it should return a 4 in register 15, and should set the SAFPRRET and SAFPRREA fields to 0. However, the issuer of the RACROUTE macro is free to interpret return code 4 as desired, and can decide either to accept or to fail the processing that caused the RACROUTE to be issued.

A product can issue some RACROUTE requests in a non-authorized state. The security product must be sensitive to such calls and only invoke services that are allowed in the issuer's current state. In addition, some RACROUTE requests might be in a performance-sensitive path. If the security product causes a suspension of the caller (for example, a WAIT) then the performance of the caller might suffer. An example of this is CICS, which issues a RACROUTE REQUEST=VERIFY,ENVIR=VERIFY in a non-authorized state and in a performance-sensitive path.

In general, a product that issues RACROUTE should document the minimum level of RACF that is required for the product to work correctly, and any other security product that a customer wishes to use must supply at a minimum the functions that level of RACF would supply. Also, where data is being returned, the data should be in the same format as RACF would return it. The exceptions to this are:

- For RACROUTE REQUEST=EXTRACT,TYPE=EXTRACT or TYPE=REPLACE, the RELEASE=1.8 capabilities of FIELDS= do not have to be supported when the segment name specified or implied is BASE. Other segment names (such as DFP and TSO) should be supported, however, for compatibility with the RACF releases that support those segments.

In order to be further compatible with SAF and various IBM program products, the security product should fill in any field in the RCVT, which is listed as a General-Use Programming Interface. This includes the fields RCVTREXP and RCVTFRCP, which are used by the RACSTAT and FRACHECK macros. The security product should also assume that references to RACF in the general-use fields apply to other security products as well. For example, RCVTRNA, which is described as “RACF not active”, should be interpreted as “Security product not active”.

Also, although the preferred interface for security services is through RACROUTE, the security product should support the SVC-entered functions RACHECK, RACDEF, RACINIT, RACLIST, and RACXTRT. It should also support the branch-entered functions FRACHECK and RACSTAT. It is not necessary to support the ICHEINTY service, which is described in *z/OS Security Server RACF Macros and Interfaces*.

SAF Callable Services Router Installation exit (IRRSXT00) for z/OS UNIX callable services

The SAF callable services router installation exit IRRSXT00 can be used to add to or replace the functions provided by RACF’s callable services for z/OS UNIX.

IRRSXT00 is called each time a RACF callable service for z/OS UNIX is invoked. The exit is called both before and after RACF is called. When IRRSXT00 is called before RACF, the exit can request that RACF not be called.

An installation implementing z/OS UNIX security support provides its own version of the RACF module that is called by SAF callable services router. The address of this module must be placed into field SAFVXIT2 in the SAF vector table (mapped by ICHSAFV).

For more information about the installation exit IRRSXT00, see *z/OS Security Server RACF Callable Services*.

Appendix E. IBM-supplied class descriptor table entries

NOT programming interface information

- DFTUACC
- GENLIST
- OPER
- POSIT
- RACLIST
- RACLREQ
- RVRSMAC
- SLBLREQ

End of NOT programming interface information

Table 23 lists the class entries supplied by IBM in the class descriptor table (ICHRRCDX). Other classes can be added to the class descriptor table (CDT) by your installation.

If you share a database between MVS and VM systems, you can use the VM classes in the CDT.

Table 23. Classes Supplied by IBM

Class		
ACCTNUM	POSIT=126	OTHER=ANY
	RACLIST=ALLOWED	MAXLNTH=39
	GENLIST=DISALLOWED	
		DFTUACC=NONE
	OPER=NO	
		ID=46
	FIRST=ANY	
ACICSPCT	POSIT=5	OTHER=ANY
		MAXLNTH=13
		DFTUACC=NONE
	GROUP=BCICSPCT	
	OPER=NO	
		ID=37
	FIRST=ANY	

© Copyright IBM Corp. 1994, 2002

Table 23. Classes Supplied by IBM (continued)

Class		
AIMS	POSIT=4	OTHER=ALPHANUM
		MAXLNTH=8
		DFTUACC=NONE
	OPER=NO	
		ID=11
	FIRST=ALPHA	
ALCSAUTH	POSIT=548	OTHER=ANY
	RACLIST=ALLOWED	MAXLNTH=62
	GENLIST=DISALLOWED	DFTRETC=4
	RACLREQ=NO	DFTUACC=NONE
	OPER=NO	
	PROFDEF=YES	ID=1
	FIRST=ANY	
APPCLU	POSIT=118	OTHER=ANY
	RACLIST=DISALLOWED	MAXLNTH=35
	GENLIST=DISALLOWED	
		DFTUACC=NONE
	OPER=NO	
		ID=57
	FIRST=ALPHA	
APPCPORT	POSIT=87	OTHER=ANY
	RACLIST=ALLOWED	MAXLNTH=8
	GENLIST=DISALLOWED	DFTRETC=4
	RACLREQ=NO	DFTUACC=NONE
		SLBLREQ=YES
		RVRSMAC=YES
	OPER=NO	
	PROFDEF=YES	ID=98
	FIRST=ALPHA	MAXLENX=17
APPCSERV	POSIT=84	OTHER=ANY
	RACLIST=ALLOWED	MAXLNTH=73
	GENLIST=DISALLOWED	DFTRETC=8
	RACLREQ=YES	DFTUACC=NONE
		SLBLREQ=YES
	OPER=NO	
	PROFDEF=YES	ID=105
	FIRST=ALPHANUM	

Table 23. Classes Supplied by IBM (continued)

Class		
APPCSI	POSIT=88	OTHER=ANY
	RACLIST=ALLOWED	MAXLNTH=26
	GENLIST=DISALLOWED	DFTRETC=4
	RACLREQ=NO	DFTUACC=READ
	OPER=NO	
	PROFDEF=YES	ID=97
	FIRST=ALPHANUM	
APPCTP	POSIT=89	OTHER=ANY
	RACLIST=ALLOWED	MAXLNTH=82
	GENLIST=DISALLOWED	DFTRETC=8
	RACLREQ=YES	DFTUACC=NONE
		SLBLREQ=YES
	OPER=NO	
	PROFDEF=YES	ID=96
	FIRST=ALPHANUM	
APPL	POSIT=3	OTHER=ALPHANUM
	RACLIST=ALLOWED	MAXLNTH=8
	GENLIST=ALLOWED	
		DFTUACC=NONE
	OPER=NO	
		ID=8
	FIRST=ALPHA	
BCICSPCT	POSIT=5	OTHER=ANY
		MAXLNTH=13
		DFTUACC=NONE
	MEMBER=ACICSPCT	
	OPER=NO	
		ID=38
	FIRST=ANY	
CACHECLS	POSIT=569	OTHER=ANY
	RACLIST=DISALLOWED	MAXLNTH=16
	GENLIST=DISALLOWED	DFTRETC=4
	RACLREQ=NO	DFTUACC=NONE
		SLBLREQ=NO
	OPER=NO	
	PROFDEF=YES	ID=1
	FIRST=ALPHANUM	

Table 23. Classes Supplied by IBM (continued)

Class		
CBIND	POSIT=545	OTHER=ANY
	RACLIST=ALLOWED	MAXLNTH=41
		DFTRETC=8
	OPER=NO	
		ID=1
	FIRST=ALPHANUM	
CCICSCMD	POSIT=5	OTHER=ANY
		MAXLNTH=21
		DFTUACC=NONE
	GROUP=VCICSCMD	
	OPER=NO	
		ID=52
	FIRST=ANY	
CIMS	POSIT=93	OTHER=ALPHANUM
	RACLIST=DISALLOWED	MAXLNTH=8
	GENLIST=DISALLOWED	
		DFTUACC=NONE
	GROUP=DIMS	
	OPER=NO	
		ID=88
	FIRST=ALPHA	
CONSOLE	POSIT=107	OTHER=ANY
	RACLIST=ALLOWED	MAXLNTH=8
	GENLIST=DISALLOWED	DFTRETC=8
		DFTUACC=NONE
		RVRSMAC=YES
	OPER=NO	
		ID=68
	FIRST=ANY	
CPSMOBJ	POSIT=57	OTHER=ANY
	RACLIST=ALLOWED	MAXLNTH=44
	GENLIST=ALLOWED	
	GROUP=GCPSMOBJ	
	OPER=NO	
		ID=1
	FIRST=ANY	

Table 23. Classes Supplied by IBM (continued)

Class		
CPSMXMP	POSIT=11	OTHER=ANY
	RACLIST=ALLOWED	MAXLNTH=44
	OPER=NO	
		ID=1
	FIRST=ANY	
CSFKEYS	POSIT=98	OTHER=ANY
	RACLIST=ALLOWED	MAXLNTH=73
	GENLIST=DISALLOWED	DFTRETC=4
	RACLREQ=YES	DFTUACC=NONE
	GROUP=GCSFKEYS	
	OPER=NO	
		ID=100
	FIRST=ALPHA	
CSFSERV	POSIT=98	OTHER=ALPHANUM
	RACLIST=ALLOWED	MAXLNTH=8
	GENLIST=DISALLOWED	DFTRETC=4
	RACLREQ=YES	DFTUACC=NONE
	OPER=NO	
		ID=99
	FIRST=ALPHA	
DASDVOL	POSIT=0	OTHER=ALPHANUM
	RACLIST=ALLOWED	MAXLNTH=6
	GENLIST=ALLOWED	
	GROUP=GDASDVOL	
	OPER=YES	
		ID=5
	FIRST=ALPHANUM	
DBNFORM	POSIT=59	OTHER=ALPHANUM
	RACLIST=ALLOWED	MAXLNTH=8
		DFTUACC=NONE
	OPER=NO	
		ID=1
	FIRST=ALPHANUM	

Table 23. Classes Supplied by IBM (continued)

Class		
DCEUUIDS	POSIT=544	OTHER=ANY
	RACLIST=ALLOWED	MAXLNTH=73
	GENLIST=ALLOWED	DFTRETC=8
		DFTUACC=NONE
	OPER=NO	
		ID=1
	FIRST=ALPHANUM	
DCICSDCT	POSIT=5	OTHER=ANY
		MAXLNTH=13
		DFTUACC=NONE
	GROUP=ECICSDCT	
	OPER=NO	
		ID=31
	FIRST=ANY	
DEVICES	POSIT=115	OTHER=ANY
	RACLIST=ALLOWED	MAXLNTH=39
	GENLIST=DISALLOWED	DFTRETC=4
	RACLREQ=YES	DFTUACC=NONE
		SLBLREQ=YES
	OPER=NO	
		ID=60
	FIRST=ANY	
DIGTCERT	POSIT=550	OTHER=ANY
	RACLIST=ALLOWED	MAXLNTH=246
	GENLIST=DISALLOWED	DFTRETC=4
	RACLREQ=NO	DFTUACC=NONE
	OPER=NO	KEYQUAL=0
		ID=1
	FIRST=ANY	
DIGTCRIT	POSIT=563	OTHER=ANY
	RACLIST=ALLOWED	MAXLNTH=246
	GENLIST=DISALLOWED	DFTRETC=4
	RACLREQ=YES	DFTUACC=NONE
	OPER=NO	KEYQUAL=0
		ID=1
	FIRST=ANY	

Table 23. Classes Supplied by IBM (continued)

Class		
DIGTNMAP	POSIT=563	OTHER=ANY
	RACLIST=ALLOWED	MAXLNTH=246
	GENLIST=DISALLOWED	DFTRETC=4
	RACLREQ=YES	DFTUACC=NONE
	OPER=NO	KEYQUAL=0
		ID=1
	FIRST=ANY	
DIGTRING	POSIT=550	OTHER=ANY
	RACLIST=ALLOWED	MAXLNTH=246
	GENLIST=DISALLOWED	DFTRETC=4
	RACLREQ=NO	DFTUACC=NONE
	OPER=NO	KEYQUAL=0
		ID=1
	FIRST=ANY	
DIMS	POSIT=93	OTHER=ALPHANUM
	RACLIST=ALLOWED	MAXLNTH=8
	GENLIST=DISALLOWED	
		DFTUACC=NONE
	MEMBER=CIMS	
	OPER=NO	
		ID=89
	FIRST=ALPHA	
DIRACC	POSIT=71	OTHER=ANY
	RACLIST=DISALLOWED	MAXLNTH=246
	GENLIST=DISALLOWED	DFTRETC=8
		DFTUACC=NONE
	OPER=NO	
	PROFDEF=NO	ID=107
	FIRST=ANY	
DIRAUTH	POSIT=105	OTHER=ANY
	RACLIST=DISALLOWED	MAXLNTH=8
	GENLIST=DISALLOWED	DFTRETC=8
		DFTUACC=NONE
	OPER=NO	
	PROFDEF=NO	ID=70
	FIRST=ANY	

Table 23. Classes Supplied by IBM (continued)

Class		
DIRECTRY	POSIT=95	OTHER=ANY
	RACLIST=DISALLOWED	MAXLNTH=153
	GENLIST=DISALLOWED	DFTRETC=8
		DFTUACC=NONE
		SLBLREQ=YES
	OPER=YES	KEYQUAL=2
		ID=86
	FIRST=ANY	
DIRSRCH	POSIT=70	OTHER=ANY
	RACLIST=DISALLOWED	MAXLNTH=246
	GENLIST=DISALLOWED	DFTRETC=8
		DFTUACC=NONE
	OPER=NO	
	PROFDEF=NO	ID=106
	FIRST=ANY	
DLFCLASS	POSIT=92	OTHER=ANY
	RACLIST=ALLOWED	MAXLNTH=64
	GENLIST=DISALLOWED	
		DFTUACC=NONE
	OPER=NO	
		ID=90
	FIRST=ALPHA	
DSNADM	POSIT=539	OTHER=ANY
	RACLIST=DISALLOWED	MAXLNTH=100
	GENLIST=DISALLOWED	DFTRETC=4
	RACLREQ=NO	DFTUACC=NONE
		SLBLREQ=NO
	OPER=NO	
	PROFDEF=YES	ID=1
	FIRST=ANY	
DSNR	POSIT=7	OTHER=ANY
	RACLIST=ALLOWED	MAXLNTH=39
	GENLIST=DISALLOWED	
	OPER=NO	
		ID=18
	FIRST=ALPHANUM	

Table 23. Classes Supplied by IBM (continued)

Class		
ECICSDCT	POSIT=5	OTHER=ANY
		MAXLNTH=13
		DFTUACC=NONE
	MEMBER=DCICSDCT	
	OPER=NO	
		ID=32
	FIRST=ANY	
EJBROLE	POSIT=568	OTHER=ANY
	RACLIST=ALLOWED	MAXLNTH=246
	GENLIST=DISALLOWED	DFTRETC=4
	RACLREQ=NO	DFTUACC=NONE
	GROUP=GEJBROLE	SLBLREQ=NO
	OPER=NO	
	PROFDEF=YES	ID=1
	FIRST=ANY	CASE=ASIS
FACILITY	POSIT=8	OTHER=ANY
	RACLIST=ALLOWED	MAXLNTH=39
	GENLIST=ALLOWED	
		DFTUACC=NONE
	OPER=NO	
		ID=19
	FIRST=ANY	
FCICSFCT	POSIT=5	OTHER=ANY
	RACLIST=ALLOWED	MAXLNTH=17
		DFTUACC=NONE
	GROUP=HCICSFCT	
	OPER=NO	
		ID=27
	FIRST=ANY	
FIELD	POSIT=121	OTHER=ANY
	RACLIST=ALLOWED	MAXLNTH=26
	GENLIST=ALLOWED	
		DFTUACC=NONE
	RACLREQ=YES	
	OPER=NO	
		ID=51
	FIRST=ALPHA	

Table 23. Classes Supplied by IBM (continued)

Class		
FILE	POSIT=94	OTHER=ANY
	RACLIST=DISALLOWED	MAXLNTH=171
	GENLIST=DISALLOWED	DFTRETC=8
		DFTUACC=NONE
		SLBLREQ=YES
	OPER=YES	KEYQUAL=2
		ID=87
	FIRST=ANY	
FIMS	POSIT=101	OTHER=ALPHANUM
	RACLIST=DISALLOWED	MAXLNTH=8
	GENLIST=DISALLOWED	
		DFTUACC=NONE
	GROUP=HIMS	
	OPER=NO	
		ID=79
	FIRST=ALPHANUM	
FSOBJ	POSIT=72	OTHER=ANY
	RACLIST=DISALLOWED	MAXLNTH=246
	GENLIST=DISALLOWED	DFTRETC=8
		DFTUACC=NONE
	OPER=NO	
	PROFDEF=NO	ID=108
	FIRST=ANY	
FSSEC	POSIT=73	OTHER=ANY
	RACLIST=DISALLOWED	MAXLNTH=246
	GENLIST=DISALLOWED	DFTRETC=8
		DFTUACC=NONE
	OPER=NO	
	PROFDEF=NO	ID=109
	FIRST=ANY	
GCICSTRN	POSIT=5	OTHER=ANY
		MAXLNTH=13
		DFTUACC=NONE
	MEMBER=TCICSTRN	
	OPER=NO	
		ID=13
	FIRST=ANY	

Table 23. Classes Supplied by IBM (continued)

Class		
GCPSMOBJ	POSIT=57	OTHER=ANY
		MAXLNTH=246
	MEMBER=CPSMOBJ	
	OPER=NO	
		ID=1
	FIRST=ANY	
GCSFKEYS	POSIT=98	OTHER=NONATNUM
	RACLIST=DISALLOWED	MAXLNTH=17
	GENLIST=DISALLOWED	DFTRETC=4
	RACLREQ=NO	DFTUACC=NONE
	MEMBER=CSFKEYS	
	OPER=NO	
		ID=101
	FIRST=NONATABC	
GDASDVOL	POSIT=0	OTHER=ALPHANUM
		MAXLNTH=6
	MEMBER=DASDVOL	
	OPER=YES	
		ID=39
	FIRST=ALPHANUM	
GDSNBP	POSIT=536	OTHER=ANY
	RACLIST=DISALLOWED	MAXLNTH=100
	GENLIST=DISALLOWED	DFTRETC=4
	RACLREQ=NO	DFTUACC=NONE
		SLBLREQ=NO
	MEMBER=MDSNBP	
	OPER=NO	
	PROFDEF=YES	ID=1
	FIRST=ANY	
GDSNCL	POSIT=538	OTHER=ANY
	RACLIST=DISALLOWED	MAXLNTH=100
	GENLIST=DISALLOWED	DFTRETC=4
	RACLREQ=NO	DFTUACC=NONE
		SLBLREQ=NO
	MEMBER=MDSNCL	
	OPER=NO	
	PROFDEF=YES	ID=1
	FIRST=ANY	

Table 23. Classes Supplied by IBM (continued)

Class		
GDSNDB	POSIT=528	OTHER=ANY
	RACLIST=DISALLOWED	MAXLNTH=100
	GENLIST=DISALLOWED	DFTRETC=4
	RACLREQ=NO	DFTUACC=NONE
		SLBLREQ=NO
	MEMBER=MDSNDB	
	OPER=NO	
	PROFDEF=YES	ID=1
	FIRST=ANY	
GDSNJR	POSIT=567	OTHER=ANY
	RACLIST=DISALLOWED	MAXLNTH=100
	GENLIST=DISALLOWED	DFTRETC=4
	RACLREQ=NO	DFTUACC=NONE
		SLBLREQ=NO
	MEMBER=MDSNJR	
	OPER=NO	
	PROFDEF=YES	ID=1
	FIRST=ANY	
GDSNPK	POSIT=534	OTHER=ANY
	RACLIST=DISALLOWED	MAXLNTH=100
	GENLIST=DISALLOWED	DFTRETC=4
	RACLREQ=NO	DFTUACC=NONE
		SLBLREQ=NO
	MEMBER=MDSNPK	
	OPER=NO	
	PROFDEF=YES	ID=1
	FIRST=ANY	
GDSNPN	POSIT=533	OTHER=ANY
	RACLIST=DISALLOWED	MAXLNTH=100
	GENLIST=DISALLOWED	DFTRETC=4
	RACLREQ=NO	DFTUACC=NONE
		SLBLREQ=NO
	MEMBER=MDSNPN	
	OPER=NO	
	PROFDEF=YES	ID=1
	FIRST=ANY	
GDSNSC	POSIT=562	OTHER=ANY
	RACLIST=DISALLOWED	MAXLNTH=100
	GENLIST=DISALLOWED	DFTRETC=4
	RACLREQ=NO	DFTUACC=NONE
		SLBLREQ=NO
	MEMBER=MDSNSC	
	OPER=NO	
	PROFDEF=YES	ID=1
	FIRST=ANY	

Table 23. Classes Supplied by IBM (continued)

Class		
GDSNSG	POSIT=537	OTHER=ANY
	RACLIST=DISALLOWED	MAXLNTH=100
	GENLIST=DISALLOWED	DFTRETC=4
	RACLREQ=NO	DFTUACC=NONE
		SLBLREQ=NO
	MEMBER=MDSNSG	
	OPER=NO	
	PROFDEF=YES	ID=1
	FIRST=ANY	
GDSNSM	POSIT=535	OTHER=ANY
	RACLIST=DISALLOWED	MAXLNTH=100
	GENLIST=DISALLOWED	DFTRETC=4
	RACLREQ=NO	DFTUACC=NONE
		SLBLREQ=NO
	MEMBER=MDSNSM	
	OPER=NO	
	PROFDEF=YES	ID=1
	FIRST=ANY	
GDSNSP	POSIT=561	OTHER=ANY
	RACLIST=DISALLOWED	MAXLNTH=100
	GENLIST=DISALLOWED	DFTRETC=4
	RACLREQ=NO	DFTUACC=NONE
		SLBLREQ=NO
	MEMBER=MDSNSP	
	OPER=NO	
	PROFDEF=YES	ID=1
	FIRST=ANY	
GDSNTB	POSIT=530	OTHER=ANY
	RACLIST=DISALLOWED	MAXLNTH=100
	GENLIST=DISALLOWED	DFTRETC=4
	RACLREQ=NO	DFTUACC=NONE
		SLBLREQ=NO
	MEMBER=MDSNTB	
	OPER=NO	
	PROFDEF=YES	ID=1
	FIRST=ANY	
GDSNTS	POSIT=529	OTHER=ANY
	RACLIST=DISALLOWED	MAXLNTH=100
	GENLIST=DISALLOWED	DFTRETC=4
	RACLREQ=NO	DFTUACC=NONE
		SLBLREQ=NO
	MEMBER=MDSNTS	
	OPER=NO	
	PROFDEF=YES	ID=1
	FIRST=ANY	

Table 23. Classes Supplied by IBM (continued)

Class		
GDSNUF	POSIT=560	OTHER=ANY
	RACLIST=DISALLOWED	MAXLNTH=100
	GENLIST=DISALLOWED	DFTRETC=4
	RACLREQ=NO	DFTUACC=NONE
		SLBLREQ=NO
	MEMBER=MDSNUF	
	OPER=NO	
	PROFDEF=YES	ID=1
	FIRST=ANY	
GDSNUT	POSIT=559	OTHER=ANY
	RACLIST=DISALLOWED	MAXLNTH=100
	GENLIST=DISALLOWED	DFTRETC=4
	RACLREQ=NO	DFTUACC=NONE
		SLBLREQ=NO
	MEMBER=MDSNUT	
	OPER=NO	
	PROFDEF=YES	ID=1
	FIRST=ANY	
GEJBROLE	POSIT=568	OTHER=ANY
	RACLIST=DISALLOWED	MAXLNTH=246
	GENLIST=DISALLOWED	DFTRETC=4
	RACLREQ=NO	DFTUACC=NONE
		SLBLREQ=NO
	MEMBER=EJBROLE	
	OPER=NO	
	PROFDEF=YES	ID=1
	FIRST=ANY	CASE=ASIS
GIMS	POSIT=4	OTHER=ALPHANUM
		MAXLNTH=8
		DFTUACC=NONE
	MEMBER=TIMS	
	OPER=NO	
		ID=10
	FIRST=ALPHA	
GINFOMAN	POSIT=85	OTHER=ANY
	RACLIST=DISALLOWED	MAXLNTH=44
	GENLIST=DISALLOWED	
	MEMBER=INFOMAN	
	OPER=NO	
		ID=104
	FIRST=ANY	

Table 23. Classes Supplied by IBM (continued)

Class		
GLOBAL	POSIT=6	OTHER=ANY
		MAXLNTH=8
		DFTUACC=NONE
	MEMBER=GMBR	
	OPER=NO	
		ID=17
	FIRST=ANY	
GMBR	POSIT=6	OTHER=ANY
		MAXLNTH=39
		DFTUACC=NONE
	GROUP=GLOBAL	
	OPER=NO	
		ID=16
	FIRST=ANY	
GMQADMIN	POSIT=80	OTHER=ANY
		MAXLNTH=62
		DFTRETC=8
		DFTUACC=NONE
	MEMBER=MQADMIN	
	OPER=NO	
		ID=121
	FIRST=ANY	
GMQCHAN	POSIT=58	OTHER=ANY
		MAXLNTH=53
		DFTRETC=8
		DFTUACC=NONE
	MEMBER=MQCHAN	
	OPER=NO	
		ID=1
	FIRST=ANY	
GMQNLIST	POSIT=79	OTHER=ANY
		MAXLNTH=53
		DFTRETC=8
		DFTUACC=NONE
	MEMBER=MQNLIST	
	OPER=NO	
		ID=119
	FIRST=ANY	

Table 23. Classes Supplied by IBM (continued)

Class		
GMQPROC	POSIT=78	OTHER=ANY
		MAXLNTH=53
		DFTRETC=8
		DFTUACC=NONE
	MEMBER=MQPROC	
	OPER=NO	
		ID=117
	FIRST=ANY	
GMQQUEUE	POSIT=77	OTHER=ANY
		MAXLNTH=53
		DFTRETC=8
		DFTUACC=NONE
	MEMBER=MQQUEUE	
	OPER=NO	
		ID=4
	FIRST=ANY	
GSDSF	POSIT=100	OTHER=ANY
		MAXLNTH=63
		DFTUACC=NONE
	MEMBER=SDSF	
	OPER=NO	
		ID=95
	FIRST=ANY	
GSOMDOBJ	POSIT=547	OTHER=ANY
		MAXLNTH=246
		DFTRETC=8
	MEMBER=SOMDOBJS	
	OPER=NO	
		ID=1
	FIRST=ALPHA	
GTERMINL	POSIT=2	OTHER=ALPHANUM
		MAXLNTH=8
	MEMBER=TERMINAL	
	OPER=NO	
		ID=42
	FIRST=ALPHANUM	

Table 23. Classes Supplied by IBM (continued)

Class		
HCICSFCT	POSIT=5	OTHER=ANY
		MAXLNTH=17
		DFTUACC=NONE
	MEMBER=FCICSFCT	
	OPER=NO	
		ID=28
	FIRST=ANY	
HIMS	POSIT=101	OTHER=ALPHANUM
	RACLIST=DISALLOWED	MAXLNTH=8
	GENLIST=DISALLOWED	
		DFTUACC=NONE
	MEMBER=FIMS	
	OPER=NO	
		ID=80
	FIRST=ALPHANUM	
IBMOPC	POSIT=60	OTHER=ANY
		MAXLNTH=60
		DFTUACC=NONE
	OPER=NO	
		ID=1
	FIRST=ALPHA	
ILMADMIN	POSIT=566	OTHER=ANY
	RACLIST=ALLOWED	MAXLNTH=246
	GENLIST=ALLOWED	
		DFTUACC=NONE
		SLBLREQ=NONE
	OPER=NO	
		ID=1
	FIRST=ANY	
INFOMAN	POSIT=85	OTHER=ANY
	RACLIST=ALLOWED	MAXLNTH=44
	GENLIST=ALLOWED	
	GROUP=GINFOMAN	
	OPER=NO	
		ID=103
	FIRST=ANY	

Table 23. Classes Supplied by IBM (continued)

Class		
IPCOBJ	POSIT=62	OTHER=ANY
	RACLIST=DISALLOWED	MAXLNTH=246
	GENLIST=DISALLOWED	DFTRETC=8
		DFTUACC=NONE
	OPER=NO	
	PROFDEF=NO;	ID=1
	FIRST=ANY	
JAVA	POSIT=556	OTHER=ANY
	RACLIST=ALLOWED	MAXLNTH=246
		DFTRETC=4
	RACLREQ=NO	DFTUACC=NONE
	OPER=NO	
		ID=1
	FIRST=ANY	
JCICSJCT	POSIT=5	OTHER=ANY
		MAXLNTH=17
		DFTUACC=NONE
	GROUP=KCICSJCT	
	OPER=NO	
		ID=29
	FIRST=ANY	
JESINPUT	POSIT=108	OTHER=ANY
	RACLIST=ALLOWED	MAXLNTH=8
	GENLIST=DISALLOWED	DFTRETC=8
		DFTUACC=NONE
	OPER=NO	
		ID=67
	FIRST=ANY	
JESJOBS	POSIT=109	OTHER=ANY
	RACLIST=ALLOWED	MAXLNTH=39
	GENLIST=ALLOWED	DFTRETC=8
		DFTUACC=NONE
	OPER=NO	
		ID=66
	FIRST=ANY	

Table 23. Classes Supplied by IBM (continued)

Class		
JESSPOOL	POSIT=110	OTHER=ANY
	RACLIST=ALLOWED	MAXLNTH=53
	GENLIST=DISALLOWED	DFTRETC=8
		DFTUACC=NONE
	OPER=NO	
		ID=65
	FIRST=ANY	
KCICSJCT	POSIT=5	OTHER=ANY
		MAXLNTH=17
		DFTUACC=NONE
	MEMBER=JCICSJCT	
	OPER=NO	
		ID=30
	FIRST=ANY	
KERBLINK	POSIT=565	OTHER=ANY
		MAXLNTH=240
	GENLIST=DISALLOWED	
		DFTUACC=NONE
	RACLIST=DISALLOWED	
		DFTRETC=4
	OPER=NO	
		ID=1
	FIRST=ANY	
KEYSMSTR	POSIT=543	OTHER=ANY
	RACLIST=ALLOWED	MAXLNTH=39
	GENLIST=ALLOWED	DFTRETC=8
		DFTUACC=NONE
	OPER=NO	
		ID=1
	FIRST=ALPHANUM	
LDAPBIND	POSIT=571	OTHER=ANY
	RACLIST=ALLOWED	MAXLNTH=246
	GENLIST=DISALLOWED	
		DFTUACC=NONE
	OPER=NO	
		ID=1
	FIRST=ANY	

Table 23. Classes Supplied by IBM (continued)

Class		
LFSCLASS	POSIT=12	OTHER=ANY
	RACLIST=ALLOWED	MAXLNTH=246
		DFTUACC=NONE
	OPER=NO	
		ID=1
	FIRST=ALPHANUM	
LOGSTRM	POSIT=61	OTHER=ANY
	RACLIST=ALLOWED	MAXLNTH=26
	GENLIST=ALLOWED	
		DFTUACC=NONE
	OPER=NO	
		ID=1
	FIRST=ANY	
MCICSPPT	POSIT=5	OTHER=ANY
		MAXLNTH=17
		DFTUACC=NONE
	GROUP=NCICSPPT	
	OPER=NO	
		ID=35
	FIRST=ANY	
MDSNBP	POSIT=536	OTHER=ANY
	RACLIST=DISALLOWED	MAXLNTH=100
	GENLIST=DISALLOWED	DFTRETC=4
	RACLREQ=NO	DFTUACC=NONE
	GROUP=GDSNBP	SLBLREQ=NO
	OPER=NO	
	PROFDEF=YES	ID=1
	FIRST=ANY	
MDSNCL	POSIT=538	OTHER=ANY
	RACLIST=DISALLOWED	MAXLNTH=100
	GENLIST=DISALLOWED	DFTRETC=4
	RACLREQ=NO	DFTUACC=NONE
	GROUP=GDSNCL	SLBLREQ=NO
	OPER=NO	
	PROFDEF=YES	ID=1
	FIRST=ANY	

Table 23. Classes Supplied by IBM (continued)

Class		
MDSNDB	POSIT=528	OTHER=ANY
	RACLIST=DISALLOWED	MAXLNTH=100
	GENLIST=DISALLOWED	DFTRETC=4
	RACLREQ=NO	DFTUACC=NONE
	GROUP=GDSNDB	SLBLREQ=NO
	OPER=NO	
	PROFDEF=YES	ID=1
	FIRST=ANY	
MDSNJR	POSIT=567	OTHER=ANY
	RACLIST=DISALLOWED	MAXLNTH=100
	GENLIST=DISALLOWED	DFTRETC=4
	RACLREQ=NO	DFTUACC=NONE
	GROUP=GDSNJR	SLBLREQ=NO
	OPER=NO	
	PROFDEF=YES	ID=1
	FIRST=ANY	
MDSNPK	POSIT=534	OTHER=ANY
	RACLIST=DISALLOWED	MAXLNTH=100
	GENLIST=DISALLOWED	DFTRETC=4
	RACLREQ=NO	DFTUACC=NONE
	GROUP=GDSNPK	SLBLREQ=NO
	OPER=NO	
	PROFDEF=YES	ID=1
	FIRST=ANY	
MDSNPN	POSIT=533	OTHER=ANY
	RACLIST=DISALLOWED	MAXLNTH=100
	GENLIST=DISALLOWED	DFTRETC=4
	RACLREQ=NO	DFTUACC=NONE
	GROUP=GDSNPN	SLBLREQ=NO
	OPER=NO	
	PROFDEF=YES	ID=1
	FIRST=ANY	
MDSNSC	POSIT=562	OTHER=ANY
	RACLIST=DISALLOWED	MAXLNTH=100
	GENLIST=DISALLOWED	DFTRETC=4
	RACLREQ=NO	DFTUACC=NONE
	GROUP=GDSNSC	SLBLREQ=NO
	OPER=NO	
	PROFDEF=YES	ID=1
	FIRST=ANY	

Table 23. Classes Supplied by IBM (continued)

Class		
MDSNSG	POSIT=537	OTHER=ANY
	RACLIST=DISALLOWED	MAXLNTH=100
	GENLIST=DISALLOWED	DFTRETC=4
	RACLREQ=NO	DFTUACC=NONE
	GROUP=GDSNSG	SLBLREQ=NO
	OPER=NO	
	PROFDEF=YES	ID=1
	FIRST=ANY	
MDSNSM	POSIT=535	OTHER=ANY
	RACLIST=DISALLOWED	MAXLNTH=100
	GENLIST=DISALLOWED	DFTRETC=4
	RACLREQ=NO	DFTUACC=NONE
	GROUP=GDSNSM	SLBLREQ=NO
	OPER=NO	
	PROFDEF=YES	ID=1
	FIRST=ANY	
MDSNSP	POSIT=561	OTHER=ANY
	RACLIST=DISALLOWED	MAXLNTH=100
	GENLIST=DISALLOWED	DFTRETC=4
	RACLREQ=NO	DFTUACC=NONE
	GROUP=GDSNSP	SLBLREQ=NO
	OPER=NO	
	PROFDEF=YES	ID=1
	FIRST=ANY	
MDSNTB	POSIT=530	OTHER=ANY
	RACLIST=DISALLOWED	MAXLNTH=100
	GENLIST=DISALLOWED	DFTRETC=4
	RACLREQ=NO	DFTUACC=NONE
	GROUP=GDSNTB	SLBLREQ=NO
	OPER=NO	
	PROFDEF=YES	ID=1
	FIRST=ANY	
MDSNTS	POSIT=529	OTHER=ANY
	RACLIST=DISALLOWED	MAXLNTH=100
	GENLIST=DISALLOWED	DFTRETC=4
	RACLREQ=NO	DFTUACC=NONE
	GROUP=GDSNTS	SLBLREQ=NO
	OPER=NO	
	PROFDEF=YES	ID=1
	FIRST=ANY	

Table 23. Classes Supplied by IBM (continued)

Class		
MDSNUF	POSIT=560	OTHER=ANY
	RACLIST=DISALLOWED	MAXLNTH=100
	GENLIST=DISALLOWED	DFTRETC=4
	RACLREQ=NO	DFTUACC=NONE
	GROUP=GDSNUF	SLBLREQ=NO
	OPER=NO	
	PROFDEF=YES	ID=1
	FIRST=ANY	
MDSNUT	POSIT=559	OTHER=ANY
	RACLIST=DISALLOWED	MAXLNTH=100
	GENLIST=DISALLOWED	DFTRETC=4
	RACLREQ=NO	DFTUACC=NONE
	GROUP=GDSNUT	SLBLREQ=NO
	OPER=NO	
	PROFDEF=YES	ID=1
	FIRST=ANY	
MGMTCLAS	POSIT=123	OTHER=ALPHANUM
	RACLIST=ALLOWED	MAXLNTH=8
	GENLIST=DISALLOWED	
		DFTUACC=NONE
	OPER=NO	
		ID=49
	FIRST=ALPHA	
MQADMIN	POSIT=80	OTHER=ANY
		MAXLNTH=62
		DFTRETC=8
		DFTUACC=NONE
	GROUP=GMQADMIN	
	OPER=NO	
		ID=120
	FIRST=ANY	
MQCHAN	POSIT=58	OTHER=ANY
		MAXLNTH=53
		DFTRETC=8
		DFTUACC=NONE
	GROUP=GMQCHAN	
	OPER=NO	
		ID=1
	FIRST=ANY	

Table 23. Classes Supplied by IBM (continued)

Class		
MQCMDS	POSIT=81	OTHER=ANY
	RACLIST=ALLOWED	MAXLNTH=22
		DFTRETC=8
		DFTUACC=NONE
	OPER=NO	
		ID=122
	FIRST=ANY	
MQCONN	POSIT=82	OTHER=ANY
	RACLIST=ALLOWED	MAXLNTH=10
		DFTRETC=8
		DFTUACC=NONE
	OPER=NO	
		ID=123
	FIRST=ANY	
MQNLIST	POSIT=79	OTHER=ANY
		MAXLNTH=53
		DFTRETC=8
		DFTUACC=NONE
	GROUP=GMQNLIST	
	OPER=NO	
		ID=118
	FIRST=ANY	
MQPROC	POSIT=78	OTHER=ANY
		MAXLNTH=53
		DFTRETC=8
		DFTUACC=NONE
	GROUP=GMQPROC	
	OPER=NO	
		ID=116
	FIRST=ANY	
MQQUEUE	POSIT=77	OTHER=ANY
		MAXLNTH=53
		DFTRETC=8
		DFTUACC=NONE
	GROUP=GMQQUEUE	
	OPER=NO	
		ID=2
	FIRST=ANY	

Table 23. Classes Supplied by IBM (continued)

Class		
NCICSPPT	POSIT=5	OTHER=ANY
		MAXLNTH=17
		DFTUACC=NONE
	MEMBER=MCICSPPT	
	OPER=NO	
		ID=36
	FIRST=ANY	
NDSLINK	POSIT=554	OTHER=ANY
	RACLIST=DISALLOWED	MAXLNTH=246
	GENLIST=DISALLOWED	
		DFTUACC=NONE
	OPER=NO	PROFDEF=YES
	DFTRETC=4	ID=1
	FIRST=ANY	
NETCMDS	POSIT=68	OTHER=ANY
	RACLIST=ALLOWED	MAXLNTH=246
		ID=1
	FIRST=ALPHA	
NETSPAN	POSIT=67	OTHER=ANY
		MAXLNTH=8
		ID=1
	FIRST=ALPHA	
NODES	POSIT=103	OTHER=ANY
	RACLIST=ALLOWED	MAXLNTH=24
	GENLIST=DISALLOWED	
	RACLREQ=YES	DFTUACC=NONE
	MEMBER=NODMBR	
	OPER=NO	
		ID=72
	FIRST=ANY	

Table 23. Classes Supplied by IBM (continued)

Class		
NODMBR	POSIT=103	OTHER=ANY
	RACLIST=DISALLOWED	MAXLNTH=8
	GENLIST=DISALLOWED	
		DFTUACC=NONE
	GROUP=NODES	
	OPER=NO	
		ID=43
	FIRST=ANY	
NOTELINK	POSIT=553	OTHER=ANY
	RACLIST=DISALLOWED	MAXLNTH=64
	GENLIST=DISALLOWED	
		DFTUACC=NONE
	OPER=NO	PROFDEF=YES
	DFTRETC=4	ID=1
	FIRST=ANY	
NVASAPDT	POSIT=97	OTHER=ANY
	RACLIST=DISALLOWED	MAXLNTH=17
	GENLIST=DISALLOWED	
		DFTUACC=NONE
	OPER=NO	
		ID=83
	FIRST=ANY	
OIMS	POSIT=101	OTHER=ALPHANUM
	RACLIST=DISALLOWED	MAXLNTH=8
	GENLIST=DISALLOWED	
		DFTUACC=NONE
	GROUP=WIMS	
	OPER=NO	
		ID=81
	FIRST=ALPHANUM	
OPERCMDS	POSIT=112	OTHER=ANY
	RACLIST=ALLOWED	MAXLNTH=39
	GENLIST=DISALLOWED	
	RACLREQ=YES	DFTUACC=NONE
	OPER=NO	
		ID=63
	FIRST=ANY	

Table 23. Classes Supplied by IBM (continued)

Class		
PCICSPSB	POSIT=5	OTHER=ANY
		MAXLNTH=17
		DFTUACC=NONE
	GROUP=QCICSPSB	
	OPER=NO	
		ID=14
	FIRST=ANY	
PERFGRP	POSIT=125	OTHER=NUMERIC
	RACLIST=ALLOWED	MAXLNTH=3
	GENLIST=DISALLOWED	
		DFTUACC=NONE
	OPER=NO	
		ID=47
	FIRST=NUMERIC	
PIMS	POSIT=101	OTHER=ALPHANUM
	RACLIST=DISALLOWED	MAXLNTH=8
	GENLIST=DISALLOWED	
		DFTUACC=NONE
	GROUP=QIMS	
	OPER=NO	
		ID=75
	FIRST=ALPHANUM	
PMBR	POSIT=13	OTHER=ALPHANUM
		MAXLNTH=44
		DFTUACC=NONE
	GROUP=PROGRAM	
	OPER=NO	
		ID=40
	FIRST=ALPHA	
PRINTSRV	POSIT=570	OTHER=ANY
	RACLIST=ALLOWED	MAXLNTH=17
	GENLIST=ALLOWED	
		DFTUACC=NONE
	OPER=NO	
		ID=1
	FIRST=ANY	

Table 23. Classes Supplied by IBM (continued)

Class		
PROCACT	POSIT=75	OTHER=ANY
	RACLIST=DISALLOWED	MAXLNTH=246
	GENLIST=DISALLOWED	DFTRETC=8
		DFTUACC=NONE
	OPER=NO	
	PROFDEF=NO	ID=111
	FIRST=ANY	
PROCESS	POSIT=74	OTHER=ANY
	RACLIST=DISALLOWED	MAXLNTH=246
	GENLIST=DISALLOWED	DFTRETC=8
		DFTUACC=NONE
	OPER=NO	
	PROFDEF=NO	ID=110
	FIRST=ANY	
PROGRAM	POSIT=13	OTHER=ALPHANUM
		MAXLNTH=8
		DFTUACC=NONE
	MEMBER=PMBR	
	OPER=NO	
		ID=41
	FIRST=ALPHA	
PROPCNTL	POSIT=119	OTHER=ALPHANUM
	RACLIST=ALLOWED	MAXLNTH=8
	GENLIST=DISALLOWED	
	RACLREQ=YES	DFTUACC=NONE
	OPER=NO	
		ID=56
	FIRST=ALPHANUM	
PSFMPL	POSIT=113	OTHER=ANY
	RACLIST=ALLOWED	MAXLNTH=39
	GENLIST=DISALLOWED	DFTRETC=8
	RACLREQ=YES	DFTUACC=NONE
	OPER=YES	
		ID=62
	FIRST=ANY	

Table 23. Classes Supplied by IBM (continued)

Class		
PTKTDATA	POSIT=76	OTHER=ANY
	RACLIST=ALLOWED	MAXLNTH=39
	RACLREQ=YES	DFTUACC=NONE
	OPER=NO	
		ID=112
	FIRST=ALPHANUM	
PTKTVAL	POSIT=76	OTHER=ANY
	RACLIST=ALLOWED	MAXLNTH=39
	OPER=NO	
		ID=1
	FIRST=ANY	
QCICSPSB	POSIT=5	OTHER=ANY
		MAXLNTH=17
		DFTUACC=NONE
	MEMBER=PCICSPSB	
	OPER=NO	
		ID=15
	FIRST=ANY	
QIMS	POSIT=101	OTHER=ALPHANUM
	RACLIST=DISALLOWED	MAXLNTH=8
	GENLIST=DISALLOWED	
		DFTUACC=NONE
	MEMBER=PIMS	
	OPER=NO	
		ID=76
	FIRST=ALPHANUM	
RACGLIST	POSIT=10	OTHER=ANY
	RACLIST=DISALLOWED	MAXLNTH=14
	GENLIST=DISALLOWED	DFTRETC=4
	RACLREQ=NO	DFTUACC=NONE
		SLBLREQ=NO
	OPER=NO	
	PROFDEF=YES	ID=1
	FIRST=ANY	

Table 23. Classes Supplied by IBM (continued)

Class		
RACFVARS	POSIT=102	OTHER=ALPHANUM
	RACLIST=ALLOWED	MAXLNTH=8
	GENLIST=DISALLOWED	DFTRETC=4
	RACLREQ=YES	DFTUACC=NONE
	MEMBER=RVARSMBR	
	OPER=NO	
		ID=74
	FIRST=ANY	
REALM	POSIT=564	OTHER=ANY
		MAXLNTH=240
	GENLIST=DISALLOWED	
		DFTUACC=NONE
	RACLIST=ALLOWED	
		DFTRETC=4
	OPER=NO	
		ID=1
	FIRST=ANY	
RMTOPS	POSIT=86	OTHER=ANY
		MAXLNTH=246
		DFTUACC=NONE
	OPER=NO	
		ID=102
	FIRST=ALPHA	
RODMMGR	POSIT=69	OTHER=ANY
		MAXLNTH=8
		ID=113
	FIRST=ALPHANUM	
ROLE	POSIT=551	OTHER=ANY
	RACLIST=DISALLOWED	MAXLNTH=246
	GENLIST=DISALLOWED	DFTRETC=8
	PROFDEF=YES	DFTUACC=NONE
	OPER=NO	
		ID=1
	FIRST=ANY	

Table 23. Classes Supplied by IBM (continued)

Class		
RRSFDATA	POSIT=65	OTHER=ANY
	RACLIST=ALLOWED	MAXLNTH=246
	GENLIST=ALLOWED	DFTRETC=4
	RACLREQ=NO	DFTUACC=NONE
	OPER=NO	KEYQUAL=0
		ID=1
	FIRST=ANY	
RVARSMBR	POSIT=102	OTHER=ANY
	RACLIST=DISALLOWED	MAXLNTH=39
	GENLIST=DISALLOWED	
		DFTUACC=NONE
	GROUP=RACFVARS	
	OPER=NO	
		ID=73
	FIRST=ANY	
SCDMBR	POSIT=9	OTHER=ANY
		MAXLNTH=39
		DFTUACC=NONE
	GROUP=SECDATA	
	OPER=NO	
		ID=25
	FIRST=ANY	
SCICSTST	POSIT=5	OTHER=ANY
		MAXLNTH=17
		DFTUACC=NONE
	GROUP=UCICSTST	
	OPER=NO	
		ID=33
	FIRST=ANY	MAXLENX=25
SDSF	POSIT=100	OTHER=ANY
	RACLIST=ALLOWED	MAXLNTH=63
	GENLIST=ALLOWED	
		DFTUACC=NONE
	GROUP=GSDSF	
	OPER=NO	
		ID=94
	FIRST=ANY	

Table 23. Classes Supplied by IBM (continued)

Class		
SECDATA	POSIT=9	OTHER=ALPHA
		MAXLNTH=8
		DFTUACC=NONE
	MEMBER=SCDMBR	
	OPER=NO	
		ID=26
	FIRST=ALPHA	
SECLABEL	POSIT=117	OTHER=ALPHANUM
	RACLIST=ALLOWED	MAXLNTH=8
	GENLIST=DISALLOWED	DFTRETC=8
	RACLREQ=YES	DFTUACC=NONE
	OPER=NO	
		ID=58
	FIRST=ALPHA	
SERVAUTH	POSIT=558	OTHER=ANY
	RACLIST=ALLOWED	MAXLNTH=64
		DFTRETC=4
	RACLREQ=YES	DFTUACC=NONE
	OPER=NO	
		ID=1
	FIRST=ALPHA	
SFSCMD	POSIT=99	OTHER=ANY
	RACLIST=DISALLOWED	MAXLNTH=246
	GENLIST=DISALLOWED	DFTRETC=8
		DFTUACC=NONE
	OPER=NO	
		ID=93
	FIRST=ANY	
SERVER	POSIT=546	OTHER=ANY
	RACLIST=ALLOWED	MAXLNTH=41
		DFTRETC=8
	OPER=NO	
		ID=1
	FIRST=ALPHANUM	

Table 23. Classes Supplied by IBM (continued)

Class		
SIMS	POSIT=101	OTHER=ALPHANUM
	RACLIST=DISALLOWED	MAXLNTH=8
	GENLIST=DISALLOWED	
		DFTUACC=NONE
	GROUP=UIMS	
	OPER=NO	
		ID=77
	FIRST=ALPHANUM	
SMESSAGE	POSIT=116	OTHER=ALPHANUM
	RACLIST=ALLOWED	MAXLNTH=8
	GENLIST=DISALLOWED	DFTRETC=0
		DFTUACC=NONE
	OPER=NO	
		ID=59
	FIRST=ALPHANUM	
SOMDOBJS	POSIT=547	OTHER=ANY
	RACLIST=ALLOWED	MAXLNTH=246
		DFTRETC=8
	GROUP=GSOMDOBJ	
	OPER=NO	
		ID=1
	FIRST=ALPHANUM	
STARTED	POSIT=66	OTHER=ANY
	RACLIST=ALLOWED	MAXLNTH=17
	GENLIST=DISALLOWED	
	RACLREQ=YES	DFTUACC=NONE
	OPER=NO	
		ID=1
	FIRST=ALPHA	
STORCLAS	POSIT=122	OTHER=ALPHANUM
	RACLIST=ALLOWED	MAXLNTH=8
	GENLIST=DISALLOWED	
		DFTUACC=NONE
	OPER=NO	
		ID=50
	FIRST=ALPHA	

Table 23. Classes Supplied by IBM (continued)

Class		
SUBSYSNM	POSIT=83	OTHER=ALPHANUM
	RACLIST=ALLOWED	MAXLNTH=8
		DFTUACC=NONE
	OPER=NO	
		ID=1
	FIRST=ALPHA	
SURROGAT	POSIT=104	OTHER=ANY
	RACLIST=ALLOWED	MAXLNTH=17
	GENLIST=DISALLOWED	
		DFTUACC=NONE
	OPER=NO	
		ID=71
	FIRST=ANY	
SYSMVIEW	POSIT=542	OTHER=ANY
	RACLIST=ALLOWED	MAXLNTH=52
	GENLIST=DISALLOWED	
	RACLREQ=YES	DFTUACC=NONE
	OPER=NO	
		ID=1
	FIRST=ALPHANUM	
TAPEVOL	POSIT=1	OTHER=ALPHANUM
		MAXLNTH=6
		SLBLREQ=YES
	OPER=YES	
		ID=6
	FIRST=ALPHANUM	
TCICSTRN	POSIT=5	OTHER=ANY
		MAXLNTH=13
		DFTUACC=NONE
	GROUP=GCICSTRN	
	OPER=NO	
		ID=12
	FIRST=ANY	

Table 23. Classes Supplied by IBM (continued)

Class		
TEMPDSN	POSIT=106	OTHER=ANY
	RACLIST=DISALLOWED	MAXLNTH=39
	GENLIST=DISALLOWED	DFTRETC=8
		DFTUACC=NONE
	OPER=NO	
	PROFDEF=NO	ID=69
	FIRST=ANY	
TERMINAL	POSIT=2	OTHER=ALPHANUM
	RACLIST=ALLOWED	MAXLNTH=8
	GENLIST=ALLOWED	
	GROUP=GTERMINL	SLBLREQ=YES
		RVRSMAC=YES
	OPER=NO	
		ID=7
	FIRST=ALPHANUM	
TIMS	POSIT=4	OTHER=ALPHANUM
		MAXLNTH=8
		DFTUACC=NONE
	GROUP=GIMS	
	OPER=NO	
		ID=9
	FIRST=ALPHANUM	
TMEADMIN	POSIT=549	OTHER=ANY
	RACLIST=ALLOWED	MAXLNTH=246
	GENLIST=ALLOWED	DFTRETC=8
		DFTUACC=NONE
	OPER=NO	
		ID=1
	FIRST=ALPHANUM	
TSOAUTH	POSIT=124	OTHER=ALPHANUM
	RACLIST=ALLOWED	MAXLNTH=8
	GENLIST=DISALLOWED	
		DFTUACC=NONE
	OPER=NO	
		ID=48
	FIRST=ALPHANUM	

Table 23. Classes Supplied by IBM (continued)

Class		
TSOPROC	POSIT=127	OTHER=ALPHANUM
	RACLIST=ALLOWED	MAXLNTH=8
	GENLIST=DISALLOWED	
		DFTUACC=NONE
	OPER=NO	
		ID=45
	FIRST=ALPHA	
UCICSTST	POSIT=5	OTHER=ANY
		MAXLNTH=17
		DFTUACC=NONE
	MEMBER=SCICSTST	
	OPER=NO	
		ID=34
	FIRST=ANY	MAXLENX=25
UIMS	POSIT=101	OTHER=ALPHANUM
	RACLIST=DISALLOWED	MAXLNTH=8
	GENLIST=DISALLOWED	
		DFTUACC=NONE
	MEMBER=SIMS	
	OPER=NO	
		ID=78
	FIRST=ALPHANUM	
UNIXMAP	POSIT=552	OTHER=NUMERIC
	RACLIST=DISALLOWED	MAXLNTH=246
	GENLIST=DISALLOWED	DFTRETC=4
		DFTUACC=NONE
	OPER=NO	
		ID=1
	FIRST=ALPHA	
UNIXPRIV	POSIT=555	OTHER=ANY
	RACLIST=ALLOWED	MAXLNTH=246
	GENLIST=DISALLOWED	DFTRETC=4
		DFTUACC=NONE
	RACLREQ=YES	SLBLREQ=NO
	OPER=NO	
		ID=1
	FIRST=ANY	

Table 23. Classes Supplied by IBM (continued)

Class		
VCICSCMD	POSIT=5	OTHER=ANY
		MAXLNTH=21
		DFTUACC=NONE
	MEMBER=CCICSCMD	
	OPER=NO	
		ID=53
	FIRST=ANY	
VMBATCH	POSIT=15	OTHER=ANY
	RACLIST=ALLOWED	MAXLNTH=8
	GENLIST=ALLOWED	DFTRETC=4
		DFTUACC=NONE
		ID=24
	FIRST=ANY	
VMBR	POSIT=120	OTHER=ALPHANUM
	RACLIST=DISALLOWED	MAXLNTH=39
	GENLIST=DISALLOWED	
		DFTUACC=NONE
	GROUP=VMEVENT	
	OPER=NO	
		ID=54
	FIRST=ALPHA	
VMCMD	POSIT=14	OTHER=ANY
	RACLIST=ALLOWED	MAXLNTH=17
	GENLIST=ALLOWED	DFTRETC=4
		DFTUACC=NONE
		ID=22
	FIRST=ANY	
VMEVENT	POSIT=120	OTHER=ANY
	RACLIST=DISALLOWED	MAXLNTH=16
	GENLIST=DISALLOWED	
		DFTUACC=NONE
	MEMBER=VMBR	
	OPER=NO	
		ID=55
	FIRST=ALPHA	

Table 23. Classes Supplied by IBM (continued)

Class		
VMMAC	POSIT=91	OTHER=ANY
	RACLIST=DISALLOWED	MAXLNTH=246
	GENLIST=DISALLOWED	DFTRETC=8
		DFTUACC=NONE
		SLBLREQ=YES
	OPER=NO	
	PROFDEF=NO	ID=91
	FIRST=ANY	
VMMDISK	POSIT=18	OTHER=ANY
	RACLIST=DISALLOWED	MAXLNTH=22
	GENLIST=ALLOWED	
		DFTUACC=NONE
		ID=20
	FIRST=ANY	
VMNODE	POSIT=16	OTHER=ANY
	RACLIST=ALLOWED	MAXLNTH=8
	GENLIST=ALLOWED	
		DFTUACC=NONE
		ID=23
	FIRST=ANY	
VMPOSIX	POSIT=63	OTHER=ANY
	RACLIST=DISALLOWED	MAXLNTH=246
	GENLIST=DISALLOWED	DFTRETC=4
		DFTUACC=NONE
	OPER=NO	
		ID=1
	FIRST=ANY	
VMRDR	POSIT=17	OTHER=ANY
	RACLIST=DISALLOWED	MAXLNTH=17
	GENLIST=ALLOWED	DFTRETC=4
		DFTUACC=NONE
		ID=21
	FIRST=ANY	

Table 23. Classes Supplied by IBM (continued)

Class		
VMSEGMT	POSIT=90	OTHER=ANY
	RACLIST=ALLOWED	MAXLNTH=246
	GENLIST=ALLOWED	DFTRETC=4
		DFTUACC=NONE
		SLBLREQ=YES
	OPER=NO	
		ID=92
	FIRST=ANY	
VMXEVENT	POSIT=96	OTHER=ANY
	RACLIST=DISALLOWED	MAXLNTH=16
	GENLIST=DISALLOWED	
		DFTUACC=NONE
	MEMBER=VXMBR	
	OPER=NO	
		ID=85
	FIRST=ALPHA	
VTAMAPPL	POSIT=114	OTHER=ALPHANUM
	RACLIST=ALLOWED	MAXLNTH=8
	GENLIST=DISALLOWED	
	RACLREQ=YES	DFTUACC=NONE
	OPER=NO	
		ID=61
	FIRST=ALPHANUM	
VXMBR	POSIT=96	OTHER=ALPHANUM
	RACLIST=DISALLOWED	MAXLNTH=39
	GENLIST=DISALLOWED	
		DFTUACC=NONE
	GROUP=VMXEVENT	
	OPER=NO	
		ID=84
	FIRST=ALPHA	
WIMS	POSIT=101	OTHER=ALPHANUM
	RACLIST=DISALLOWED	MAXLNTH=8
	GENLIST=DISALLOWED	
		DFTUACC=NONE
	MEMBER=OIMS	
	OPER=NO	
		ID=82
	FIRST=ALPHANUM	

Table 23. Classes Supplied by IBM (continued)

Class		
WRITER	POSIT=111	OTHER=ANY
	RACLIST=ALLOWED	MAXLNTH=39
	GENLIST=DISALLOWED	DFTRETC=8
		DFTUACC=NONE
		SLBLREQ=YES
		RVRSMAC=YES
	OPER=NO	
		ID=64
	FIRST=ANY	

Appendix F. Requesting security services

The following is guidance information for application programmers requesting the services of the security product.

Application writers who need to use the services of a security product should try to write their programs in a way that is compatible with RACF. In turn, the developer of a security product other than RACF should provide function that is compatible with RACF. In this way, application programs should function with RACF or with some other external security product.

Since the functions of RACF are enhanced in new releases, an application might require a specific minimum level of RACF support in order to work correctly. If this is true, you should document this minimum level so that users of your application who have RACF installed know what level they need. Also, other security-product implementers then know what level of function they must provide to work correctly with your application. And users of other security products know what level they need to install to run your application.

Your application should use RACROUTE rather than the older macros RACHECK, RACDEF, RACLIST, RACXTRT, RACINIT, FRACHECK, and RACSTAT.

Some Programming Interfaces to the security product might not be supported by all RACF-compatible security products. For example, the ICHEINTY interface (described in *z/OS Security Server RACF Macros and Interfaces*) is a General-Use interface that is only supported by RACF. If you want your application to work for users of RACF and of other security products, you should not make use of interfaces that are RACF-specific. The RACF-specific General-Use interfaces in this documentation are:

- The ACEEFCGP pointer to the list-of-groups table in the ACEE control block.
- The RACROUTE REQUEST=EXTRACT,TYPE=EXTRACT or TYPE=REPLACE functions that specify FIELDS= with a segment name (specified or implied) of BASE. You should not assume that any security product except RACF supports the extraction or replacement of named field information in the base segment of a profile.

  The other security products, however, should support extraction or replacement of data in the other segments, such as DFP and TSO, if they are to be compatible with RACF. They should also support all the other functions of RACROUTE REQUEST=EXTRACT, for RACF compatibility.

As long as you avoid the RACF-specific interfaces, your program should work with any RACF-compatible security product. If you receive an SAF return code of 4 (in register 15) with a return code and reason code of 0 in SAFPRRET and SAFPRREA, that indicates that there is no security product, or the product does not support the request you are making. As an application designer, you are then free to make your own decision to continue with your processing, or to terminate processing.

© Copyright IBM Corp. 1994, 2002

Appendix G. Accessibility

Accessibility features help a user who has a physical disability, such as restricted mobility or limited vision, to use software products successfully. The major accessibility features in z/OS enable users to:

- Use assistive technologies such as screen-readers and screen magnifier software
- Operate specific or equivalent features using only the keyboard
- Customize display attributes such as color, contrast, and font size

Using assistive technologies

Assistive technology products, such as screen-readers, function with the user interfaces found in z/OS. Consult the assistive technology documentation for specific information when using it to access z/OS interfaces.

Keyboard navigation of the user interface

Users can access z/OS user interfaces using TSO/E or ISPF. Refer to *z/OS TSO/E Primer*, *z/OS TSO/E User's Guide*, and *z/OS ISPF User's Guide Volume I* for information about accessing TSO/E and ISPF interfaces. These guides describe how to use TSO/E and ISPF, including the use of keyboard shortcuts or function keys (PF keys). Each guide includes the default settings for the PF keys and explains how to modify their functions.

© Copyright IBM Corp. 1994, 2002

Notices

This information was developed for products and services offered in the USA. IBM may not offer the products, services, or features discussed in this document in other countries. Consult your local IBM representative for information on the products and services currently available in your area. Any reference to an IBM product, program, or service is not intended to state or imply that only that IBM product, program, or service may be used. Any functionally equivalent product, program, or service that does not infringe any IBM intellectual property right may be used instead. However, it is the user's responsibility to evaluate and verify the operation of any non-IBM product, program, or service.

IBM may have patents or pending patent applications covering subject matter described in this document. The furnishing of this document does not give you any license to these patents. You can send license inquiries, in writing, to:

IBM Director of Licensing
IBM Corporation
North Castle Drive
Armonk, NY 10504-1785
USA

For license inquiries regarding double-byte (DBCS) information, contact the IBM Intellectual Property Department in your country or send inquiries, in writing, to:

IBM World Trade Asia Corporation
Licensing
2-31 Roppongi 3-chome, Minato-ku
Tokyo 106, Japan

The following paragraph does not apply to the United Kingdom or any other country where such provisions are inconsistent with local law:
INTERNATIONAL BUSINESS MACHINES CORPORATION PROVIDES THIS PUBLICATION "AS IS" WITHOUT WARRANTY OF ANY KIND, EITHER EXPRESS OR IMPLIED, INCLUDING, BUT NOT LIMITED TO, THE IMPLIED WARRANTIES OF NON-INFRINGEMENT, MERCHANTABILITY OR FITNESS FOR A PARTICULAR PURPOSE. Some states do not allow disclaimer of express or implied warranties in certain transactions, therefore, this statement may not apply to you.

This information could include technical inaccuracies or typographical errors. Changes are periodically made to the information herein; these changes will be incorporated in new editions of the document. IBM may make improvements and/or changes in the product(s) and/or the program(s) described in this document at any time without notice.

Any references in this information to non-IBM Web sites are provided for convenience only and do not in any manner serve as an endorsement of those Web sites. The materials at those Web sites are not part of the materials for this IBM product and use of those Web sites is at your own risk.

IBM may use or distribute any of the information you supply in any way it believes appropriate without incurring any obligation to you.

Licensees of this program who wish to have information about it for the purpose of enabling: (i) the exchange of information between independently created programs

© Copyright IBM Corp. 1994, 2002

and other programs (including this one) and (ii) the mutual use of the information which has been exchanged, should contact:

IBM Corporation
Mail Station P300
2455 South Road
Poughkeepsie, NY 12601-5400
USA

Such information may be available, subject to appropriate terms and conditions, including in some cases, payment of a fee.

The licensed program described in this information and all licensed material available for it are provided by IBM under terms of the IBM Customer Agreement, IBM International Program License Agreement, or any equivalent agreement between us.

This information contains examples of data and reports used in daily business operations. To illustrate them as completely as possible, the examples include the names of individuals, companies, brands, and products. All of these names are fictitious and any similarity to the names and addresses used by an actual business enterprise is entirely coincidental.

COPYRIGHT LICENSE:

This information contains sample application programs in source language, which illustrates programming techniques on various operating platforms. You may copy, modify, and distribute these sample programs in any form without payment to IBM, for the purposes of developing, using, marketing or distributing application programs conforming to the application programming interface for the operating platform for which the sample programs are written. These examples have not been thoroughly tested under all conditions. IBM, therefore, cannot guarantee or imply reliability, serviceability, or function of these programs. You may copy, modify, and distribute these sample programs in any form without payment to IBM for the purposes of developing, using, marketing, or distributing application programs conforming to IBM's application programming interfaces.

If you are viewing this information softcopy, the photographs and color illustrations may not appear.

Programming interface information

This documents intended Programming Interfaces that allow the customer to write programs to obtain the services of an external security manager.

This also documents information that is NOT intended to be used as Programming Interfaces of an external security manager. This information is identified where it occurs, either by an introductory statement to a chapter or section or by the following marking:

NOT programming interface information

End of NOT programming interface information

This product contains code licensed from RSA Data Security Incorporated.

Trademarks

The following terms are trademarks of the IBM Corporation in the United States or other countries or both:

BookManager
CICS
CICS/ESA
eSeries
IBM
IBMLink
IMS
Library Reader
MVS
MVS/ESA
MVS/XA
OS/390
Parallel Sysplex
RACF
Redbooks
Resource Link
RMF
SecureWay
System/390
S/390
VTAM
VM/ESA
z/OS
z/OS.e
zSeries

Lotus and Lotus Notes are trademarks of Lotus Development Corporation in the United States, other countries, or both.

Java and all Java-based trademarks are trademarks of Sun Microsystems, Inc. in the United States, other countries, or both.

Tivoli, TME, and NetView are trademarks of International Business Machines Corporation or Tivoli Systems, Inc. in the United States, other countries, or both.

UNIX is a registered trademark of The Open Group in the United States and other countries.

Other company, product, or service names may be trademarks or service marks of others.

Index

A
abend
  JES abend 393
accessibility 443
ACEE data area
  changing 230, 314
  creating with RACROUTE REQUEST=VERIFY macro 211
administration
  classroom courses xiii

C
CDT (class descriptor table)
  classes supplied by IBM 401
classroom courses, RACF xiii
coding macros 4
combination field definitions
  definition 357
  format 357
connect template
  contents 372
continuation coding
  example 6
continuation lines 6
courses about RACF xiii

D
data set template
  contents 374
database profile
  storage requirements 357, 359
disability 443
documents, licensed xiv

E
ENVIR=VERIFY parameter
  on RACROUTE macro 389
ENVR data structure 166
ENVR object storage area 166
example
  of continuation coding 6
exit routine
  SAF router 389, 390
exits 387
external security product 395
  requirements 396
  return and reason codes 397

F
fields
  character 357
  date 356
fields *(continued)*
  integer 357
  time 357
FRACHECK macro 266
  chart of parameters by release 268
  description 266
  list form 269
  used to check a user's authorization to a resource 266
from RACROUTE REQUEST=STAT
  return codes 185

G
general resource
  fields in the profile 378
general template
  contents 378
group
  maximum number of users in 358
  template for database 359
group profile
  description of the fields 360
group template
  contents 360

I
ICHERCDE macro
  class descriptor table supplied by IBM 401
ICHRFR00 module
  receiving control from the SAF router 389
ICHRFR01 module
  and the SAF router 389
ICHRFX02 exit routine
  reason codes 144, 145, 268, 269
ICHRRCDX table 401
ICHRTX00 exit 389
ICHSAFP macro on MVS 391
installation exit
  ICHRTX00 387
  IRRSXT00 393
irrcerta, irrmulti, and irrsitec user IDs
  digital certificates 119
IRRSXT00 exit 393

J
JES (job entry subsystem)
  handling of the return codes from SAF 392
  possible abend because of a RACF abend 393

K
keyboard 443

© Copyright IBM Corp. 1994, 2002

L

licensed documents xiv
LookAt message retrieval tool xiii

M

macro forms
  what they mean 1
macros
  list of 7
  RACDEF macro 271
  RACHECK macro 293
  RACINIT macro 308
  RACLIST macro 320
  RACROUTE macro 8, 326
  RACROUTE REQUEST=AUDIT macro 23
  RACROUTE REQUEST=AUTH macro 30
  RACROUTE REQUEST=DEFINE macro 59
  RACROUTE REQUEST=DIRAUTH 93
  RACROUTE REQUEST=EXTRACT macro 99
  RACROUTE REQUEST=FASTAUTH macro 137
  RACROUTE REQUEST=LIST macro 149
  RACROUTE REQUEST=SIGNON macro 163
  RACROUTE REQUEST=STAT macro 182
  RACROUTE REQUEST=TOKENBLD macro 190
  RACROUTE REQUEST=TOKENMAP macro 201
  RACROUTE REQUEST=TOKENXTR macro 206
  RACROUTE REQUEST=VERIFY macro 211
  RACROUTE REQUEST=VERIFYX macro 243
  RACSTAT macro 334
  RACXTRT macro 337
  that invoke RACF 7
mapping macros
  ICHSGX1P 171
maximum number of users in group 358
message retrieval tool, LookAt xiii
MVS router
  See also ICHRTX00 exit
  See also SAF router
  installation exit 387
MVS router exit 387

P

parameter lists
  modifying with the SAF router exit routine 389
  SAF router exit 390
password
  how the SAF router exit routine can affect
    validation 392
postprocessing exit routine
  FRACHECK macro
    reason codes 268, 269
  RACROUTE REQUEST=FASTAUTH macro
    reason codes 144, 145
profile
  contents of a data set profile 374
  contents of a general resource profile 378
  contents of a group profile 360
  contents of a user profile 362
profile *(continued)*
  in database 356
  repeat groups 356
profile checking 52, 56, 306
publications
  on CD-ROM xii, xiii
  softcopy xii, xiii

R

RACDEF macro 271
  chart of parameters by release 283
  description 271
  example 286
  execute form 289
  list form 287
  return codes 284
  standard form 272
  syntax 272, 289
  used to define, modify, or delete resource
    profiles 271
RACF
  classroom courses xiii
  publications
    on CD-ROM xii, xiii
    softcopy xii, xiii
  system macros 7, 265
RACF administration
  classroom courses xiii
RACF database
  connect template 372
  general template 378
  group template 360
  reserved templates 384
  user template 362
RACF macros
  coding 4
  FRACHECK macro 266
  list of 265
  sample 4
  that invoke RACF 265
RACF security topics
  classroom courses xiii
RACF system macros
  forms of the macro 1
RACHECK macro 293
  chart of parameters by release 300
  description 293
  example 302
  execute form 305
  list form 303
  profile checking 306
  return codes 301
  standard form 293
  syntax 293, 303, 305
  used to provide authorization checking 293
RACINIT macro 308
  chart of parameters by release 313
  description 308
  example 158, 315, 316, 323, 324
  execute form 317

RACINIT macro *(continued)*
list form 316
return codes 315
standard form 308
syntax 308
used to provide user identification and verification 308
RACLIST macro
chart of parameters by release 322
description 320
example 323
execute form 325
list form 324
return codes 322
standard form 320
syntax 320
used to build in-storage profiles 320
RACROUTE macro 8, 387
chart of parameters by RACROUTE keywords 9
chart of RACROUTE keywords by parameters 9
description 8
description (on MVS prior to Release 1.9) 326
examples 18
execute form 20
invoking the SAF router 389, 390
list form 18
modify form 21
return codes 17
standard form 13
syntax 13
used to invoke SAF 8
RACROUTE REQUEST=AUDIT macro
description 23
examples 27
execute form 28
list form 27
modify form 29
return codes 26
standard form 23
syntax 23, 27, 28, 29
RACROUTE REQUEST=AUTH macro
description 30
example 47
execute form 52
list form 49
modify form 56
profile checking 52, 56
return codes 44
return codes (class descriptor table-default) 47
standard form 31
syntax 31, 49, 52, 56
used to provide authorization checking 30
RACROUTE REQUEST=DEFINE macro
description 59
example 81, 82, 83
execute form 86
list form 83
modify form 90
return codes 76
standard form 60
syntax 60, 86, 90
RACROUTE REQUEST=DEFINE macro *(continued)*
used to define, modify, or delete resource profiles 59
RACROUTE REQUEST=DIRAUTH macro
description 93
examples 96
execute form 97
list form 96
modify form 98
return codes 95
standard form 93
syntax 93, 96, 97, 98
RACROUTE REQUEST=EXTRACT macro
description 99
example 124, 125, 128
execute form 132
list form 130
modify form 135
return codes 120
standard form 101
syntax 101, 130, 132, 135
used to retrieve fields from user profile 99
RACROUTE REQUEST=FASTAUTH macro
description 137
execute form 147
list form 146
used to check a user's authorization to a resource 137
RACROUTE REQUEST=LIST macro
description 149
example 158
execute form 160
list form 159
modify form 161
return codes 156
standard form 150
syntax 150
used to build in-storage profiles 149
RACROUTE REQUEST=SIGNON macro
description 163
return codes 171
syntax
Execute Form 178
List Form 176
Modify Form 180
Standard Form 164
RACROUTE REQUEST=STAT macro
description 182
execute form 189
list form 188
modify form 190
used to determine if RACF is active 182
RACROUTE REQUEST=TOKENBLD macro
description 190
example 196
execute form 198
list form 197
modify form 200
return codes 196
standard form 191
syntax 191

RACROUTE REQUEST=TOKENBLD macro *(continued)*
used to build a UTOKEN 190
RACROUTE REQUEST=TOKENMAP macro
description 201
examples 204
execute form 205
list form 204
modify form 206
return codes 203
standard form 202
syntax 202, 204, 205, 206
used to access token fields 201
RACROUTE REQUEST=TOKENXTR macro
description 206
examples 209
execute form 210
list form 209
modify form 210
return codes 208
standard form 207
syntax 207, 209, 210
used to extract a token 206
RACROUTE REQUEST=VERIFY macro
description 211
example 234
execute form 237
list form 234
modify form 240
return codes 231
standard form 212
syntax 212, 234, 237, 240
used to provide user identification and verification 211
RACROUTE REQUEST=VERIFYX macro
description 243
example 256
execute form 259
list form 257
modify form 261
return codes 253
standard form 244
syntax 244, 257, 259, 261
used to build a UTOKEN 243
RACSTAT macro
chart of parameters by release 335
description 334
execute form 336
list form 336
used to determine if RACF is active 334
RACXTRT macro
chart of parameters by release 347
description 337
execute form 351
list form 350
return codes 348
standard form 338
syntax 338, 350, 351
used to retrieve fields from user profile 337
reason codes
from ICHRFX02 exit routine 144, 145, 268, 269
repeat groups
in database 356
REQUEST=VERIFY parameter
on RACROUTE macro 389
resowner field, DFP 105
return codes
from FRACHECK macro 268
from RACDEF macro 284
from RACHECK macro 301
from RACINIT macro 315
from RACLIST macro 322
from RACROUTE macro 17, 330
from RACROUTE REQUEST=AUDIT macro 26
from RACROUTE REQUEST=AUTH macro 44
from RACROUTE REQUEST=AUTH macro (class descriptor table-related) 47
from RACROUTE REQUEST=DEFINE macro 76
from RACROUTE REQUEST=DIRAUTH macro 94
from RACROUTE REQUEST=EXTRACT macro 120
from RACROUTE REQUEST=FASTAUTH macro 144
from RACROUTE REQUEST=FASTAUTH macro (class descriptor table-related) 146
from RACROUTE REQUEST=LIST macro 156
from RACROUTE REQUEST=SIGNON macro 171
from RACROUTE REQUEST=STAT macro 185
from RACROUTE REQUEST=TOKENBLD macro 195
from RACROUTE REQUEST=TOKENMAP macro 203
from RACROUTE REQUEST=TOKENXTR macro 208
from RACROUTE REQUEST=VERIFY macro 231
from RACROUTE REQUEST=VERIFYX macro 253
from RACXTRT macro 348
from SAF 17
from SAF router exit routine 391
JES handling of the return codes from SAF 392
router exit 387
router table
description 389
what it does 389

S

SAF
callable services router exit 393
SAF (system authorization facility)
external security product 395
ICHRTX00 exit routine 387
invoking the SAF router 389
router exit 387
SAF (System Authorization Facility) 387
how JES handles the return codes 392
SAF return codes 17
SAF router 389
exit routine 389
how entered 389
SAF Router Exit Codes
simulating a call to RACF 391

SAF router exit routine
how it receives control 389
parameter list 390
requirements for 390
return codes 391
simulating a call to RACF 391
uses for 389
security
external product 395
security environment, user 163
security product router module 395
security topics for RACF
classroom courses xiii
shortcut keys 443
STOKEN values
overridden by UTOKEN 190, 243
storage requirement
database profiles 357, 359
system authorization facility
See SAF
System Authorization Facility (SAF) 387
system macros
what the forms mean 1

T

templates
connect 372
data set 374
general 378
group 360
reserved 384
user 362
templates for database
combination field definitions 357
format of field definitions 355
repeat groups 356

U

unit of work
security information propagated from use
session 211
user identification and verification
using RACROUTE REQUEST=VERIFY macro 211
user profile
description of the fields 362
user security environment (ACEE) 163
user template
contents 362
users
maximum number in group 358
UTOKEN
building 190, 243

W

warning mode 44

Readers' Comments — We'd Like to Hear from You

z/OS
Security Server
RACROUTE Macro Reference

Publication No. SA22-7692-03

Overall, how satisfied are you with the information in this book?

	Very Satisfied	Satisfied	Neutral	Dissatisfied	Very Dissatisfied
Overall satisfaction	☐	☐	☐	☐	☐

How satisfied are you that the information in this book is:

	Very Satisfied	Satisfied	Neutral	Dissatisfied	Very Dissatisfied
Accurate	☐	☐	☐	☐	☐
Complete	☐	☐	☐	☐	☐
Easy to find	☐	☐	☐	☐	☐
Easy to understand	☐	☐	☐	☐	☐
Well organized	☐	☐	☐	☐	☐
Applicable to your tasks	☐	☐	☐	☐	☐

Please tell us how we can improve this book:

Thank you for your responses. May we contact you? ☐ Yes ☐ No

When you send comments to IBM, you grant IBM a nonexclusive right to use or distribute your comments in any way it believes appropriate without incurring any obligation to you.

Name _____ Address _____

Company or Organization _____

Phone No. _____

Readers' Comments — We'd Like to Hear from You
SA22-7692-03

Cut or Fold
Along Line

Fold and Tape | **Please do not staple** | Fold and Tape

NO POSTAGE
NECESSARY
IF MAILED IN THE
UNITED STATES

BUSINESS REPLY MAIL

FIRST-CLASS MAIL PERMIT NO. 40 ARMONK, NEW YORK

POSTAGE WILL BE PAID BY ADDRESSEE

IBM Corporation
Department 55JA, Mail Station P384
2455 South Road
Poughkeepsie, NY
12601-5400

Fold and Tape | **Please do not staple** | Fold and Tape

SA22-7692-03

Cut or Fold
Along Line

Program Number: 5694-A01, 5655-G52

Printed in U.S.A.

SA22-7692-03