# Entire Operations

| | | |
|---|---|---|
| | Version 4.1.1 | User's Guide |

software AG

This document applies to Entire Operations Version 4.1.1 and to all subsequent releases.

Specifications contained herein are subject to change and these changes will be reported in subsequent release notes or new editions.

© Copyright Software AG 1988 - 2003.
All rights reserved.

The name Software AG and/or all Software AG product names are either trademarks or registered trademarks of Software AG. Other company and product names mentioned herein may be trademarks of their respective owners.

# Table of Contents

**User's Guide - Overview** . . . 1
User's Guide - Overview . . . 1
**Introduction** . . . 2
Introduction . . . 2
What Is Entire Operations? . . . 2
Operating System Designations . . . 2
Contents of This Documentation . . . 2
System Overview . . . 3
Logging on to Entire Operations . . . 3
Network Maintenance to Reporting . . . 3
API Routines . . . 3
Direct Commands . . . 3
Special Monitor Features and Batch Jobs . . . 3
Messages and Codes . . . 3
Messages in Active Jobs Display . . . 3
Special API Routines for Entire Operations . . . 3
**System Overview** . . . 4
System Overview . . . 4
**User ID** . . . 5
User ID . . . 5
**Owner** . . . 6
Owner . . . 6
**Job Network** . . . 7
Job Network . . . 7
**Job** . . . 8
Job . . . 8
**Subnetworks** . . . 9
Subnetworks . . . 9
Link to the Main Network . . . 9
Time of Activation of a Subnetwork . . . 9
Activation and Execution . . . 10
Symbol Table Activation for Subnetworks . . . 11
**Logical Conditions** . . . 12
Logical Conditions . . . 12
What Are Logical Conditions? . . . 12
Input Conditions . . . 12
Output Conditions . . . 13
**Prerequisite Check** . . . 14
Prerequisite Check . . . 14
Passive Wait . . . 14
Exceptions from Passive Wait . . . 14
Course During Passive Wait for Prerequisites and Resources . . . 15
Prerequisite Check according to the Round-Robin Procedure . . . 15
**Events** . . . 17
Events . . . 17
**End-of-Job Checking and Actions** . . . 18
End-of-Job Checking and Actions . . . 18
End-of-Job Checking and Actions . . . 18
For Users of BS2000/OSD . . . 18
**Resources** . . . 19
Resources . . . 19
What Are Resources? . . . 19
Periods of Resource Allocation . . . 19

Inhibiting a Resource Deallocation, if a Job Ended not ok . . . 20
Manual Emergency Actions . . . 20
Resource Amount Determination by User Routines (Exits) . . . 20
**Mailboxes** . . . 21
Mailboxes . . . 21
What Are Mailboxes? . . . 21
Mailbox SYSDBA . . . 21
**Operating System Server Nodes** . . . 22
Operating System Server Nodes . . . 22
**Master Data Base and Active Data Base** . . . 23
Master Data Base and Active Data Base . . . 23
Master Data Base . . . 23
Active Data Base . . . 23
**Monitor - Server** . . . 24
Monitor - Server . . . 24
Entire Operations Monitor Functions . . . 24
Two Modes of Monitor Operation . . . 24
Subtask(-s) . . . 24
Batch Task . . . 24
Distribute Monitor Functions to Subtasks . . . 25
**Monitor Start Network** . . . 26
Monitor Start Network . . . 26
**Activation** . . . 27
Activation . . . 27
Activating a Job Network or Job . . . 27
Terminology . . . 27
Automatic Activation . . . 27
Automatic Activation - Symbol Prompting . . . 28
Manual Activation . . . 28
**Run Number** . . . 30
Run Number . . . 30
**Schedules** . . . 31
Schedules . . . 31
**Calendars** . . . 32
Calendars . . . 32
**Using Symbols** . . . 33
Using Symbols . . . 33
Symbol Tables . . . 33
Symbol Replacement . . . 33
Active Symbol Table . . . 33
Symbol Escape Characters . . . 34
**Job Control (JCL)** . . . 35
Job Control (JCL) . . . 35
Using Job Control in Entire Operations . . . 35
Symbol Replacement in JCL . . . 35
Usage of Text Modules in JCL . . . 35
**Dynamic JCL Generation (Job Type MAC)** . . . 37
Dynamic JCL Generation (Job Type MAC) . . . 37
What Is Dynamic JCL Generation? . . . 37
Editing and Generation of MAC Jobs . . . 37
Escape Character . . . 37
Variables in Dynamically Generated JCL . . . 38
Sample JCL . . . 38
Symbol Table Variables . . . 39
Natural System Variables . . . 39
Variables from the Parameter Section . . . 39

 Copyright © Software AG 2003

Symbols and Local Variables . . . 39
#GET-SYMBOL . . . 39
#SET-SYMBOL . . . 40
#SET-SYMBOL-M . . . 40
General Notes . . . 40
Examples . . . 40
Inserting Text Modules into the JCL . . . 41
Parameters for Included Text Modules . . . 42
Nested (Recursive) #EOR-INCL Statements . . . 42
Replacement of Parameters within the Text Module . . . 42
Examples . . . 42
Example 1 . . . 42
Example 2 . . . 43
**User Routines (Exits)** . . . 44
User Routines (Exits) . . . 44
**General-Purpose User Routines** . . . 45
General-Purpose User Routines . . . 45
**Front-end User Routines** . . . 46
Front-end User Routines . . . 46
**What User Routines Can Do** . . . 47
What User Routines Can Do . . . 47
**Common User Routine Parameter Area** . . . 48
Common User Routine Parameter Area . . . 48
Common Parameter Area NOPXPL-A . . . 48
Where User Routines Can Be Used . . . 48
Parameters Used for Different Call Places . . . 48
Remarks . . . 49
Predefined Symbols . . . 50
Common Considerations for User Routines . . . 50
Decimal Character (DC) Setting . . . 50
Restrictions . . . 50
**Natural Programs** . . . 51
Natural Programs . . . 51
**Routines to Set Input Conditions** . . . 52
Routines to Set Input Conditions . . . 52
**Routines for End-Of-Job Checking and Actions** . . . 53
Routines for End-Of-Job Checking and Actions . . . 53
**Accessing Entire Operations from other Applications** . . . 54
Accessing Entire Operations from other Applications . . . 54
API - Application Programming Interface . . . 54
**Submission of Jobs by Entire Operations** . . . 55
Submission of Jobs by Entire Operations . . . 55
**Job Execution as a Dummy Job** . . . 57
Job Execution as a Dummy Job . . . 57
Permanent Dummy Jobs . . . 57
Temporary Dummy Jobs . . . 57
Influence on the End-Of-Job Actions . . . 58
Supervision of Running Jobs . . . 58
**Logging Facility** . . . 59
Logging Facility . . . 59
**Error Messages** . . . 60
Error Messages . . . 60
Where Error Messages Are Written to . . . 60
Language of the Error Messages . . . 60
**Reporting Facility** . . . 62
Reporting Facility . . . 62

**Editor** . . . . . 63
Editor . . . . . 63
**Cleanup of the Active Database** . . . . . 64
Cleanup of the Active Database . . . . . 64
Cleaning up the Active Database . . . . . 64
Deleting Work Files . . . . . 64
**Hints on Entire Operations Performance** . . . . . 65
Hints on Entire Operations Performance . . . . . 65
**Job Control for Jobs under BS2000/OSD** . . . . . 66
Job Control for Jobs under BS2000/OSD . . . . . 66
Naming Conventions for Work Files . . . . . 66
User Exit . . . . . 66
**Job Control for Jobs under UNIX** . . . . . 67
Job Control for Jobs under UNIX . . . . . 67
Entire Operations Work Directory . . . . . 67
**Job Control for Jobs under Windows** . . . . . 68
Job Control for Jobs under Windows . . . . . 68
Job Control Characteristics under Windows . . . . . 68
Windows Version Required . . . . . 68
Components Required . . . . . 68
Integration in Entire Operations . . . . . 69
Executing Operating System Functions . . . . . 69
Windows File Systems . . . . . 69
File Names . . . . . 69
Example . . . . . 69
Sysout Redirection . . . . . 69
Entire Operations Work Directory . . . . . 69
Environment Variables . . . . . 70
Job Control . . . . . 70
Job Start and Job Control . . . . . 70
End-of-Job Check . . . . . 70
End-of-Job Actions . . . . . 70
Software AG Editor . . . . . 70
**SAP R/3 Batch Support on UNIX and Windows** . . . . . 72
SAP R/3 Batch Support on UNIX and Windows . . . . . 72
Overview . . . . . 72
Client/Server Infrastructure . . . . . 72
RFC Connections . . . . . 72
R/3 RFC Session Handling . . . . . 73
Job Type R3 . . . . . 73
Script Language for SAP R/3 . . . . . 73
Scheduling . . . . . 73
SAP R/3 Job Submission . . . . . 73
Online Logon to SAP R/3 . . . . . 73
Script Language for SAP R/3 Jobs . . . . . 74
Advantages . . . . . 74
Features . . . . . 74
R/3 Script Language: Syntax Definition . . . . . 74
Script Language Examples . . . . . 76
Installation Notes . . . . . 77
**Using Logical Conditions** . . . . . 78
Using Logical Conditions . . . . . 78
Shaping a Job Network . . . . . 78
Integrating Manual Actions . . . . . 78
Handling Job Failure . . . . . 79
Combining Input Conditions . . . . . 79

 Copyright © Software AG 2003

Example: A or B is TRUE . . . 79
Example: Complex Combinations . . . 80
Not Executing Jobs in Selected Runs . . . 80
**Logging on to Entire Operations** . . . 81
Logging on to Entire Operations . . . 81
**Entire Operations Logon Screen** . . . 82
Entire Operations Logon Screen . . . 82
**Logging on to an Operating System Server Node** . . . 84
Logging on to an Operating System Server Node . . . 84
Logon Process . . . 84
Upper/Lower Case . . . 84
Input Field Defaults . . . 84
Nodes on Mainframes . . . 84
Nodes on UNIX . . . 86
Nodes on Windows . . . 86
SAP R/3 System . . . 87
**Entire Operations Main Menu** . . . 89
Entire Operations Main Menu . . . 89
Entire Operations Main Menu Screen . . . 89
Options on the Main Menu . . . 89
Left Side - Main Menu . . . 89
Right Side - DC Solutions . . . 90
Right Side - Applications . . . 90
Special PF Keys: Main Menu . . . 90
Selecting Options . . . 90
**Entire Operations Screens** . . . 92
Entire Operations Screens . . . 92
Layout and Structure . . . 92
Using PF Keys . . . 93
Selection Windows . . . 94
Confirmation Window when Deleting Items . . . 94
Priority of Command Processing . . . 94
Date and Time Formats . . . 95
Error Messages . . . 95
**Online Technical Information** . . . 97
Online Technical Information . . . 97
**Online Help Facility** . . . 98
Online Help Facility . . . 98
Screen Level . . . 98
Invoking Help from the Main Menu . . . 98
Invoking Help from a System Screen . . . 99
Field Level . . . 100
Help Text . . . 100
Selection Window . . . 101
PF Keys: Online Help . . . 101
**Network Maintenance** . . . 102
Network Maintenance . . . 102
**How to Invoke the Network Maintenance Facility** . . . 103
How to Invoke the Network Maintenance Facility . . . 103
Network Maintenance Screen . . . 103
Column Headings: Network Maintenance . . . 103
Special PF Keys: Network Maintenance . . . 104
Line Commands: Network Maintenance . . . 104
**Selecting Range of Networks to be Listed** . . . 106
Selecting Range of Networks to be Listed . . . 106

**Adding a Job Network Definition** . . . 107
Adding a Job Network Definition . . . 107
Defining a New Network . . . 107
Special PF Keys: Network Addition/Modification . . . 107
Field Descriptions: Network Addition/Modification . . . 108
**Modifying a Job Network Definition** . . . 110
Modifying a Job Network Definition . . . 110
**Network Defaults: Operating System-Specific Entries** . . . 111
Network Defaults: Operating System-Specific Entries . . . 111
**Network Defaults for BS2000/OSD** . . . 112
Network Defaults for BS2000/OSD . . . 112
**Network Defaults for VSE/ESA** . . . 114
Network Defaults for VSE/ESA . . . 114
**Network Defaults for OS/390** . . . 115
Network Defaults for OS/390 . . . 115
**Network Defaults for UNIX and Windows** . . . 116
Network Defaults for UNIX and Windows . . . 116
**Network Defaults for SAP R/3** . . . 118
Network Defaults for SAP R/3 . . . 118
**Applying Network Defaults to Jobs** . . . 119
Applying Network Defaults to Jobs . . . 119
Line Commands: Application of Network Defaults to Jobs . . . 119
**Specifying Recipients for Network Messages** . . . 121
Specifying Recipients for Network Messages . . . 121
Defining Message Recipients . . . 121
Events . . . 121
Message Recipients . . . 121
**Listing Active Jobs for a Network** . . . 122
Listing Active Jobs for a Network . . . 122
**Copying a Job Network Definition** . . . 123
Copying a Job Network Definition . . . 123
**Deleting a Job Network** . . . 125
Deleting a Job Network . . . 125
**Displaying Overview of Job Flow within a Network** . . . 126
Displaying Overview of Job Flow within a Network . . . 126
**Authorizing Other Users to Access a Network** . . . 128
Authorizing Other Users to Access a Network . . . 128
Column Headings: Granting Definition . . . 128
**Checking for a Loop in a Job Network** . . . 130
Checking for a Loop in a Job Network . . . 130
**Listing Jobs** . . . 131
Listing Jobs . . . 131
**Deactivating Active Jobs** . . . 132
Deactivating Active Jobs . . . 132
**Creating Online Documentation for a Network** . . . 133
Creating Online Documentation for a Network . . . 133
**Activating a Job Network Manually** . . . 134
Activating a Job Network Manually . . . 134
Field Descriptions: Network Activation . . . 134
**Display Network Accounting Data** . . . 136
Display Network Accounting Data . . . 136
Displaying Accounting Data for Jobs in a Selected Network . . . 136
Field Descriptions: Date / Run Number Selection . . . 136
Column Headings: Job Accounting Data . . . 137
Special PF Keys: Job Accounting Data . . . 137

 Copyright © Software AG 2003

**Symbol Prompting during Manual Activation** . . . 138
Symbol Prompting during Manual Activation . . . 138
Overview . . . 138
Special PF Keys . . . 138
**Symbol Prompting User Routine** . . . 140
Symbol Prompting User Routine . . . 140
**Scheduling** . . . 141
Scheduling . . . 141
Scheduling a Job Network . . . 141
Scheduling a Job . . . 141
**General Scheduling Considerations** . . . 142
General Scheduling Considerations . . . 142
Optional Schedule Definition . . . 142
Schedule Extraction Times . . . 142
Manual and Automatic Activations on the same Day . . . 142
Influence of Deactivations on Schedules . . . 142
Imported Schedules . . . 142
**Using Calendars** . . . 143
Using Calendars . . . 143
**Defining a Schedule for a Job Network** . . . 144
Defining a Schedule for a Job Network . . . 144
Invoking Schedule Definition . . . 144
Special PF Keys: Schedule Definition . . . 144
Field Descriptions: Schedule Definition . . . 145
Defining Dates for a Network Schedule . . . 147
Monthly Schedule . . . 147
Weekly Schedule . . . 148
Explicit Date Schedule . . . 149
Schedule Modification and Planned Starts . . . 150
Special PF Keys: Planned Starts . . . 150
Cancelling Planned Starts . . . 150
Keeping Planned Starts . . . 151
**Displaying Schedule for a Job Network** . . . 152
Displaying Schedule for a Job Network . . . 152
Special PF Keys: Schedule . . . 152
**Producing Network Start Summary** . . . 154
Producing Network Start Summary . . . 154
**Displaying Next Network Starts - Single Network** . . . 155
Displaying Next Network Starts - Single Network . . . 155
Displaying the Next Network and Job Starts . . . 155
Column Headings: Next Starts . . . 156
Special PF Keys: Next Starts . . . 156
Line Commands: Next Starts . . . 156
Starting a Job Network Manually . . . 157
Symbol Prompting . . . 157
Modifying an Active Symbol Table . . . 157
Field Descriptions . . . 159
Special PF Keys . . . 159
**Displaying Next Network Starts - System-Wide** . . . 160
Displaying Next Network Starts - System-Wide . . . 160
Next Planned Network Starts . . . 160
Column Headings . . . 161
Line Commands . . . 161
Modify Planned Network Start Time . . . 162
**Displaying Network Execution History** . . . 163
Displaying Network Execution History . . . 163

What Is an Execution History? . . . 163
Invoking an Execution History . . . 163
Execution History for a Particular Day . . . 164
Column Headings: Network Start History . . . 164
**Scheduling a Job** . . . 165
Scheduling a Job . . . 165
Defining Scheduling Parameters at the Job Level . . . 165
Time Frames . . . 166
Field Descriptions: Scheduling Parameters . . . 166
Special PF Keys: Scheduling Parameters . . . 167
Sending a Late Message to One or More Users . . . 167
Job Accounting Data . . . 167
Field Descriptions: Date / Run Number Selection . . . 168
Column Headings: Job Accounting Data . . . 169
**Schedule Dependency for a Job** . . . 170
Schedule Dependency for a Job . . . 170
Excluding a Job from Actual Execution . . . 170
Defining Schedule Dependency . . . 170
Field Descriptions: Schedule Dependency Definition for Job . . . 171
Special PF Keys: Schedule Dependency Definition for Job . . . 172
Examples . . . 172
**Turn of the Year** . . . 174
Turn of the Year . . . 174
Schedule Dependencies across the Turn of the Year . . . 174
Deleting Entries . . . 174
**Job Maintenance - Overview** . . . 175
Job Maintenance - Overview . . . 175
**Job Maintenance Facility** . . . 176
Job Maintenance Facility . . . 176
Job Maintenance . . . 176
Job Control (JCL) Definition . . . 176
**Invoking Job Maintenance** . . . 177
Invoking Job Maintenance . . . 177
Displaying the Job Maintenance Screen . . . 177
Column Headings: Job Maintenance . . . 177
Line Commands: Job Maintenance . . . 178
Special PF Keys: Job Maintenance . . . 179
**Adding or Modifying a Job Definition** . . . 180
Adding or Modifying a Job Definition . . . 180
Adding a Job Definition . . . 180
Modifying a Job Definition . . . 180
Job Definition Screen . . . 180
Field Descriptions: Master Job Definition . . . 181
Special PF Keys: Master Job Definition . . . 184
**Job Types** . . . 185
Job Types . . . 185
Entire Operations Job Types . . . 185
Special PF Keys: Master Job Definition . . . 186
**Operating-System-Dependent Job Definitions** . . . 187
Operating-System-Dependent Job Definitions . . . 187
Exceptions . . . 187
BS2000/OSD Specials . . . 187
Field Descriptions: BS2000/OSD Specials . . . 188
OS/390 Specials . . . 190
DOS/VSE Specials . . . 190
Field Descriptions: Special Definitions for DOS/VSE . . . 191

 Copyright © Software AG 2003

UNIX and Windows Specials . . . 191
**Defining a Subnetwork** . . . 193
Defining a Subnetwork . . . 193
Subnetwork Specifics . . . 193
Subnetwork Definition . . . 193
Field Descriptions: Subnetwork Definition . . . 194
**Defining a DAT Target File** . . . 195
Defining a DAT Target File . . . 195
Sub-network Specifics . . . 195
DAT Target File Definition . . . 195
Field Descriptions: DAT Target File . . . 195
Special PF Keys: DAT Target File . . . 196
**Job Dependencies** . . . 197
Job Dependencies . . . 197
Displaying Job Dependencies for a Specific Job . . . 197
Special PF Keys: Job Dependencies . . . 198
Line Commands: Job Dependencies . . . 198
**Displaying Job Dependencies** . . . 199
Displaying Job Dependencies . . . 199
**Connecting Jobs from the Same or Different Networks** . . . 200
Connecting Jobs from the Same or Different Networks . . . 200
Accessing the Function . . . 200
Field Descriptions: Job Connection . . . 200
**Disconnecting Jobs** . . . 202
Disconnecting Jobs . . . 202
Disconnecting Jobs Linked by Conditions . . . 202
Disconnection from a Predecessor Job . . . 203
Disconnection from a Successor Job . . . 203
Restrictions: . . . 203
**Copying a Job Definition** . . . 204
Copying a Job Definition . . . 204
Select an Existing Job Definition as a Model for the New Job . . . 204
Copying JCL of an Existing Job . . . 204
**Deleting a Job Definition** . . . 205
Deleting a Job Definition . . . 205
**Creating Online Documentation for Jobs** . . . 206
Creating Online Documentation for Jobs . . . 206
**No Re-loading after Editing** . . . 207
No Re-loading after Editing . . . 207
**Activating a Single Job Manually** . . . 208
Activating a Single Job Manually . . . 208
Manual Activation of a Single Job . . . 208
Field Descriptions: Job Activation . . . 209
**User-defined Log** . . . 210
User-defined Log . . . 210
Specifying User-defined Log Information . . . 210
Field Descriptions: User-defined Log Data . . . 210
**JCL Log** . . . 212
JCL Log . . . 212
**List Jobs in Subnetwork** . . . 213
List Jobs in Subnetwork . . . 213
(Master and Active) . . . 213
**Defining Prerequisite Resources** . . . 214
Defining Prerequisite Resources . . . 214
List of Prerequisite Resources . . . 214
Column Headings: Prerequisite Resource List . . . 215

Adding a Prerequisite Resource Definition . . . 215
Modifying a Prerequisite Resource Definition . . . 216
Prerequisite Resource Definition (Master) Window . . . 216
Fields: Prerequisite Resource Definition (Master) Screen . . . 216
Selecting a Resource by Wildcard . . . 217
**JCL Locations** . . . 218
JCL Locations . . . 218
Physical Locations for the JCL . . . 218
Restrictions for Job Types . . . 218
Location on another Node . . . 219
Replacing Symbols . . . 219
JCL Loc. PRC: BS2000/OSD DO Procedure . . . 219
JCL Frames for BS2000/OSD DO Procedures . . . 219
Special Commands . . . 219
Example . . . 219
BS2000/OSD Specials . . . 220
UNIX and Windows Specials . . . 221
**Defining the Job Control (JCL) for a Job** . . . 222
Defining the Job Control (JCL) for a Job . . . 222
Adding a JCL Definition . . . 222
Field Descriptions: Master JCL Definition . . . 222
Special PF Keys: Master JCL Definition . . . 223
**Editing JCL or Natural Programs** . . . 225
Editing JCL or Natural Programs . . . 225
**Editing JCL of Macro Jobs** . . . 227
Editing JCL of Macro Jobs . . . 227
Editing JCL of Macro Jobs . . . 227
Natural Source Lines . . . 228
Parameter List . . . 228
Insertion of Text Members and Symbols in Local Variables . . . 228
Special Editor Commands . . . 228
Special PF Keys . . . 228
Run Number Being Used for the TEST Command . . . 228
**Importing JCL to Natural Source** . . . 229
Importing JCL to Natural Source . . . 229
Reasons for Importing JCL to a Natural Library . . . 229
Accessing the Function . . . 229
Field Descriptions: JCL Import from File to Natural Source . . . 230
**Pregeneration of Active JCL** . . . 232
Pregeneration of Active JCL . . . 232
Pregenerating Active JCL to Be Used for Job Submission . . . 232
Special PF Keys: Active JCL Pregeneration . . . 232
**Input Condition Maintenance** . . . 234
Input Condition Maintenance . . . 234
**Input Condition** . . . 235
Input Condition . . . 235
Invoking the Input Condition Maintenance . . . 235
Column Headings . . . 235
Line Commands . . . 237
Special PF Keys . . . 237
**Adding a Master Input Condition** . . . 238
Adding a Master Input Condition . . . 238
Adding Master Input Condition for a Job . . . 238
Special PF Keys . . . 238
Field Descriptions . . . 239

 Copyright © Software AG 2003

**Modifying an Input Condition Definition** . . . . . 241
Modifying an Input Condition Definition . . . . . 241
**Deleting an Input Condition Definition** . . . . . 242
Deleting an Input Condition Definition . . . . . 242
**Input Condition: User Routine** . . . . . 243
Input Condition: User Routine . . . . . 243
Defining a User Routine . . . . . 243
Field Descriptions . . . . . 244
Special PF Keys . . . . . 244
**Input Condition: Multiple Suffixes** . . . . . 245
Input Condition: Multiple Suffixes . . . . . 245
Input Condition: Multiple Suffixes . . . . . 245
Field Descriptions . . . . . 246
Special PF Keys . . . . . 246
**Input Condition: File Existence** . . . . . 247
Input Condition: File Existence . . . . . 247
Input Condition: File Existence . . . . . 247
Field Descriptions . . . . . 248
Special PF Keys . . . . . 248
Variable File Name . . . . . 248
**Input Condition: Mailbox** . . . . . 250
Input Condition: Mailbox . . . . . 250
Mailboxes . . . . . 250
Using Mailboxes with Input Conditions . . . . . 250
Defining the Input Condition . . . . . 250
Field Descriptions . . . . . 251
Special PF Keys . . . . . 251
**Input Condition: User Switch - BS2000/OSD** . . . . . 253
Input Condition: User Switch - BS2000/OSD . . . . . 253
Defining an Input Condition . . . . . 253
Field Descriptions . . . . . 254
Special PF Keys . . . . . 254
**Input Condition: Symbol Value** . . . . . 255
Input Condition: Symbol Value . . . . . 255
Defining an Input Condition that depends on a Symbol Value . . . . . 255
Field Descriptions . . . . . 256
Special PF Keys . . . . . 257
Notes . . . . . 257
Symbol Search Order . . . . . 257
**Input Condition: Job Variable - BS2000/OSD** . . . . . 258
Input Condition: Job Variable - BS2000/OSD . . . . . 258
Defining an Input Condition . . . . . 258
Field Descriptions . . . . . 259
Special PF Keys . . . . . 259
**Global Conditions** . . . . . 260
Global Conditions . . . . . 260
**Input Condition References** . . . . . 261
Input Condition References . . . . . 261
References . . . . . 261
Possible References for Conditions . . . . . 261
Relative Values . . . . . 262
Defaults for Input Condition References . . . . . 262
**Restrictions for Global Conditions** . . . . . 263
Restrictions for Global Conditions . . . . . 263
**Schedule Dependency for Input Condition** . . . . . 264
Schedule Dependency for Input Condition . . . . . 264

**Editing Input Condition User Routines** . . . 265
Editing Input Condition User Routines . . . 265
**Jobs Linked to Input or Output Condition** . . . 266
Jobs Linked to Input or Output Condition . . . 266
**Displaying Currently Active Conditions** . . . 267
Displaying Currently Active Conditions . . . 267
**End-of-Job Checking and Actions - Overview** . . . 268
End-of-Job Checking and Actions - Overview . . . 268
List of End-of-Job Checking and Actions . . . 268
Kinds of End-of-Job Actions . . . 269
End-of-Job Checks for Various Operating Systems . . . 269
**End-Of-Job Actions with Execution as a Temporary Dummy Job** . . . 270
End-Of-Job Actions with Execution as a Temporary Dummy Job . . . 270
Carrying out the End-Of-Job Actions . . . 270
Sysout Actions . . . 270
**End-of-Job Checking and Actions Facility** . . . 271
End-of-Job Checking and Actions Facility . . . 271
Invoking End-Of-Job Checking and Actions . . . 271
Column Headings . . . 271
Line Commands . . . 272
**Adding Event Definition for OS/390 or VSE/ESA Job** . . . 274
Adding Event Definition for OS/390 or VSE/ESA Job . . . 274
Add/Modify Event Definition . . . 274
Field Descriptions: Add/Modify Event Definition . . . 274
**Modifying Event Definition for OS/390 or VSE/ESA Job** . . . 277
Modifying Event Definition for OS/390 or VSE/ESA Job . . . 277
Modifying an Existing Event Definition . . . 277
Example of an A-type Event . . . 277
Example of a C-type Event . . . 278
Example of an R-type Event . . . 279
Example of an S-type Event . . . 280
**Adding Event Definition for BS2000/OSD Job** . . . 281
Adding Event Definition for BS2000/OSD Job . . . 281
Adding an Event Definition . . . 281
Field Descriptions . . . 281
**Modifying Event Definition for BS2000/OSD Job** . . . 283
Modifying Event Definition for BS2000/OSD Job . . . 283
Modifying an Event Definition . . . 283
Example of a U-type Event . . . 283
Example of a V-type Event . . . 284
Field Descriptions: Event Definition . . . 285
Adding or Modifying a Job Variable . . . 286
Field Descriptions . . . 286
Special PF Keys . . . 287
Example of a J-type Event . . . 287
**Adding Event Definition for UNIX or Windows Job** . . . 289
Adding Event Definition for UNIX or Windows Job . . . 289
Adding an Event Definition . . . 289
Field Descriptions . . . 289
Exit Code Check Error Handling . . . 291
**Modifying Event Definition for UNIX or Windows Job** . . . 292
Modifying Event Definition for UNIX or Windows Job . . . 292
**Deleting an Event Definition** . . . 293
Deleting an Event Definition . . . 293
**EOJ Checking Defaults for Various Operating Systems** . . . 294
EOJ Checking Defaults for Various Operating Systems . . . 294

 Copyright © Software AG 2003

OS/390 Defaults for Event Checking . . . 294
Precedence of Event Checks . . . 294
VSE/ESA Defaults for Event Checking . . . 295
Date Formats in VSE/ESA Sysout . . . 295
BS2000/OSD Defaults for Event Checking . . . 295
UNIX and Windows Defaults for Event Checking . . . 295
**Creating Online Documentation for Events** . . . 297
Creating Online Documentation for Events . . . 297
**Adding Output Condition Definitions** . . . 298
Adding Output Condition Definitions . . . 298
Adding Output Conditions for an Event . . . 298
Adding Output Conditions for a Job Event . . . 298
Column Headings . . . 299
Field Descriptions . . . 300
**Modifying Output Condition Definitions** . . . 301
Modifying Output Condition Definitions . . . 301
**Displaying Output Condition Use** . . . 302
Displaying Output Condition Use . . . 302
**Editing End-of-Job Checking User Routines** . . . 303
Editing End-of-Job Checking User Routines . . . 303
Creating or Editing User Routines . . . 303
Example . . . 303
**Defining Activation of Jobs or Job Networks** . . . 305
Defining Activation of Jobs or Job Networks . . . 305
**Defining Recovery Action** . . . 306
Defining Recovery Action . . . 306
Introduction . . . 306
Recovery Action Definition Screen . . . 306
Field Descriptions: Recovery Definition . . . 307
Special PF Keys: Recovery Definition . . . 307
System Symbols for Recovery Actions . . . 308
**Sysout Actions** . . . 309
Sysout Actions . . . 309
Defining Job Sysout Actions . . . 309
Field Descriptions: Sysout Actions . . . 309
**Passing Sysout or Files to Entire Output Management (NOM)** . . . 311
Passing Sysout or Files to Entire Output Management (NOM) . . . 311
**Passing Files to NOM to Process Output** . . . 312
Passing Files to NOM to Process Output . . . 312
**Adding File Definition for NOM** . . . 313
Adding File Definition for NOM . . . 313
**Spool File** . . . 314
Spool File . . . 314
**Output File - Sequential File** . . . 315
Output File - Sequential File . . . 315
Output File - Sequential File Window . . . 315
Carriage Control Type . . . 316
**Handing Over Sysout and Files to NOM** . . . 317
Handing Over Sysout and Files to NOM . . . 317
Repetition if File is Missing or Open . . . 317
Copying Files Before Handing Over to NOM . . . 317
File Copy On Another NPR Node . . . 317
Connection with Defined Recovery Action . . . 317
**Sysout Copy (UNIX/Windows to Mainframe)** . . . 318
Sysout Copy (UNIX/Windows to Mainframe) . . . 318
Defining the Handover of Sysout Files . . . 318

Field Descriptions . . . 319
**Message Sending** . . . 320
Message Sending . . . 320
Introduction . . . 320
Defining a Message . . . 320
**Defining End-of-Job Action User Routine** . . . 321
Defining End-of-Job Action User Routine . . . 321
Specifying a User Routine . . . 321
Field Descriptions: Execute EOJ Action User Routine . . . 321
Special PF Keys: Execute EOJ Action User Routine . . . 322
**Defining Other Actions** . . . 323
Defining Other Actions . . . 323
Invoking the Other Actions Function . . . 323
Special PF Keys: Other Actions . . . 323
**Define Symbol Modification or Setting** . . . 324
Define Symbol Modification or Setting . . . 324
Modifying a Symbol Modification Definition . . . 324
Symbol Modification Definition Screen . . . 324
Field Descriptions: Symbol Modification . . . 325
Special PF Keys: Symbol Modification . . . 325
**Active Job Networks - Overview** . . . 326
Active Job Networks - Overview . . . 326
Overview . . . 326
**Active Database** . . . 327
Active Database . . . 327
Introduction to Jobs and Active Data Bases . . . 327
Maintaining Active Job Networks and Individual Active Jobs . . . 328
**Maintaining Active Job Networks** . . . 329
Maintaining Active Job Networks . . . 329
**Invoking the Active Job Networks Screen** . . . 330
Invoking the Active Job Networks Screen . . . 330
**Active Job Networks List: Details** . . . 331
Active Job Networks List: Details . . . 331
Selecting Network Range to be Listed . . . 331
Column Headings . . . 331
Line Commands . . . 331
Special PF Keys . . . 332
**Deactivating an Active Job Network** . . . 333
Deactivating an Active Job Network . . . 333
Deactivate a Network . . . 333
Deactivate all Networks . . . 334
Stop a Running Network . . . 334
**Operating System Information on Tasks** . . . 335
Operating System Information on Tasks . . . 335
Invoking the All Active Tasks Screen . . . 335
Listing Active Tasks according to Node . . . 335
Listing Active Tasks according to Type . . . 336
Column Headings . . . 336
**Next Scheduled Network Activations** . . . 338
Next Scheduled Network Activations . . . 338
**Displaying Execution History for Network** . . . 339
Displaying Execution History for Network . . . 339
**Listing All Active Jobs** . . . 340
Listing All Active Jobs . . . 340
**Restrictions** . . . 341
Restrictions . . . 341

 Copyright © Software AG 2003

Prerequisites . . . 341
Listing All Active Jobs . . . 341
According to Owner, Network and Job . . . 341
According to Submit User ID . . . 341
According to Status . . . 341
Column Headings . . . 342
Line Commands . . . 342
Special PF Keys . . . 342
**Maintaining Active Jobs** . . . 343
Maintaining Active Jobs . . . 343
**Accessing the Active Jobs Screen** . . . 344
Accessing the Active Jobs Screen . . . 344
Invoking Active Jobs . . . 344
Selection . . . 344
Column Headings: Active Jobs . . . 345
Line Commands: Active Jobs . . . 345
Special PF Keys: Active Jobs . . . 346
**Active Job List: Status Selection** . . . 347
Active Job List: Status Selection . . . 347
**Active Jobs According to Run Number** . . . 348
Active Jobs According to Run Number . . . 348
**Adding a Job to the Active Network** . . . 349
Adding a Job to the Active Network . . . 349
Adding a Job . . . 349
Field Descriptions . . . 349
Special PF Keys . . . 350
Example . . . 350
Achieving a Sequential Flow . . . 351
**Modifying a Job in an Active Network** . . . 352
Modifying a Job in an Active Network . . . 352
**Special Type D - Execution as a Dummy** . . . 353
Special Type D - Execution as a Dummy . . . 353
**Define Job Control for the Active Job** . . . 354
Define Job Control for the Active Job . . . 354
**Exchanging Active JCL** . . . 355
Exchanging Active JCL . . . 355
**Deactivating a Job in an Active Network** . . . 356
Deactivating a Job in an Active Network . . . 356
Deactivating a Job . . . 356
Example: Ad-hoc Deactivation of a Job . . . 356
Ensuring Uninterrupted Job Flow . . . 357
**<Untitled>** . . . 358
Cancelling a Planned Job Activation . . . 358
**Maintain Input Conditions of Active Jobs** . . . 359
Maintain Input Conditions of Active Jobs . . . 359
**Jobs Concatenated with Input Condition** . . . 360
Jobs Concatenated with Input Condition . . . 360
**Modifying EOJ Checking and Actions** . . . 361
Modifying EOJ Checking and Actions . . . 361
**Maintaining Resources for Active Jobs** . . . 362
Maintaining Resources for Active Jobs . . . 362
**Modifying Scheduling Parameters** . . . 363
Modifying Scheduling Parameters . . . 363
**Cancel, Hold and Release Active Jobs** . . . 364
Cancel, Hold and Release Active Jobs . . . 364
Operating System Jobs Handling . . . 364

Cancelling Active Jobs . . . 364
Holding Active Jobs . . . 365
Releasing Active Jobs . . . 365
**Browsing through Active Job Sysout** . . . 366
Browsing through Active Job Sysout . . . 366
Displaying the Job Sysout . . . 366
Sysout Availability . . . 366
OS/390 Sysout Special Commands . . . 368
VSE/ESA Sysout Special Commands . . . 369
**Resubmitting an Active Job** . . . 370
Resubmitting an Active Job . . . 370
**Resubmitting Sub-networks** . . . 371
Resubmitting Sub-networks . . . 371
**No Re-loading after Editing** . . . 372
No Re-loading after Editing . . . 372
**Regeneration or Generation of Active JCL** . . . 373
Regeneration or Generation of Active JCL . . . 373
**Resubmit Job after Re-generation of JCL** . . . 374
Resubmit Job after Re-generation of JCL . . . 374
Resubmitting the Active Job . . . 374
Symbol Prompting on Regeneration of JCL . . . 374
**Re-generation of JCL for Sub-networks** . . . 375
Re-generation of JCL for Sub-networks . . . 375
**Active Jobs Online Documentation** . . . 376
Active Jobs Online Documentation . . . 376
**Displaying Prerequisites for Active Job** . . . 377
Displaying Prerequisites for Active Job . . . 377
Full List of Pending Prerequisites . . . 377
Line Commands . . . 378
**Display Use of an Input Condition** . . . 379
Display Use of an Input Condition . . . 379
**Display Use of Resources** . . . 380
Display Use of Resources . . . 380
**Editing Active JCL** . . . 381
Editing Active JCL . . . 381
**Calling Job Information** . . . 382
Calling Job Information . . . 382
Special PF Key . . . 382
**Maintaining Active Conditions** . . . 383
Maintaining Active Conditions . . . 383
Invoking the Active Condition Maintenance Facility . . . 383
Column Headings: Active Conditions . . . 384
Special PF Keys: Active Conditions . . . 384
Adding Active Conditions . . . 385
Modifying Active Conditions . . . 385
Deleting Active Conditions . . . 386
Display Use of Active Conditions . . . 386
**Mass Deletion of Active Conditions** . . . 387
Mass Deletion of Active Conditions . . . 387
Invoking the Mass Deletion of Active Conditions . . . 387
Field Descriptions: Active Condition Deletion . . . 387
**Calendar Maintenance** . . . 389
Calendar Maintenance . . . 389
**Calendar Maintenance Overview** . . . 390
Calendar Maintenance Overview . . . 390
About Calendars . . . 390

 Copyright © Software AG 2003

User-defined and NOP Calendars . . . 390
How Calendars Work . . . 390
Calendar Types . . . 390
Calendar Names . . . 390
**Calendar Maintenance Facility** . . . 392
Calendar Maintenance Facility . . . 392
Invoking the Calendar Maintenance . . . 392
Column Headings . . . 392
Line Commands . . . 393
Special PF Keys . . . 393
**Adding a Calendar** . . . 394
Adding a Calendar . . . 394
Calendar Definition Window . . . 394
Field Description . . . 394
Calendar Display-Modes . . . 395
Defining Workdays and Holidays . . . 396
Step 1: Defining Weekly Holidays . . . 396
Step 2: Defining Special Holidays . . . 397
**Copying a Calendar** . . . 398
Copying a Calendar . . . 398
**Modifying a Calendar** . . . 399
Modifying a Calendar . . . 399
**Deleting a Calendar** . . . 400
Deleting a Calendar . . . 400
**Displaying a Calendar** . . . 401
Displaying a Calendar . . . 401
**Listing Networks Using a Calendar** . . . 402
Listing Networks Using a Calendar . . . 402
**Calendar Short Description** . . . 403
Calendar Short Description . . . 403
Calendar Short Description Window . . . 403
Field Description . . . 403
**Log Information** . . . 404
Log Information . . . 404
Displaying Logged Information . . . 404
Field Descriptions: Log Display Selection . . . 405
Column Headings: System Log . . . 406
Browse Commands: System Log . . . 406
PF Keys: System Log . . . 407
User-defined Log . . . 407
Output of Log Information . . . 408
Natural Program Call . . . 408
Parameters . . . 408
Example for a Call . . . 408
Example of an Output . . . 409
**Symbols** . . . 411
Symbols . . . 411
**General Overview** . . . 412
General Overview . . . 412
Symbol Tables . . . 412
Symbol Table Search Hierarchy . . . 412
Reserved Symbol Table Names . . . 413
Global Symbols . . . 413
Predefined Symbols . . . 413
Symbol Replacement . . . 414
Master Symbol Table . . . 414

Method 1 . . . . . 414
Method 2 . . . . . 414
Active Symbol Table . . . . . 414
**Master Symbol Table Maintenance** . . . . . 415
Master Symbol Table Maintenance . . . . . 415
**Invoking Master Symbol Tables Screen** . . . . . 416
Invoking Master Symbol Tables Screen . . . . . 416
Invoking the Master Symbol Tables Screen . . . . . 416
Column Headings . . . . . 416
Line Commands . . . . . 417
Special PF Keys . . . . . 417
**Adding a Master Symbol** . . . . . 418
Adding a Master Symbol . . . . . 418
Adding a Master Symbol . . . . . 418
Special PF Keys . . . . . 418
Field Descriptions . . . . . 419
Example . . . . . 420
**Multiple Symbol Values** . . . . . 422
Multiple Symbol Values . . . . . 422
Defining Multiple Symbol Values . . . . . 422
Field Descriptions . . . . . 422
Symbol Replacement . . . . . 423
**Symbol Plausibility Check User Routine** . . . . . 424
Symbol Plausibility Check User Routine . . . . . 424
Symbol Plausibility Check User Routine . . . . . 424
Special Parameters . . . . . 424
Field Descriptions . . . . . 425
Using Adabas and Entire System Server . . . . . 425
Special PF Keys . . . . . 425
**Display/Modify Master Symbol Table** . . . . . 426
Display/Modify Master Symbol Table . . . . . 426
Modify Existing Master Symbol Table . . . . . 426
Column Headings . . . . . 427
Special PF Keys . . . . . 427
**Adding a Symbol to a Symbol Table** . . . . . 428
Adding a Symbol to a Symbol Table . . . . . 428
**Copying a Symbol within a Symbol Table or to another Symbol Table** . . . . . 429
Copying a Symbol within a Symbol Table or to another Symbol Table . . . . . 429
**Modifying Symbol in Symbol Table** . . . . . 430
Modifying Symbol in Symbol Table . . . . . 430
**Numeric Value Check** . . . . . 431
Numeric Value Check . . . . . 431
**Deleting a Symbol from a Symbol Table** . . . . . 432
Deleting a Symbol from a Symbol Table . . . . . 432
**Recursive Symbol Replacement** . . . . . 433
Recursive Symbol Replacement . . . . . 433
Example: . . . . . 433
**Symbol Replacement in Job Control - JCL** . . . . . 434
Symbol Replacement in Job Control - JCL . . . . . 434
**Copying a Master Symbol Table** . . . . . 435
Copying a Master Symbol Table . . . . . 435
Symbol Table Master Definition Copy . . . . . 435
Field Descriptions . . . . . 436
Columns . . . . . 437
**Deleting a Master Symbol Table** . . . . . 438
Deleting a Master Symbol Table . . . . . 438

 Copyright © Software AG 2003

**Listing Jobs Using a Symbol Table** . . . 439
Listing Jobs Using a Symbol Table . . . 439
Listing Jobs Using a Symbol Table . . . 439
Column Headings . . . 439
**Symbol Prompting** . . . 441
Symbol Prompting . . . 441
**Standard Symbol Prompting** . . . 442
Standard Symbol Prompting . . . 442
Symbol Prompting for a Specific Table . . . 442
Line Commands: Symbol Prompting . . . 443
Special PF Keys: Symbol Prompting . . . 443
**Displaying a Help Text for a Symbol** . . . 444
Displaying a Help Text for a Symbol . . . 444
**Cancelling Symbol Prompting** . . . 445
Cancelling Symbol Prompting . . . 445
**Repeating Symbol Prompting** . . . 446
Repeating Symbol Prompting . . . 446
**Entering Long Symbol Values and Modifying Active Symbols** . . . 447
Entering Long Symbol Values and Modifying Active Symbols . . . 447
Entering Long Symbol Values and Modifying Active Symbols . . . 447
Field Descriptions: Active Symbol Modification . . . 448
Special PF Keys: Active Symbol Modification . . . 448
**Accepting All Symbols and Printing Symbols after Prompting** . . . 449
Accepting All Symbols and Printing Symbols after Prompting . . . 449
**User-defined Symbol Prompting** . . . 450
User-defined Symbol Prompting . . . 450
Defining Symbol Prompting User Routines . . . 450
Field Descriptions: Symbol Prompting User Routine . . . 451
Special PF Keys: Symbol Prompting User Routine . . . 451
**Symbol Modification without Prompting** . . . 452
Symbol Modification without Prompting . . . 452
**Parameter List NOPSYP-A** . . . 453
Parameter List NOPSYP-A . . . 453
Parameter List NOPSYP-A . . . 453
Return Codes to Be Set by the Symbol Modification User Routine . . . 454
**Global Symbol Modification Exit** . . . 455
Global Symbol Modification Exit . . . 455
**Symbol Replacement** . . . 456
Symbol Replacement . . . 456
Escape Character and End of Symbol . . . 456
Example: Recursive Symbol Replacement . . . 456
Algorithm . . . 456
Fixed Positions within the Line . . . 456
Symbol Replacement with Multiple Symbol Values . . . 457
Predefined Symbols . . . 457
Symbol Replacement in Subnetworks . . . 457
**Symbol Functions** . . . 463
Symbol Functions . . . 463
**Symbol Function !D, ?D** . . . 464
Symbol Function !D, ?D . . . 464
Syntax . . . 464
Examples . . . 464
Function . . . 465
Return Format . . . 465
Parameters . . . 465
Reference Objects . . . 465

Output Date Formats . . . 466
**Symbol Function !E, ?E** . . . 469
Symbol Function !E, ?E . . . 469
Syntax . . . 469
Examples . . . 469
Function . . . 469
Return Format . . . 469
Parameters . . . 469
Edit Masks for Date Functions . . . 470
**Symbol Functions !MV, ?MV, !MM, ?MM** . . . 472
Symbol Functions !MV, ?MV, !MM, ?MM . . . 472
Symbol Function MV . . . 472
Syntax . . . 472
Examples . . . 472
Function . . . 472
Return Format . . . 472
Parameters . . . 472
Errors . . . 473
Reference Objects . . . 473
Symbol Function MM . . . 473
Syntax . . . 473
Examples . . . 473
Function . . . 473
Return Format . . . 473
Parameters . . . 473
Errors . . . 474
Reference Objects . . . 474
**Symbol Function !W ?W** . . . 475
Symbol Function !W ?W . . . 475
Syntax . . . 475
Parameters . . . 475
Function . . . 477
Return Format . . . 477
**User Routines for Symbol Functions** . . . 478
User Routines for Symbol Functions . . . 478
Symbol Function Syntax . . . 478
Example: §!RANDOM<20,1> . . . 478
Example 1 . . . 478
Example 2 . . . 479
Symbol Function . . . 479
Master JCL . . . 480
Active JCL . . . 480
Active Symbol Table . . . 481
**Symbol Function !TIMN, ?TIMN** . . . 482
Symbol Function !TIMN, ?TIMN . . . 482
Syntax . . . 482
Examples . . . 482
Function . . . 482
Return Format . . . 482
Parameters . . . 482
Reference Objects . . . 483
**Predefined Symbols** . . . 484
Predefined Symbols . . . 484
List of Predefined Symbols . . . 484
Reserved Symbols with Special Meaning . . . 486
UNIX and Windows . . . 486

 Copyright © Software AG 2003

Mainframe Platforms . . . 486
Special Symbol Value . . . 487
**Working with Mailboxes** . . . 488
Working with Mailboxes . . . 488
Displaying Mailbox Messages . . . 488
Remarks . . . 489
Sort Order of Mailbox Messages . . . 489
Access to Messages . . . 489
Column Headings . . . 489
Line Commands . . . 490
Special PF Keys . . . 490
Message Types . . . 490
Waiting for Condition . . . 490
Symbol Prompting . . . 490
Information Messages . . . 491
Origin of Mailbox Messages . . . 492
Group Mailbox . . . 492
SYSDBA Mailbox . . . 492
User Mailbox . . . 492
Clearing Mailboxes . . . 492
**Common Objects** . . . 493
Common Objects . . . 493
Message Receiver Table . . . 493
Field Descriptions: Message Receivers . . . 493
Message Destination Types . . . 494
Special PF Keys . . . 495
E-Mail on Mainframes . . . 495
OS/390, VSE/ESA . . . 495
BS2000/OSD . . . 496
E-Mail on UNIX Systems . . . 496
**Reporting** . . . 497
Reporting . . . 497
**Reporting Overview** . . . 498
Reporting Overview . . . 498
Entire Operations Reporting Facility (New Reports) . . . 498
Special PF Key . . . 499
Entire Operations Reporting Facility (Old Reports) . . . 499
Invoking the Old Reports . . . 500
Special PF Key . . . 500
**New Reporting Documentation** . . . 501
New Reporting Documentation . . . 501
General Information . . . 501
Selection . . . 501
Special PF Keys . . . 503
Security . . . 503
Batch Execution . . . 503
Job Logs . . . 503
Network and Job Accounting Data . . . 506
Column Headings . . . 508
Special PF Keys . . . 508
Detail and Summary Displays . . . 509
Network Description . . . 510
Network Description (with JCL) . . . 511
Example 1 . . . 511
Example 2 . . . 512
Network Job Flow Display . . . 513

Schedule of Jobs . . . 514
Network Start Summary . . . 516
Network Schedule Overview . . . 519
Activation Overview . . . 523
Column Headings . . . 527
Special PF Keys . . . 528
Left and Right Scrolling . . . 528
Producing Reports in Batch . . . 530
Log Reports . . . 531
Accounting Data . . . 532
Network Information . . . 532
Network Job Flow . . . 533
Schedule of Jobs . . . 533
Network Start Summary . . . 534
Network Schedule Overview . . . 534
Activation Overview . . . 535
Extended Log Report . . . 536
Cross-References . . . 537
**General Information** . . . 541
General Information . . . 541
Selection . . . 541
Special PF Keys . . . 543
Security . . . 543
Batch Execution . . . 543
**Job Logs** . . . 544
Job Logs . . . 544
Job Logs . . . 544
Displaying the Log - Terminated Jobs . . . 544
Column Headings: Log Report . . . 547
**Network and Job Accounting Data** . . . 549
Network and Job Accounting Data . . . 549
Selecting Accounting Data . . . 549
Field Descriptions: Date / Run Number Selection . . . 551
Column Headings: Job Accounting Data . . . 552
Special PF Keys . . . 553
**Network Description** . . . 554
Network Description . . . 554
Network Description Options . . . 554
Displaying the Network Description (short) . . . 554
Displaying the Network Description (detailed) . . . 555
Displaying the Network Description (with JCL) . . . 555
Example Screens for JCL . . . 556
Field Descriptions: Network Description . . . 558
**Network Job Flow Display** . . . 561
Network Job Flow Display . . . 561
Notes on the above list: . . . 562
**Jobs Schedule** . . . 563
Jobs Schedule . . . 563
Invoking the Jobs Schedule . . . 563
Column Headings: Production Plan . . . 566
**Network Start Summary** . . . 567
Network Start Summary . . . 567
**Network Schedule Overview** . . . 570
Network Schedule Overview . . . 570
Creating the Network Schedule Overview . . . 570
Use of Wildcards . . . 573

 Copyright © Software AG 2003

Field Descriptions: Network Schedule Overview - Windows . . . 574
Column Headings: Network Schedule Overview - Screen . . . 576
**Activation Overview** . . . 577
Activation Overview . . . 577
Invoking Activation Overview . . . 577
Column Headings . . . 580
Special PF Keys . . . 581
Left and Right Scrolling . . . 581
**Producing Reports in Batch** . . . 584
Producing Reports in Batch . . . 584
Log Reports . . . 584
Examples . . . 585
Accounting Data . . . 585
Examples . . . 585
Network Information . . . 586
Examples . . . 586
Network Job Flow . . . 586
Examples . . . 586
Schedule of Jobs . . . 587
Examples . . . 587
Network Start Summary . . . 587
Examples . . . 587
Network Schedule Overview . . . 588
Examples . . . 588
Activation Overview . . . 588
Examples . . . 589
Extended Log Report . . . 589
Report of Used JCL . . . 591
**Cross References** . . . 592
Cross References . . . 592
Displaying Cross References . . . 592
Usage of User Routines . . . 593
Usage of Symbol Tables . . . 593
JCL Usage . . . 594
Field Descriptions for JCL Usage . . . 595
Cross-Reference Listing in Batch . . . 596
**API Routines** . . . 598
API Routines . . . 598
**Application Programming Interface** . . . 599
Application Programming Interface . . . 599
**List of Available Entire Operations API Routines** . . . 600
List of Available Entire Operations API Routines . . . 600
**Using the API Routines** . . . 601
Using the API Routines . . . 601
**Invoking the API Routines** . . . 602
Invoking the API Routines . . . 602
**Inquire Network and Job Status, Symbol Table** . . . 603
Inquire Network and Job Status, Symbol Table . . . 603
Inquire the Current Status of an Active Job Network . . . 603
Inquire Status of Whole Active Network . . . 605
Inquire Status of all Jobs of an Active Network Individually . . . 605
Inquire Symbol Table Used . . . 605
**Accessing Calendars and Schedules** . . . 606
Accessing Calendars and Schedules . . . 606
Accessing Dates within Calendars or Schedules . . . 606
Example for Using NOPUCS1N . . . 608

**Accessing Entire Operations Conditions** . . . 609
Accessing Entire Operations Conditions . . . 609
Handling Entire Operations Conditions . . . 609
Description of the Function Codes . . . 611
**Accessing Entire Operations Master Resources** . . . 612
Accessing Entire Operations Master Resources . . . 612
Handling Entire Operations Master Resources . . . 612
Description of the Function Codes . . . 613
**Handling of Resource Allocations** . . . 614
Handling of Resource Allocations . . . 614
**Accessing Entire Operations Symbols** . . . 621
Accessing Entire Operations Symbols . . . 621
Handling Entire Operations Symbols . . . 621
Description of the Function Codes . . . 623
Sequential Reading in a Symbol Table . . . 623
Example of Sequential Symbol Table Reading . . . 624
**Activation of Job Networks or Jobs** . . . 625
Activation of Job Networks or Jobs . . . 625
Trigger Activation of Job Networks or Jobs . . . 625
Activation with Symbol Modification . . . 627
**Writing Messages to the SAT Log** . . . 628
Writing Messages to the SAT Log . . . 628
**Expanding Message Texts** . . . 631
Expanding Message Texts . . . 631
**Importing Operating System Jobs into the Active Queue** . . . 632
Importing Operating System Jobs into the Active Queue . . . 632
**Display of Long Texts for Symbol Prompting** . . . 634
Display of Long Texts for Symbol Prompting . . . 634
**Generating Sysout File Names for BS2000/OSD** . . . 635
Generating Sysout File Names for BS2000/OSD . . . 635
Generating Sysout File Names for BS2000/OSD . . . 635
Rules for Exit Coding . . . 636
Use with Work File Deletion . . . 637
Example . . . 637
**Checking Use of BS2000 User IDs** . . . 638
Checking Use of BS2000 User IDs . . . 638
Example . . . 638
**Job Schedule Inquiry and Modification** . . . 639
Job Schedule Inquiry and Modification . . . 639
**Subnetworks: Inquire Calling Job or Called Network** . . . 640
Subnetworks: Inquire Calling Job or Called Network . . . 640
**Starting and Stopping the Monitor Activity Log** . . . 641
Starting and Stopping the Monitor Activity Log . . . 641
**Entire Operations Version Information** . . . 642
Entire Operations Version Information . . . 642
**Example of Use of API-Routines** . . . 643
Example of Use of API-Routines . . . 643
Invoking . . . 643
Source Code . . . 643
**Retrieve Numbers of Active Jobs in Defined Status Ranges** . . . 655
Retrieve Numbers of Active Jobs in Defined Status Ranges . . . 655
Function Call . . . 655
Description of the Function Codes . . . 655
**Special Monitor Features and Batch Jobs** . . . 657
Special Monitor Features and Batch Jobs . . . 657
Monitor Start Network . . . 657

 Copyright © Software AG 2003

Execution . . . . . 657
Day Start Network . . . . . 657
Day Start Execution . . . . . 657
Common Start Network Considerations . . . . . 658
Exclusive Execution . . . . . 658
Use . . . . . 658
Cleanup in Batch Mode . . . . . 658
Parameter for CLEAN . . . . . 659
Example for CLEAN . . . . . 659
Cleanup of Mailbox Messages to SYSDBA . . . . . 659
Parameter for MX-DEL1P . . . . . 659
Example for MX-DEL1P . . . . . 659
**Special API Routines for NOP** . . . . . 660
Special API Routines for NOP . . . . . 660
Introduction . . . . . 660
Required LFILE Assignments . . . . . 660
Log Selection File - Format 1 . . . . . 660
Extract Log Data to Log Selection File . . . . . 662
Delete Old Data in Log Selection File . . . . . 662
Output of Log Data to a File . . . . . 662
Print Account Information from NOP Log . . . . . 662
Monitor or Task Wait Time Modification . . . . . 663
Monitor Shutdown . . . . . 663
Monitor Start . . . . . 664
BS2000/OSD Jobs . . . . . 664

# User's Guide - Overview

This documentation covers the following topics:

| | |
|---|---|
| Introduction | Provides a general overview of the Entire Operations system. |
| System Overview | Gives a brief description of the entities which must be defined to the system, before full control of batch processing can be passed to Entire Operations, and how Entire Operations uses them.<br>Introduces you to the Entire Operations components and facilities you can use to control and monitor the system. |
| Logging on to Entire Operations | Tells you how to start an Entire Operations session, introduces you to the Entire Operations Main Menu, explains the layout of the system screens and the functions they provide, and describes the online help facility. |
| Network Maintenance | Explains how to define and maintain job networks. |
| Scheduling | Describes how to schedule a job network and a job. |
| Job Maintenance | Explains the Job Maintenance facility and how to define different job types and job dependencies, create and use JCL, create online documentation for jobs, define input conditions and specify resources. |
| End-of-Job Checking and Actions | Describes how to instruct Entire Operations what actions to trigger after a job has terminated. |
| Active Job Networks | Provides information on the maintenance functions you can perform on active jobs and networks using the Active Job Networks option on the Main Menu. |
| Calendar Maintenance | Explains the calendar maintenance facility that can be used to create user-defined calendars which are the basis of schedule tables for jobs and job networks. |
| Log Information | Describes how to display all logged information. |
| Symbols | Provides information on symbol tables, the master symbol table maintenance function, symbol prompting and symbol functions. |
| Mailboxes | Describes how to display mailbox messages. |
| Reporting | Explains the Entire Operations Reporting facility, which makes a number of different reports available: information at the job and event level, information on job network definitions and schedules and overviews of schedules and planned activations. |
| Common Objects | Describes objects and functions which are used in several main functions. |
| API Routines | Provides information on the Application Programming Interface (API) which resides in the Entire Operations library and which is a set of routines that you can invoke from any other Natural application in order to access the internal data of Entire Operations. |
| Special Monitor Features and Batch Jobs | Describes how to define a job network to be executed after each monitor start and before the activation of any other job and the cleanup in batch mode. |
| Special API Routines for NOP | Describes special API routines for Entire Operations which reside in the Entire Operations Natural library (SYSEOR) and which may be used in batch and online. |

Copyright © Software AG 2003 

# Introduction

This section covers the following topics:

- What Is Entire Operations?
- Operating System Designations
- Contents of This Documentation

---

## What Is Entire Operations?

Entire Operations is Software AG's online control and scheduling system for the automatic preparation, handling, monitoring and logging of batch processing in the computer center.

This documentation contains all information relevant to the user of the Entire Operations system.

Before reading this document, you should be familiar with the Entire Operations Concepts and Facilities Documentation, which defines and briefly describes the system entities and facilities referred to in this documentation. For the sake of coherence and clarity, some information contained in the **Concepts and Facilities Documentation** is repeated in the section System Overview in this documentation. You should read this section before starting work with Entire Operations.

A general overview of the product is also available in the Software AG brochure **Entire Systems Management -Easier End-user Access to Data Centers**.

## Operating System Designations

BS2000, MVS and VSE are short designations for the corresponding operating systems, which can be found on the individual screens in this documentation and in the online help. But throughout the remaining text, their long names are consistently used, i.e., BS2000/OSD, OS/390 and VSE/ESA.

| **Operating Systems** | |
|---|---|
| **Short Names** | **Long Names** |
| BS2000 | BS2000/OSD |
| MVS | OS/390 |
| VSE | VSE/ESA |

## Contents of This Documentation

- System Overview
- Logging on to Entire Operations
- Network Maintenance to Reporting
- API Routines
- Direct Commands
- Special Monitor Features and Batch Jobs
- Messages and Codes
- Messages in Active Jobs Display
- Special API Routines for Entire Operations

 Copyright © Software AG 2003

## System Overview

Provides a general overview of the Entire Operations system. This section

- defines product-specific terminology;
- provides an introduction to Entire Operations facilities;
- describes the entities you can define to the system and how Entire Operations uses them.

## Logging on to Entire Operations

Provides general information on the Entire Operations online system. This section

- tells you how to log on to Entire Operations;
- describes the layout of system screens and the functions they provide;
- explains the online help facility;
- introduces you to the Entire Operations Main Menu.

## Network Maintenance to Reporting

Provide a detailed account of Entire Operations functions as entered from the Main Menu and includes examples.

> **Note:**
> The System Administration Services option on the Main Menu is described in the section System Administration Services of the Entire Operations Administration Documentation. It explains how to define the entities and use facilities described in this documentation.

## API Routines

Describes the Application Programming Interface. This is a set of routines that can be invoked from any other Natural application to access Entire Operations' internal data.

## Direct Commands

Describes the Entire Operations direct commands, including full command syntax.

## Special Monitor Features and Batch Jobs

Describes special monitor features.

## Messages and Codes

Contains a full list of Entire Operations messages and codes, with explanations of the message texts and hints as to remedial action where appropriate.

## Messages in Active Jobs Display

Explains all possible system messages that can appear in the Active Jobs display.

## Special API Routines for Entire Operations

Explains some API routines that can access Entire Operations data from other Natural applications.

Copyright © Software AG 2003 

# System Overview

Before full control of batch processing can be passed to Entire Operations, certain entities must be defined to the system. This section gives a brief description of these entities and how Entire Operations uses them.

This section also introduces you to the Entire Operations components and facilities you can use to control and monitor the system.

List of Entire Operations Entities

| | | | |
|---|---|---|---|
| User ID | Owner | Job Network | Job |
| Sub-networks | Logical Conditions | Logical Prerequisites Check | Event |
| End of Job Checking and Actions | Resources | Mailboxes | Operating System Server Nodes |
| Master Data Base and Active Data Base | Monitor - Server | Monitor Start Network | Activation |
| Run Number | Schedules | Calendars | Symbol Tables and Symbols |
| Job Control Language | Dynamic JCL Generation | User Routines (Exits) | Accessing Entire Operations from other Applications |
| Submission of Jobs by Entire Operations | Job Execution as a Dummy Job | Logging Facility | Error Messages |
| Reporting Facility | Editor | Cleanup of the Active Database | Hints on Entire Operations Performance |
| Job Control for Jobs under BS2000/OSD | Jobs Control for Jobs under UNIX | Job Control for Jobs under Windows | SAP R/3 Batch Support on UNIX and Windows |

 Copyright © Software AG 2003

# User ID

In Entire Operations, a user ID can be used to enter the system. Entire Operations user IDs should, but need not be defined to the host TP monitor.

Several users can log on to Entire Operations with the same user ID and password at the same time. For reasons of data security and in order to trace data modifications, however, each user usually has a personal user ID and password.

User IDs are relevant to the following:

- **Security**
  Each user ID is associated with an individual user profile containing authorizations. A profile can be modified by an authorized user (e.g. the system administrator). See the subsection User Maintenance in the the section System Administrator Services of the Entire Operations Administration Documentation);
- **Message switching**
  If a user ID is also defined to the host TP monitor, Entire Operations can send a message to the terminal at which the user ID is logged on (does not apply to BS2000/OSD);
- **Mailboxes**
  A user ID can be associated with up to ten mailboxes through which the user is notified of any pending logical conditions linked to those mailboxes (see the subsection Mailboxes in this section);
- **Logging**
  Entire Operations logs all activities and events occurring within the system, including user activities.

A user ID always has a link to at least one owner (see the following subsection Owner).

Copyright © Software AG 2003 

# Owner

Entire Operations provides ease of use and enhanced security through the concept of owners. This involves dividing job networks into groups by assigning them to an owner name. The system administrator assigns an owner name to a user ID in the User Maintenance facility (see the subsection User Maintenance in the the section System Administrator Services of the Entire Operations Administration Documentation). This owner name is automatically passed to the job network defined by the user.

An owner can thus represent a department or project, or a group of related job networks. Users belonging to a specific owner can perform functions only on those job networks associated with the same owner.

**Note:**
In special cases, a user can be authorized to access networks belonging to other owners. The owner SYSDBA is authorized to access the networks of all owners.

Any number of job networks can be associated with any one owner. A job network name is unique within the System only in combination with its owner name.

Access to most other Entire Operations entities is also owner-dependent. The owner name appears in the top line of most system screens and windows.

The figure below illustrates the links between users, owners and job networks:

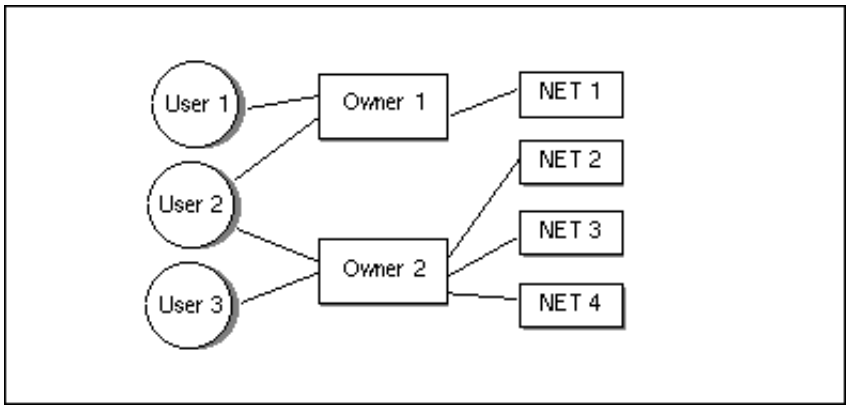


 Copyright © Software AG 2003

# Job Network

A job network is a group of jobs that stand in defined relation to each other. This relation is composed of dependencies, which are expressed as logical conditions. In the simplest case, two jobs in a job network can be linked by the condition: If Job 1 finishes OK, start Job 2 (see the subsection Logical Conditions in this section).

A job network is uniquely defined by its owner and network name. Each network is given a start and deadline time which determine when the network is to be activated. If your installation includes multi-CPU support, you can also specify a default node number for the jobs in the network. This node ID can be overridden at the job level (see the subsection Operating System Server Nodes in this section).

A user can only access a defined job network if his or her user ID is associated with the same owner as the network, unless he has special authorization to access other networks.

A job network or a single job are the units of work that can be activated by Entire Operations. When a job network is activated, it is automatically given a run number that uniquely identifies this network activation. This feature allows several copies of the same job network to run simultaneously.

A job network can be a sub-network of another job network.

Copyright © Software AG 2003 

# Job

In Entire Operations, the term **job** carries a much wider meaning than for the operating system. In the Job Maintenance facility of Entire Operations, the following types of job can be defined:

| Job Type | Explanation |
|---|---|
| CYC | A cyclic job (used for internal checking) |
| DAT | Data File Generation Data File Generation |
| DUM | A dummy job (used to regulate job flow) |
| JOB | A standard operating system job |
| MAC | A job which uses Dynamic JCL Generation (defined using the Natural MACRO facility) |
| NAT | A Natural subprogram |
| NET | A sub-network (see the subsection Sub-networks) |
| R3 | A job in the SAP R/3 runtime system. |
| SRV | A Windows service. |
| STC | A started task (OS/390 only) |

For more details about job types, please see here.

A job can also consist of a **manual action** executed by the user. This action can be integrated into the job network by defining non-automatic prerequisites for it.

All jobs are members of job networks and can be linked by logical conditions. Some differences arise in end-of-job checking, depending on job type and operating system (see the section End-Of-Job Checking and Actions). However, you can always define Job OK or Job not OK as a condition for subsequent system action.

Only job types JOB, MAC, SRV and STC result in operating system jobs when submitted. For OS/390 and VSE/ESA: An operating system job can consist of several steps. In these cases, Entire Operations can check the result of each job step as part of end-of-job analysis and triggers system action accordingly.

A job is uniquely identified within a job network by its job name. The job name can, but need not be the same as the JOB or LOGON statement name (job name by which the operating system identifies the job). Before job submission, jobs can therefore only be identified by the name defined to Entire Operations. A job can only be accessed through Entire Operations by its Entire Operations name.

When defining a job, you must also specify:

- JCL location (depending on job type);
- node ID (if different from the node ID specified for the job network);
- job starting time (optional, otherwise network default used);
- end-of-job action specifications (see the section Job Maintenance for further details).

**Note:**
(OS/390 only) We recommend that the JCL of one Entire Operations job contain only one job card. Entire Operations retains only the first assigned job number of a submitted job.

 Copyright © Software AG 2003

# Subnetworks

The job of NET type enables you to define a subnetwork within a main network. This allows you to build nested networks. The subnetwork must already exist when the definition is created. The same subnetwork can be defined in different jobs of the main network. On activation, each active subnetwork is assigned a unique run number. Subnetworks can in turn be invoked within subnetworks, however a subnetwork cannot invoke itself, because this could cause an infinite recursion.

In the job list of the calling network, you can invoke the job list of the defined subnetwork with the line command Z from the calling job of type NET.

This subsection covers the following topics:

- Link to the Main Network
- Time of Activation of a Subnetwork
- Activation and Execution
- Symbol Table Activation for Subnetworks

---

## Link to the Main Network

An input condition NET-BEGIN and an output condition NET-END must be defined in the subnetwork, as link to the main network. The condition NET-END-NOTOK can be used to set the status "ended not ok".

For more information, see the section Reserved Condition Names in Concepts and Facilities.

| Condition | Description |
|---|---|
| NET-BEGIN | This is an input condition of the first job of the subnetwork. |
| NET-END | This is an output condition of the last job of the subnetwork. |
| NET-END-NOTOK | If this condition is set by the subnetwork, then the job of NET type is treated as **ended not ok**. This condition must be set in addition to NET-END. |

## Time of Activation of a Subnetwork

Subnetworks can be activated at two different times:

- at the time of the activation of the calling network
  The subnetwork is activated together with the calling network (i.e., with the job type NET).
  It will be available from this point in time with run number and active JCL.
  This is the default.
- at the start time (submission) of the calling job of the type NET
  The subnetwork is only activated if the calling job of the type NET is really started.
  This can prevent a subnetwork from even being activated if the calling job is not executed at all later on.
  Moreover, the effort for job activations and loading the JCL is thus compensated for, and the waiting-time for prerequisites within the subnetwork will be shorter.
  Note, however, that the active subnetwork including active JCLs will only exist from a later time onwards.

The **subnetwork activation mode** can be defined as follows:

- as a global default value (see the section Entire Operations Administration Documentation).
- in the definition of the calling job of the type NET (see Defining a Subnetwork).

# Activation and Execution

A subnetwork is activated together with the main network. The subnetwork is assigned its own run numbers. Reserved symbols pass information to the jobs of the subnetwork about which job invoked the subnetwork. These symbols are:

| Symbol | Description |
|---|---|
| P-C-OWNER | Owner of the invoking network. |
| P-C-NETWORK | The invoking network. |
| P-C-JOB | Job of the invoking network. |
| P-C-RUN | Run number of the invoking network. |
| P-C-SUFFIX | Suffix value of the job which invoked the subnetwork where the symbol is used. |
| P-C-SYMBOL-TABLE | Symbol table of the invoking network. |

For a detailed description of the symbols, see the section Symbols.

If the subnetwork has a standard symbol table, these values are entered as symbols in the active copy of this table.

This enables you to trace, even through several steps, from where the subnetwork was invoked.

If the job of NET type can be activated (satisfies all input conditions), the condition NET-BEGIN of the subnetwork is set and the subnetwork starts to work: the NET-type job is then **Executing**. It remains in this status until the subnetwork has set the condition NET-END. Only at this point are the end-of-job checking and actions performed which are defined in the invoking network.

If an execution error occurs in the subnetwork, the executon of the invoking network is also blocked. If the subnetwork sets the condition NET-END before its actual termination (or at its very start), the invoking network continues to run and a parallel asynchronous execution of the networks is possible. However, the user him/herself then becomes responsible for later synchronizing the subnetwork with the invoking network.

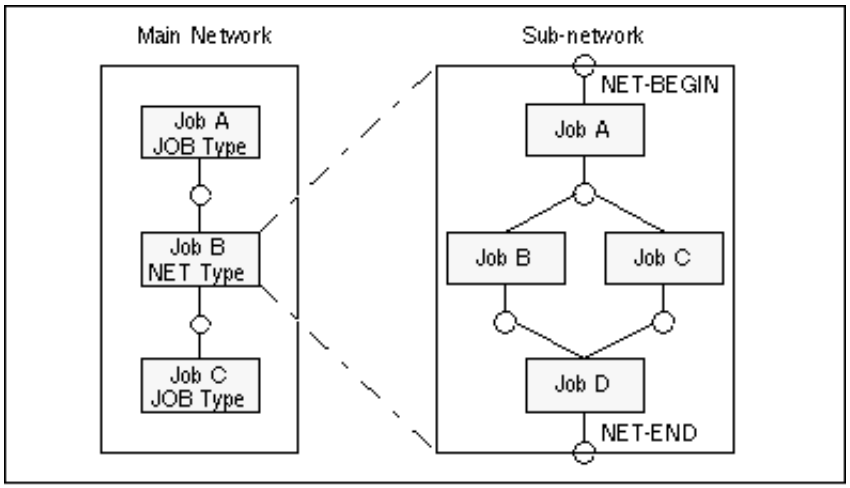


 Copyright © Software AG 2003

# Symbol Table Activation for Subnetworks

The order of symbol table activation for subnetworks is:

1. Set caller info into the active table (P-C-... symbols).
2. Activate symbol table(s).
3. Perform symbol modification exit.

The order of symbol table activation for subnetworks is the same as for main networks.

Copyright © Software AG 2003 

# Logical Conditions

This subsection covers the following topics:

- What Are Logical Conditions?
- Input Conditions
- Output Conditions

---

## What Are Logical Conditions?

Logical conditions are variables within Entire Operations and describe job dependencies. Condition names must be unique within a job network.

An **active condition** reflects the current value of the condition for a given job network activation. It can have the value TRUE (the condition exists) or FALSE (the condition does not exist). The run number assigned to the job network at activation is automatically passed to the conditions defined for the jobs in the network. An active condition is uniquely identified by owner, network, run number and condition name.

In Entire Operations, logical conditions are used in two roles:

- as **input** conditions;
- as **output** conditions.

These are described in more detail below.

Logical conditions can be **global**. You can have only one global condition per name and system. See also the section Job Maintenance.

## Input Conditions

Input conditions are prerequisites for job submission. You can define up to 20 input conditions for a job. If you need more, **dummy** jobs can be inserted to 'collect' an unlimited number of input conditions. Entire Operations does not submit a job until all input conditions and other prerequisites are set (fulfilled). An input condition can be set by the occurrence of an event detected by Entire Operations or manually by the user from the Active Conditions screen in the Job Maintenance facility. It can also be set by a reply to a mailbox request.

If no input condition is defined for a job, Entire Operations assumes a virtual TRUE input condition. This means that this job can be submitted immediately at the (earliest) starting time defined for it, unless the job has other prerequisites such as resources.

Jobs are linked by defining the output conditions of one job as the input conditions of the subsequent job. For more information, see the subsection Input Condition Maintenance in the section Job Maintenance. A quick way to link two jobs is to use the Connect function, in which Entire Operations provides a default condition as an output condition for one job and as input condition for another.

Input conditions can refer not only to the current run of a job network, but also to given time frames in the past or to previous runs.

You can also use an input condition to turn a job into a dummy job when it occurs. For further information on this topic, see Input Conditions and Job Execution as a Dummy Job.

 Copyright © Software AG 2003

# Output Conditions

Output conditions can be set or reset during end-of-job checking of Entire Operations. For each job or job step (operating system job), you can specify any number of possible events. Each event can be associated with up to 20 output conditions. When any of these events occur, Entire Operations automatically sets the associated output conditions and starts those jobs which have these conditions as input conditions (see also the subsection End-Of-Job Checking and Actions in this section).

The figure below illustrates a simple example of two jobs linked by logical conditions:

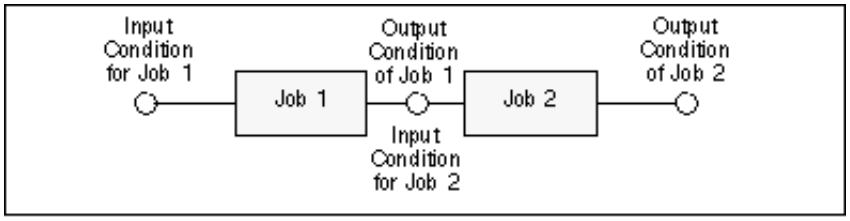


To link the two jobs: an Output Condition of Job 1 is defined as an Input Condition for Job 2.

# Prerequisite Check

Entire Operations uses several procedures to reduce the effort involved for the prerequisite check. These procedures are transparent to the user. Nevertheless, they are explained below.

This subsection covers the following topics:

- Passive Wait
- Prerequisite Check according to the Round-Robin Procedure

---

## Passive Wait

- Exceptions from Passive Wait
- Course During Passive Wait for Prerequisites and Resources

Active jobs waiting for one or several input conditions, resources or for the availability of an operating system server (node) are placed into a particular queue, which removes them temporarily from the active check carried out by the monitor.

Active jobs are **woken up** from the passive wait:

- during setup or deletion of active prerequisites at any location;
- during setup or deletion of resources at any location;
- after modification or deletion of definitions for input conditions and resources in active jobs;
- during monitor start;
- during change of the day;
- by explicit request in System Services Menu / Special Functions.

After a wake up, an active check of the prerequisites, resources and operating system server is carried out again. If the prerequisites required for job start are not met, then another passive wait can result out of this.

### Exceptions from Passive Wait

Please note that **no passive wait** can be carried out in the following cases:

- waiting for an input condition which depends upon the existence of a file;
- waiting for an input condition which depends upon the result of a user routine.

In these cases, Entire Operations **cannot** acknowledge on its own when such a job is to be placed again into the active wait. Therefore, in such a case, an active job is not placed into the passive wait.

Nevertheless, at least for part of the wait, a passive wait can also be carried out for these jobs, if, in parallel to the above mentioned cases, they are waiting for a **normal** prerequisite, which is set up as shortly as possible before job submission.

In other words: it is recommended to replace a wait for prerequisites with special dependencies by a wait for ’normal’ prerequisites.

The following diagram shows the course during passive wait for prerequisites and resources.

 Copyright © Software AG 2003

## Course During Passive Wait for Prerequisites and Resources

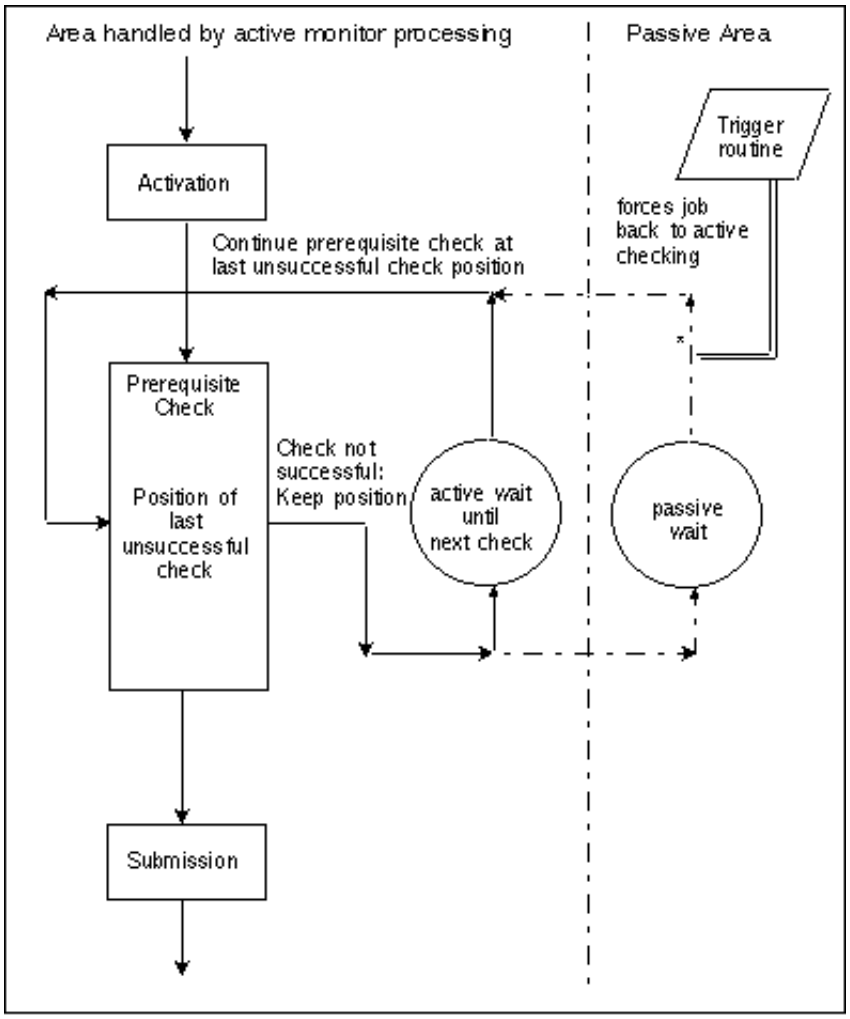


# Prerequisite Check according to the Round-Robin Procedure

If prerequisites and resources of an active job are actively checked, then the order of the job checks will be optimized dynamically.

For a follow-up check, the last unsuccessful check will be the starting point. This prevents successful checks from being redundantly repeated several times. It is guaranteed, however, that immediately before the job start release **all** input conditions and resources have been checked **together at one point in time**.

The following diagram shows the course of the Round-Robin Procedure for the check of prerequisites and resources.

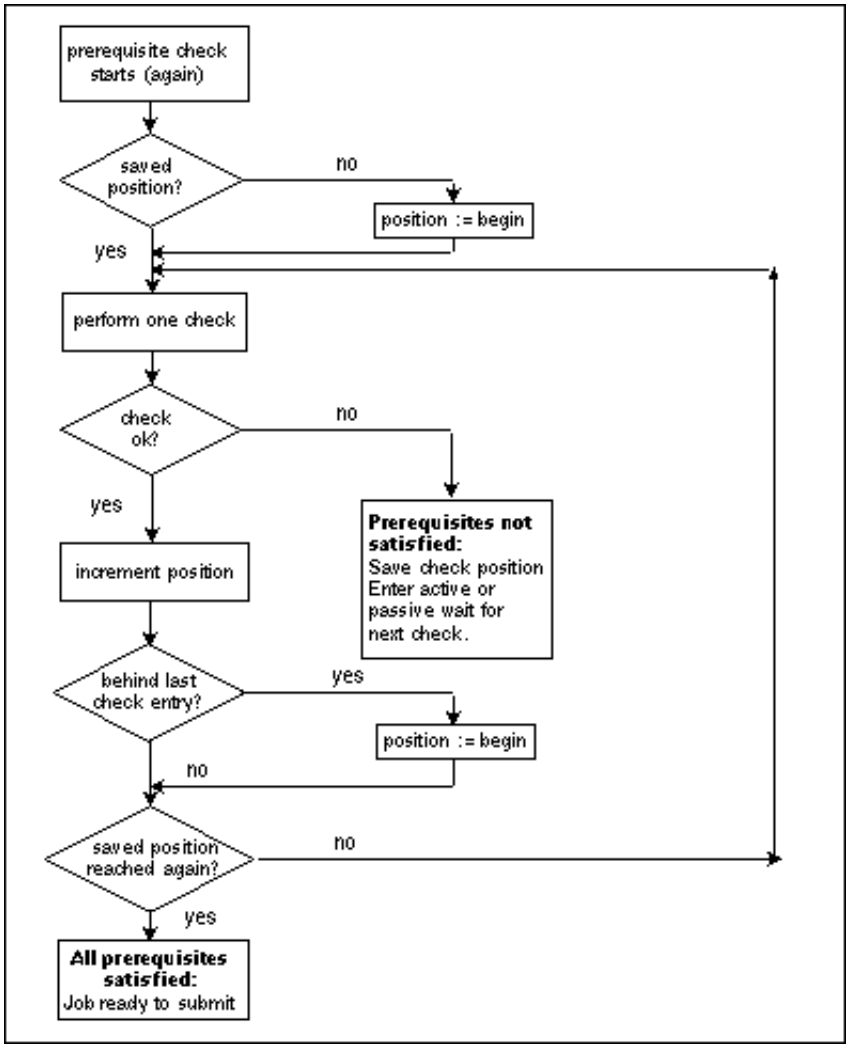


 Copyright © Software AG 2003

# Events

In the terminology of Entire Operations, an event is the occurrence of a defined situation which is recognized during end-of-job analysis. Entire Operations automatically triggers system action, depending on the occurrence of events during job processing (see the section End-of-Job Checking and Actions). Any number of events can be defined for a job.

Some examples of possible defined events are:

- Exit code of a UNIX job equals 2;
- STEP2 of JOB1 ends with a condition code greater than 8;
- No job step ends with a condition code greater than 0;
- A defined message appears in the job sysout;
- A data base or file contains or does not contain certain expected data;
- The result of a user routine (expressed by its return code).
- A job variable contains certain expected data (BS2000/OSD).

Copyright © Software AG 2003 

# End-of-Job Checking and Actions

This subsection covers the following topics:

- End-of-Job Checking and Actions
- For Users of BS2000/OSD

---

## End-of-Job Checking and Actions

End-of-job actions refer to all actions performed after termination of a job. These actions can be performed automatically by Entire Operations or manually by the user.

**End-of-job checking and actions** consists of two steps:

- Analysis of job results (determination of end-of-job status);
- Triggering of appropriate system actions.

Entire Operations recognizes end-of-job status by the occurrence of events predefined by the user. Such an event can be, for example, any of the events described in the previous subsection.

If you do not specify any event, Entire Operations provides a default event expressed as Job OK or Job not OK, depending on whether a received condition code is greater or less than a default condition code, or, for BS2000/OSD, whether certain system messages are received.

For each of the user-specified or default events, you can define how Entire Operations is to act. Such an end-of-job action can consist of any of the following:

- Set output conditions to continue with job flow;
- Send message to user or console with information about any abnormal event or pending condition;
- Print or cancel job sysout data;
- Pass output files or sysout to Entire Output Management;
- Execute user routine;
- Activate other job networks;
- Perform recovery;
- Set job variable (BS2000/OSD only).

See the section End-of-Job Checking and Actions for more information.

## For Users of BS2000/OSD

Entire Operations can only check job sysout if it is assigned to a file. JCL of jobs that are to run under Entire Operations' control must therefore **not** contain sysout assignments to '*dummy', 'primary' or to a temporary file, otherwise no end-of-job-checking is possible.

 Copyright © Software AG 2003

# Resources

This subsection covers the following topics:

- What Are Resources?
- Periods of Resource Allocation
- Inhibiting a Resource Deallocation, if a Job Ended not ok
- Manual Emergency Actions
- Resource Amount Determination by User Routines (Exits)

---

## What Are Resources?

See also the subsection Resources in the section Entire Operations Objects of Concepts and Facilities.

Resources can be prerequisites for a job. Entire Operations does not submit a job until the amount of resource defined is available. You can thus use resources to further control the job flow when all input conditions for jobs that can run parallel are set. You do this by defining the priority with which resources are allocated to a job.

Resources can be

- quantitative or absolute;
- reusable or un-reusable.

Some examples of resources are listed below:

| **Resource** | **Type** |
|---|---|
| Print forms | Quantitative, un-reusable |
| Main storage | Quantitative, reusable |
| Line to a remote machine | Absolute |
| Availability of a device | Absolute |

Each resource must be defined in the System Adminstrator Services as a master resource, before it can be defined as a prerequisite for any job.

The current amount of a master resource can be determined by an exit, which will be invoked periodically by the Entire Operations Monitor. For a detailed discussion, please see here.

Resources can reflect real system resources or they can be virtual. Entire Operations monitors resources as defined in the Network and Job Maintenance facility. See the subsection Defining Prerequisite Resources in the section Job Maintenance for more details.

## Periods of Resource Allocation

Usually a resource is allocated for the duration of a job execution. Before Entire Operations, resources could be allocated only in this way.

Starting with Entire Operations, it is possible to allocate resources for a longer period. This can be defined in the prerequisite resource definition for a job (deallocation mode).

The following types of resource deallocation exist:

| Code | Type | Explanation |
|---|---|---|
| J | Release at job termination (default) | The resource is released when the allocating job terminates. |
| N | Release at network termination | The resource will be released when the Entire Operations Monitor detects that all jobs of a job network are terminated.<br><br>**Note:**<br>To override the automatic detection of "network ended ok", you must set the reserved condition NET-END-OK at least once in your network. |
| K | Keep until manual release | The resource will **not** be released automatically at job or network termination. |

The following additional rules always apply:

- If an active network or job is **deactivated**, all the resources allocated by it will be released too. This will be performed regardless of the defined deallocation mode. That means: Even resources with deallocation mode K (keep) will be released in such a case.
- Master resource amounts can be modified by API calls.
  Note that this is possible only if the amount is not determined by a resource master determination exit.
- Resources can be allocated for a job by an API call. These additionally allocated resources will be handled in the same way as defined prerequisite resources.
- Resources can be deallocated by API calls. Preliminary releases of resources are allowed for deallocation modes.
- All resource allocations and deallocations will be logged.

# Inhibiting a Resource Deallocation, if a Job Ended not ok

It is possible to inhibit a resource deallocation, if a job ended not ok. This can e.g. be used to keep a resource during a recovery for an unsuccessful run. The additional rules apply here, too. That means, such a resource will also be released automatically if the allocating job is deactivated.

# Manual Emergency Actions

All current resource allocations can be inquired in usage lists. From these active resource usage lists it is possible to force the deallocation of a given resource allocation.

Please use this feature with care. Be aware that one or several active jobs may be started immediately, which were way for this resource.

# Resource Amount Determination by User Routines (Exits)

The available amount of a resource can be determined by the usage of an exit. A resource master determination exit will be invoked by the Entire Operations Monitor before prerequisite resource checks.

 Copyright © Software AG 2003

# Mailboxes

This subsection covers the following topics:

- What Are Mailboxes?
- Mailbox SYSDBA

---

## What Are Mailboxes?

Mailboxes are used for message switching to Entire Operations users. If a message requires a reply, it can be prompted in the mailbox window.

Any input condition can be assigned to a user interaction. At the same time, a user ID can be associated with up to ten mailboxes. The message You have mail notifies you of mailbox requests. Invoke the mailbox with the direct command MAIL. You can then take appropriate steps and manually set the conditions necessary for the job to continue.

The concept of mailboxes thus allows you to integrate manual actions into the job network.

The following figure illustrates an example of a mailbox Paper Supply:

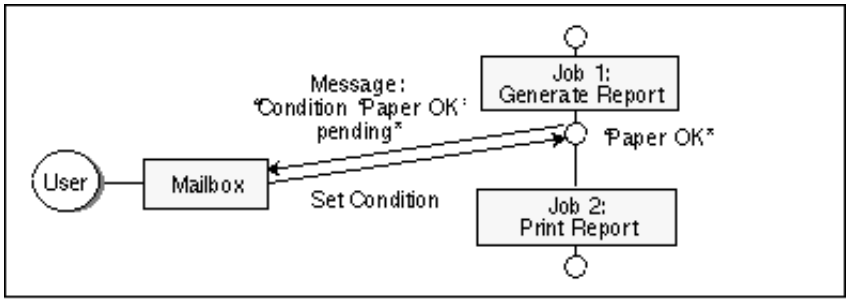


The condition Paper OK is defined as input condition for Job 2.

On receiving the message "Condition ’Paper OK’ pending", you can supply the required amount of paper and set the condition manually, directly in the mailbox window at your terminal. Entire Operations can then proceed with the next job (print report).

## Mailbox SYSDBA

The mailbox SYSDBA, which is accessible for the owner SYSDBA, contains all messages for which no recipient was defined.

You can find a detailed description of all mailbox features in the section Mailboxes.

# Operating System Server Nodes

Nodes are Entire System Server nuclei or NPR/UNIX servers and refer to machines or CPUs on which requests to the operating system are executed. They are distinguished by numerical identifiers in the same way as data base IDs distinguish between different Adabas data bases. Within Entire Operations, each UNIX and Windows server is assigned a node number. More than one operating system server node can reside in one physical machine.

The machines identified by node IDs can run different target operating systems. Entire Operations recognizes the operating system, thus allowing cross-operating-system job control.

Communication paths between otherwise isolated nodes are provided by the Software AG products Entire Net-work and Entire Broker, which allow a transparent connection of nodes, irrespective of how they are physically linked.

When defining a job network in Entire Operations, you can specify default node IDs for the JCL and execution of all jobs in the network. These default node IDs can be overridden for any job, so that different jobs within the same network can run on different machines.

The following figure illustrates multi-CPU support provided by Entire Operations:

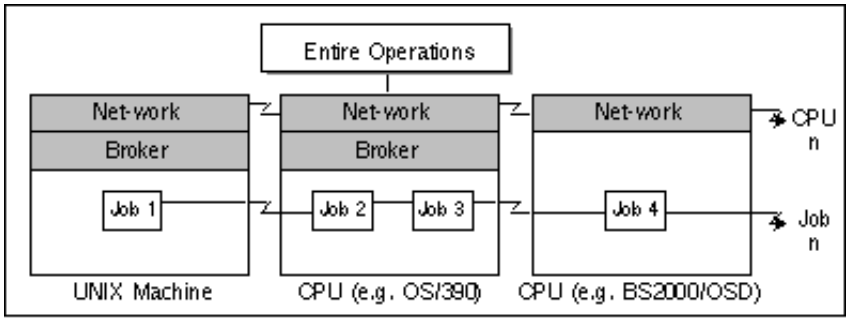


 Copyright © Software AG 2003

# Master Data Base and Active Data Base

This subsection covers the following topics:

- Master Data Base
- Active Data Base

---

## Master Data Base

The **master data base** stores all user, job network, job and scheduling definitions. It also contains all information pertaining to defined logical conditions, resources, calendars, and symbol tables. All information stored on the master data base can be maintained online.

## Active Data Base

When a job network is activated, it is copied to the **active data base**. The active data base can contain several copies of the same job network, each distinguished by its unique run number. All current information pertaining to condition status, job status, active JCL and symbols is contained in and can be modified on the active data base.

The master and active data bases are normally located within the same physical DB file.

Copyright © Software AG 2003 

# Monitor - Server

This subsection covers the following topics:

- Entire Operations Monitor Functions
- Two Modes of Monitor Operation
- Distribute Monitor Functions to Subtasks

---

## Entire Operations Monitor Functions

The Entire Operations Monitor activates and processes job networks according to their scheduled dates and times. This includes the following functions:

- Activation of scheduled job networks;
- Check of prerequisites to job submission (input conditions and resources);
- Job submission;
- End-of-job checking and actions;
- Logging of all events.

## Two Modes of Monitor Operation

- Subtask(-s)
- Batch Task

In technical terms, there are two ways of running the Monitor: as one or several subtask(s) or as a batch task.

### Subtask(-s)

The Monitor can be run as one or several subtask(s) of an Entire System Server task in OS/390 or VSE/ESA operating systems.

The JCL of the Entire System Server task (XCOM node) must be extended to meet the needs of the Monitor. The XCOM parameters must also be extended. The REGION assignment for the Entire System Server task must be large enough to contain the Monitor. For more details, see the section Installation and Customization on Mainframe Platforms in the Entire Operations Installation Documentation.

The advantages of this method are:

- all Entire System Server calls of the Monitor against its host node are handled locally, without any inter-PROCESS communication, and
- Entire System Server and the Entire Operations Monitor share the same address space.

### Batch Task

The Monitor can be run as **its own batch task** in BS2000/OSD.

The Monitor can run as any normal batch job. The functions it provides in this mode are the same as when it runs as an Entire System Server subtask. However, as a batch task, the Monitor requires that the operating system server node must be active all the time it is active itself.

 Copyright © Software AG 2003

From an implementation point of view, the Entire Operations Monitor is a special user within Entire Operations. The difference is that the Monitor is not driven by any terminal input but by its own processing rules.

The system administrator can define a time interval between Monitor **cycles**. At the beginning of a cycle, the Monitor "wakes up" and checks the Entire Operations work queues, performing any necessary actions such as submitting jobs and end-of-job analysis. The time between cycles depends on the number of jobs defined to the system and the average job run time. The shorter the **wait time**, the shorter the interval between job termination and its end-of-job analysis. The price for this is increased overhead due to Monitor reactivation.

# Distribute Monitor Functions to Subtasks

The individual functions that the Entire Operations Monitor performs can be distributed to several subtasks. This subtasking allows processes to run in parallel and increases performance. Monitor functions can be distributed to subtasks under OS/390, VSE/ESA ,BS2000/OSD and UNIX.

For information on how the usual Monitor functions can be distributed, see the subsection Monitor Task Profile in the section System Administrator Services of the Entire Operations Administration Documentation.

# Monitor Start Network

If a job network with the name MON-START is defined under the owner SYSDBA, this network is executed exclusively at **each** Monitor startup. This is called the **start network**.

No other job network is started until the start network is terminated correctly.

The last job of the start network must not **set** any condition (but can **reset** conditions). During execution of the start network, the absolute condition SYSDBA/MON-START-RUNNING is set.

If any job of the start network ends not OK, this condition remains true and blocks any other Monitor action. The condition can be reset manually to free continuation of other processing. While the absolute condition is active, the message **Start Network still running** appears in the log and on the system console during each Monitor pass.

 Copyright © Software AG 2003

# Activation

This subsection covers the following topics:

- Activating a Job Network or Job
- Terminology
- Automatic Activation
- Manual Activation

---

## Activating a Job Network or Job

Activating a job network or job means preparing it for execution. On activation, the following is performed:

- The definitions of jobs, networks, logical conditions, symbol tables etc. are copied to the Entire Operations active data base and assigned a unique run number;
- If necessary, Symbol Prompting is requested. However, symbol prompting is not performed for any subnetworks.
- The global activation exit user routine is invoked, if defined in the Entire Operations defaults;
- The JCL defined for jobs within the network is copied to the Active JCL storage on the active data base;
- Variables (symbols) used in dynamically generated JCL are substituted by their current values. This does not apply to variables defined to be substituted at job submission time;
- The card definitions of active job networks, respectively of active jobs, can differ from the card definitions in the master definition. To allow this, the corresponding symbol tables must contain certain reserved symbols on activation. See also the subsection Predefined Symbols.
- If you use pre-generated JCL, symbol replacement is performed at the time of JCL generation.
- The Entire Operations Monitor recognizes the job network as active and checks time frames, input conditions and resources defined for the jobs. If all prerequisites for any jobs are fulfilled, these jobs are submitted.

## Terminology

In this documentation and on the user interface, the terms "activation" and "network start/job start" are used.

- "Activation" denotes the process of creating an active copy of a network or job definition.
- "Network start/job start" denotes the actual execution start time of the activated/active job network or job.

## Automatic Activation

Job networks are activated **automatically** in two steps:

- At the beginning of a new day or during Monitor startup, all schedules are checked for job networks to be executed during that day. This process is called **schedule extraction** and the data extracted are called the **activation trigger records**.
- The activation trigger records force job network activation a short time before the earliest start of the network. This time span can be defined in the Entire Operations defaults.

**Notes:**

1. If no earliest start time is defined on the network level, the network is activated immediately after schedule extraction.
2. The modification of a calendar or schedule always triggers a schedule extraction for the dependent job

networks. For this reason, a job network could be activated even for the current day after such a modification.

## Automatic Activation - Symbol Prompting

After the creation of an activation trigger record, active symbol tables are created for the specific network run. If there is at least one symbol marked as **to be prompted** within these active tables, a symbol prompt request is sent to the mailboxes of all users defined as message recipients for that network.

The network activation is kept in hold, until any user sees the request and enters or confirms the symbols to be prompted. For this reason, schedule extraction can be performed several days in advance. (See the subsection Global Activation Extraction in the section System Administrator Services of the Entire Operations Administration Documentation).

# Manual Activation

It is also possible to activate a job network **manually** irrespective of any defined schedule. This may become necessary for a number of reasons, for example:

- No schedule has been defined for the job network;
- To override defined activation date and time;
- The job network is not scheduled for the required date.

A job network or job activation can also be triggered by any event within Entire Operations, for example by the termination of another job network or by the Entire Operations Application Programming Interface (API). Like manual activation, this can be performed at any time.

Symbol prompting for active symbols is also performed, when a job or network is activated manually, if at least one symbol of a symbol table used by the job or network is appropriately marked.

 Copyright © Software AG 2003

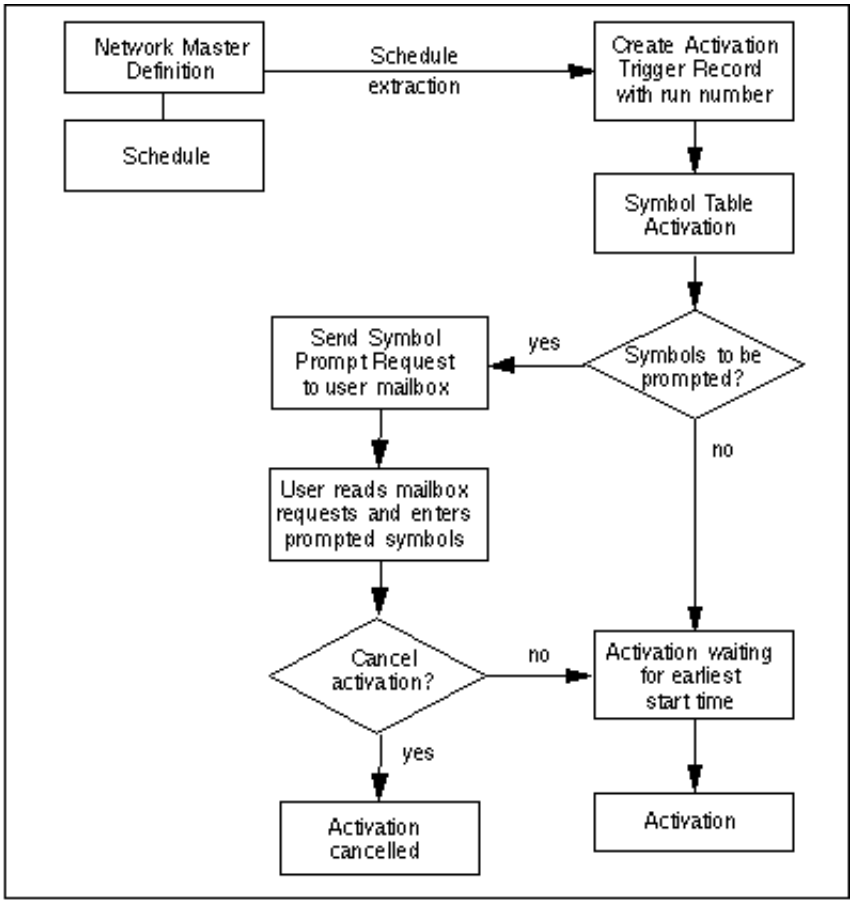
Network Master Definition
Schedule
Schedule extraction
Create Activation Trigger Record with run number
Symbol Table Activation
Symbols to be prompted?
yes
Send Symbol Prompt Request to user mailbox
no
User reads mailbox requests and enters prompted symbols
Cancel activation?
no
Activation waiting for earliest start time
yes
Activation cancelled
Activation

# Run Number

Entire Operations automatically assigns a run number to each active copy of a job network on the active data base. This run number uniquely identifies the active copy of a job network and is automatically passed to its jobs, input conditions, etc.

The run number is assigned:

- during the creation of an activation trigger record;
- during a manual activation;
- if a network is activated by an API routine.

Run numbers are in the range 1 to 99999 by default and are unique on network level. When the maximum run number has been reached, assignment again starts from 1.

The upper limit for run numbers can be modified in the Entire Operations Defaults. For more details, see the section System Administrator Services of the Entire Operations Administration Documentation.

The assignment of a run number for each activation of a job network allows multiple activations of a job network on the same date, and allows you to distinguish between multiple active copies of the same job network.

**Notes:**
There is no guarantee that subsequent activations will have ascending run numbers.
They are as unpredictable as operating system job numbers.
Entire Operations retains the last run number, even for deleted job networks. If you define a new job network of the same name, the new run numbers start from the deleted network's last run number incremented by 1.

 Copyright © Software AG 2003

# Schedules

A schedule is a predefined time table according to which a job network is activated. Entire Operations monitors schedules to determine which job networks are to be activated.

You can define activation dates in a schedule as explicit dates or relative dates (days of the week, days of the month or a combination of days and months).

Entire Operations can optionally account for holidays when activating a network. For example, if you schedule a job network to run on every first day of a month and the schedule table is based on a calendar in which Saturdays and Sundays are defined as non-working days, then Entire Operations does not start the job network if the first day of the month is a Saturday or Sunday. Activation can be postponed until the following working day (Monday). In other words, Entire Operations can automatically interpret the **first day of a month** as the **first working day of a month**.

A schedule can be based on a predefined calendar which distinguishes between working days and non-working days (see the following subsection Calendars).

You can inspect the defined schedule in calendar format, irrespective of whether activation dates are defined as explicit or relative dates: Entire Operations automatically translates relative dates into explicit dates.

You can make the execution of single jobs in a network dependent on their position in the schedule (for example, first schedule day of the week) or in the calendar (for example, last workday of the year).

Copyright © Software AG 2003 

# Calendars

Calendars can form the basis for schedule tables defined for jobs and job networks. An Entire Operations calendar distinguishes between working days and non-working days as defined by the user (weekends, national holidays, personal vacations).

Calendars can be modified to change, include or delete non-working days. Modifications to calendars can affect the associated job network schedule(s).

Calendars are identified by owner, name and year, and can belong to an owner or be used system-wide. You can specify a system calendar or a calendar belonging to your owner for a schedule table, but you can only modify calendars belonging to your owner. System calendars can be modified by authorized users only.

Any number of calendars can be defined to Entire Operations. For further details, see the section Calendar Maintenance.

The following is an example of a calendar:

```
 25.09.01               *** Entire Operations 4.1.1 ***               11:04:04
 Owner EXAMPLE            Calendar EXAMPLECAL Year 2001

                 January              February             March
 Monday       1  8 15 22 29           5 12 19 26           5 12 19 26
 Tuesday      2  9 16 23 30           6 13 20 27           6 13 20 27
 Wednesday    3 10 17 24 31           7 14 21 28           7 14 21 28
 Thursday     4 11 18 25           1  8 15 22           1  8 15 22 29
 Friday       5 12 19 26           2  9 16 23           2  9 16 23 30
 Saturday     6 13 20 27           3 10 17 24           3 10 17 24 31
 Sunday       7 14 21 28           4 11 18 25           4 11 18 25

                 April                May                  June
 Monday          2  9 16 23 30        7 14 21 28           4 11 18 25
 Tuesday         3 10 17 24        1  8 15 22 29           5 12 19 26
 Wednesday       4 11 18 25        2  9 16 23 30           6 13 20 27
 Thursday        5 12 19 26        3 10 17 24 31           7 14 21 28
 Friday          6 13 20 27        4 11 18 25           1  8 15 22 29
 Saturday        7 14 21 28        5 12 19 26           2  9 16 23 30
 Sunday       1  8 15 22 29        6 13 20 27           3 10 17 24

Enter-PF1---PF2---PF3---PF4---PF5---PF6---PF7---PF8---PF9---PF10--PF11--PF12---
      Help        End   Wkdy              Up    Down
```

 Copyright © Software AG 2003

# Using Symbols

This subsection covers the following topics:

- Symbol Tables
- Symbol Replacement

---

## Symbol Tables

Symbol tables are user-defined and contain a list of variables and their current values to be used in normal JCL and Dynamic JCL Generation. The name of the required symbol table must be specified when defining an Entire Operations job of the MAC type, and, if it contains the escape character denoting a variable, also when defining a JOB-type job.

You can maintain symbol tables manually within Entire Operations. Alternatively, they can be modified by programs or user routines by a predefined Natural subroutine (API) delivered with Entire Operations. This allows modification of symbol tables during job network processing.

For an explanation of how to use symbol tables, see the immediately following subsection Symbol Replacement and the subsection Dynamic JCL Generation. Further information can also be found in the section Symbols.

Symbols can also be used within included text modules. For more information, please see the subsection Inserting Text Modules into the JCL of the section Dynamic JCL Generation.

## Symbol Replacement

- Active Symbol Table
- Symbol Escape Characters

Entire Operations enables the text substitution of symbols (variables), regardless of which physical JCL location you use. Symbols are usually replaced during the activation of a job network or job, that is, during the loading of the active JCL to the active data base.

Symbols to be replaced are detected by a preceding **escape character** anywhere in the JCL. The symbol name is limited by a text delimiter, like a blank, a comma (,), a semicolon (;), a period (.), etc. A single period (.) after a symbol is removed during replacement. But two consecutive periods (..) are converted to one period (.). This is important for the dynamic creation of file names. Recursive symbol replacement (symbols within symbols) is also possible.

Entire Operations first searches for a symbol in the active user-specific table. After this, it searches in the master user-defined table, in the network default table, and finally in the system-wide table. If it searches for the symbol in a sub-network, the symbol tables of the calling job of type NET as well as the symbol tables of the superior job networks are searched (in ascending order), if necessary. If the symbol cannot be found anywhere, the job is set to error status.

In certain cases, symbol replacement can even be used in file names, messages texts, etc.

### Active Symbol Table

During activation, an active copy of a symbol table is created by copying it to the active data base. This is then called the **active symbol table**. Symbols to be replaced are taken from the active symbol table. This enables different values of the same symbols to be generated for different runs of the network or job.

For a scheduled network activation you can select, in the network definition, the time to activate the symbol table. This can be either:

- directly after the schedule extraction; this allows enough time for manual symbol replacement;
- or during the network activation. In this case, however, manual symbol replacement is **not** possible.

## Symbol Escape Characters

There are two kinds of escape characters:

- **activation escape character**

  Enables symbol replacement at activation time. This is the usual escape character.

- **submission escape character**

  To enable symbol replacement just before job submission, a second escape character, called the **submission escape**, is supported. This enables the replacement of symbols which can be changed by predecessors during network execution, for example, a volume serial number.

Both activation escape and submission escape characters can be defined as system-wide defaults in the Entire Operations default settings. However, different escape characters can be used for each job, if necessary.

**Note:**
If you change escape character definitions for existing JCL, symbols to be replaced can no longer be detected.
You should never define escape characters already used by other (operating system) JCL features (for example: parameters for DO-Procedures and SUBDTA characters in BS2000/OSD). Do not use the dollar sign $ in BS2000/OSD or UNIX, because it has a special meaning in these operating systems.

Recommended escape characters:

| Operating System | Escape Characters |
|---|---|
| OS/390, etc. | § and $ |
| VSE/ESA | § and # |
| BS2000/OSD | ^ and ′(accent grave) |
| UNIX, Windows | no recommendation |

 Copyright © Software AG 2003

# Job Control (JCL)

This section covers the following topics:

- Using Job Control in Entire Operations
- Symbol Replacement in JCL
- Usage of Text Modules in JCL

---

## Using Job Control in Entire Operations

Job control is used in Entire Operations as follows:

- **Master Job Control**

  This is the JCL in its original format on the original storage medium. The usual JCL storage locations of the various operating systems are supported. The source texts for dynamic JCL generation are also considered Master Job Control.

- **Active Job Control**

  This is the actual JCL submitted to the operating system for execution. It is produced from the Master JCL when the job or network is activated. The symbols are replaced with values from the active symbol table. If it is dynamic JCL, the generation is performed at this time. The active JCL is stored in the active Entire Operations data base.

- **Pregenerated Active Job Control**

  For reasons of performance, it might be necessary to generate active JCL in advance. Pregeneration is invoked with a line command from the Job Maintenance screen.

The JCL must be pregenerated again when:

- the definition of the Master JCL storage has been modified;
- the Master JCL has been edited;
- the corresponding symbol table has been modified.

## Symbol Replacement in JCL

1. Symbols for replacement can be defined for all storage locations of Master JCL.
2. Escape characters for symbols can be assigned system-wide, and they can also be defined individually for each job.
   Defaults for escape characters can be defined for each operating system.
3. Escape characters for symbol replacement must not conflict with other characters used in the JCL.

For more information, please see Using Symbols.

## Usage of Text Modules in JCL

Entire Operations allows the inclusion of text modules into JCL. The text modules can have their own local parameters. Text modules can invoke other text modules, i.e., nesting is possible.

Text module inclusion can be used not only from Macro (MAC) jobs, but also for various other JCL locations.

For information about the text module inclusion, please see Dynamic JCL Generation (Job Type MAC).

 Copyright © Software AG 2003

# Dynamic JCL Generation (Job Type MAC)

This subsection covers the following topics:


- What Is Dynamic JCL Generation?
- Editing and Generation of MAC Jobs
- Escape Character
- Variables in Dynamically Generated JCL
- Symbols and Local Variables
- Inserting Text Modules into the JCL
- Parameters for Included Text Modules
- Nested (Recursive) #EOR-INCL Statements
- Replacement of Parameters within the Text Module
- Examples


---

## What Is Dynamic JCL Generation?

When Entire Operations activates a job network, the JCL of the jobs in the network is copied onto the active data base. Entire Operations provides a facility which allows you to use variables in the original JCL and which can create parts of the JCL depending on program logic. Variables are substituted by their current values either at activation time or at job submission time (see the subsection Symbol Replacement in this section). This is referred to as Dynamic JCL Generation and applies only to MAC-type jobs in Entire Operations.

Dynamically generated JCL is useful if you wish the JCL to contain a step only under certain circumstances, for example, if the current date is YYYYMMDD, include job step X.

Dynamic JCL can be defined for MAC-type jobs using the Edit function in the Job Maintenance facility of Entire Operations. To convert existing JCL to the Entire Operations MAC format, use the JCL-IMPORT function in the job definition with JCL location as NAT. In all cases, the Editor command MACRO must be used to generate the final JCL. The Editor command TEST can be used to test the generated JCL.

## Editing and Generation of MAC Jobs

For the editing and creation of MAC jobs, you must use the built-in SAG Editor.

For further information on special editor commands for MAC jobs, please see Editing JCL of MAC (Macro) Jobs.

## Escape Character

The activation escape character at the beginning of a line distinguishes the line as a Natural statement from the JCL. The use of Natural statements provides full Natural functionality in dynamic JCL, including access to Adabas and Entire System Server. This means you do not need to learn any special control statements. All Natural statements used in dynamic JCL must be coded in structured mode.

Variables are user-defined and can be used in any part of the JCL, including the file name and control card. Variables are distinguished in the JCL by preceding them with an escape character: the **activation escape** denotes variables to be substituted at activation time, the **submission escape** denotes variables to be substituted at job submission time.

**Note:**
These escape characters can be changed by the system administrator. However, this should only be done if absolutely necessary, for example for countries with a different alphabet. See the subsection Symbol Escape Characters above.
It is not advisable to use escape characters which have a defined meaning in a particular operating system or which are already defined as escape characters, e.g. $ in BS2000/OSD or UNIX.

# Variables in Dynamically Generated JCL

- Sample JCL
- Symbol Table Variables
- Natural System Variables
- Variables from the Parameter Section

You can use four types of variables:

- A variable from the symbol table specified for the job;
- A variable from the parameter section (P-...);
- A local variable defined in this Natural program, which can be computed in your program (L-...);
- A Natural system variable (TIME, DATE etc.) which is distinguished by an asterisk (*), for example, *TIME.

**Note:**
All variables with prefixes other than ’P-...’ ’L-...’ or ’*...’ are assumed to be found in the symbol table. Symbol replacement itself (without embedding Natural statements) is also available for standard JCL (JOB-type jobs). See the subsection Symbol Replacement in this section.

## Sample JCL

The following sample JCL illustrates the use of variables in the dynamically generated JCL of a MAC-type job in Entire Operations:

```
§ DEFINE DATA PARAMETER USING NOPXPL-A
§ LOCAL    /* ... ALL LOCALS SHOULD START WITH ’L-’
§ 1 L-01    (A30)
§ 1 CLASS   (A01)     /* FROM SYMBOL TABLE, FOR #GET-SYMBOL
§ END-DEFINE
§ * ------------------------------------
#GET-SYMBOL CLASS
§ COMPRESS P-NETWORK P-JOB INTO L-01
//SNNOPEX  JOB  ,§P-OWNER,MSGCLASS=§MSGCLASS,CLASS=§CLASS
//STEP01   EXEC PGM=NOPCONTI,PARM=’C=0004’
//STEPLIB  DD   DISP=SHR,DSN=§STEPLIB
//* DEVICE: §*DEVICE, INIT-USER: §*INIT-USER, TIME: §*TIME
//* L-01  : §L-01
§ IF CLASS = ’K’      /* SYMBOL USED IN STATEMENT -> #GET-SYMBOL
//* THE CLASS IS §CLASS
§ ELSE
//* ANOTHER MSGCLASS FOUND
§ END-IF
//*
```

The variables used in the JCL are assumed to have the following current values:

 Copyright © Software AG 2003

## Symbol Table Variables

| | |
|---|---|
| **STEPLIB** | NOP.SYSF.DEV.LOAD |
| **CLASS** | K |
| **MSGCLASS** | X |

## Natural System Variables

| | |
|---|---|
| ***DEVICE** | BATCH |
| ***INIT-USER** | EORMON |

## Variables from the Parameter Section

| | |
|---|---|
| **P-NETWORK** | EX131A |
| **P-JOB** | EX-1-24 |
| **P-OWNER** | SN |

When the job is activated, Entire Operations substitutes the variables with their current values. The following JCL is generated as a result:

```
//SNNOPEX  JOB  ,SN,MSGCLASS=X,CLASS=K
//STEP01   EXEC PGM=NOPCONTI,PARM='C0004'
//STEPLIB  DD   DISP=SHR,DSN=NOP.SYSF.DEV.LOAD
//* DEVICE: BATCH, INIT-USER: EORMON
//* L-01  : EX131-A EX-1-24
//* THE CLASS IS K
//*
```

See also the section Job Maintenance.

# Symbols and Local Variables

- #GET-SYMBOL
- #SET-SYMBOL
- #SET-SYMBOL-M
- General Notes
- Examples

To copy symbol values from the (active) symbol table to a local variable in the Macro program and vice versa, the built-in statements #GET-SYMBOL and #SET-SYMBOL can be used.

## #GET-SYMBOL

#GET-SYMBOL can be used within a MACRO JCL to put an active symbol value into a local variable.

The symbol is taken from where it is found first in the symbol search path.

### Syntax

```
#GET-SYMBOL <variable> <value>
```

<value> is optional. If it is not specified, the variable will be filled with the contents of a symbol with the same name.

## #SET-SYMBOL

#SET-SYMBOL can be used within MACRO JCL to set an **active** symbol and its value from a local variable or string.

The symbol will be set in the **active** symbol table which belongs to the active job.

### Syntax

```
#SET-SYMBOL <symbol> <value>
```

<value> is optional. If it is not specified, the symbol will be filled with the contents of a local variable with the same name.

## #SET-SYMBOL-M

#SET-SYMBOL can be used within MACRO JCL to set a **master** symbol and its value from a local variable or string.

The symbol will be set in the **master** symbol table which belongs to the active job.

### Syntax

```
#SET-SYMBOL-M <symbol> <value>
```

<value> is optional. If it is not specified, the symbol will be filled with the contents of a local variable with the same name.

## General Notes

Text strings must not contain blanks.

Blanks are used as separators for the parameters of #GET-SYMBOL and #SET-SYMBOL.

## Examples

(The activation escape character is §.)

 Copyright © Software AG 2003

| Statement | Description |
|---|---|
| #GET-SYMBOL J | Move the contents of symbol J to the local variable J. |
| #GET-SYMBOL #J §BB | Move the contents of symbol BB to the local variable #J. |
| #GET-SYMBOL #J ’§BB’ | Move the contents of symbol BB to the local variable #J. |
| #GET-SYMBOL L-MULT ’§?MV<M1,§I>’ | Move the result of a symbol function call into the local variable L-MULT. |
| #SET-SYMBOL J | Set the **active** symbol J to the contents of the local variable J. |
| #SET-SYMBOL I #A | Set the **active** symbol I to the contents of the local variable #A. |
| #SET-SYMBOL AA ’text’ | Set the **active** symbol AA to the value ’text’. |
| #SET-SYMBOL BB §I | Set the **active** symbol BB to the contents of symbol I. |
| #SET-SYMBOL BB ’§I’ | Set the **active** symbol BB to the contents of symbol I. |
| #SET-SYMBOL CC ’§D.§E’ | Concatenate symbol values of D and E, and put the result into the **active** symbol CC. |
| #SET-SYMBOL-M DD ‡valueŸ | Set the **master** symbol DD to the value ’valueŸ. |

# Inserting Text Modules into the JCL

You can insert Natural text modules anywhere in your JCL.

This feature is not limited to jobs of type MAC (Macro), but can also be used from within standard JCL.

The syntax is as follows:

```
#EOR-INCL LOC=NAT LIB=<library> MEM=<member>
```

## Parameters of the #EOR-INCL Statement

| Parameter | Description |
|---|---|
| LOC | Location<br>**NAT** Natural text member<br>This is the only location which is currently allowed for text modules. |
| LIB | Library of the text module |
| MEM | Name of the text module |

If the text module cannot be read, the JCL generation will be aborted with an error message.

Symbol replacement is possible within the #EOR-INCL statement.

**Note:**

Before Entire Operations 4.1.1, the statement #INCLUDE was available for inclusion. This is still supported in Entire Operations 4.1.1, but will not be supported in future. For #INCLUDE, the following features will not be supported. It is recommended to convert #INCLUDE statements into #EOR-INCL statements with Entire Operations 4.1.1.

# Parameters for Included Text Modules

You may invoke included text modules with specific parameters.

For each parameter you want to pass to the text which is included by an #EOR-INCL statement, you must code an #EOR-PARM line in front of the #EOR-INCL statement.

These parameters will be in effect only for the text included (and all nested inclusions) in the following #EOR-INCL statement.

The syntax is as follows:

```
#EOR-PARM <parameter> = <value> [<parameter> = <value> ]
```

Multiple parameters can be passed on the #EOR-PARM line.
This is limited by the line size.

Parameter values implicitly have the format A (alphanumeric).

Parameter values may contain blanks. In this case, they must be included in apostrophes () or double quotes ().

# Nested (Recursive) #EOR-INCL Statements

You may use nested #EOR-INCL statements inside modules, which have already been included. These nested inclusions may have their own parameter lists.

**Note:**

Be aware that the total number of inclusions for a JCL is limited by the Natural Editor buffer size for the Natural task executing.

# Replacement of Parameters within the Text Module

Parameters for text modules can be used within the included text module like any other symbol. They have precedence over the symbols of the current symbol table of the job (and the other symbol tables in the search hierarchy).

Therefore, parameters for included text members can temporarily override symbols with the same name. The scope of a parameter is only the included text module, and the text modules which are invoked from within this text module by nested calls.

The lifetime of parameters defined via #EOR-PARM is JCL load time only.
Normal symbol replacement can be used within included text modules like everywhere else in the JCL.

# Examples

## Example 1

```
#EOR-INCL LOC=NAT LIB=JCLLIB MEM=§MEMBER
```

Include the Natural member, the name of which is in the symbol MEMBER, from the library JCLLIB.

 Copyright © Software AG 2003

# Example 2

```
#EOR-PARM DBID = 9
#EOR-PARM TEXT-1 = a string with blanks
#EOR-INCL LOC=NAT LIB=USERLIB MEMBER=BLOCK1
//* JCL statement
#EOR-PARM DBID = 10
#EOR-PARM TEXT-1 = another string
#EOR-INCL LOC=NAT LIB=USERLIB MEMBER=BLOCK1
```

Include the Natural text member BLOCK1 from the library USERLIB. The parameters DBID and TEXT-1 are passed to the text module, with different values for the 2 invokings.

# User Routines (Exits)

This subsection covers the following topics:

- General-Purpose User Routines
- Front-end User Routines
- What User Routines Can Do
- Common User Routine Parameter Area
- Natural Programs
- Routines to Set Input Conditions
- Routines for End-Of-Job Checking and Actions

 Copyright © Software AG 2003

# General-Purpose User Routines

Monitor user routines must be coded as Natural subprograms and are automatically invoked by the Entire Operations Monitor according to where they are defined. User routines must reside in a Natural library on the FUSER System file, but may not reside in the Entire Operations library.

When user routines are coded as Natural subprograms, they are distinguished as one of the possible types by information specified in a parameter section.

You can define the following types of monitor user routines:

- Routines to Check Symbol Values (Plausibility Check);
- Dynamic JCL Generation;
- Natural Programs Defined as Jobs within a Job Network (NAT-type Jobs);
- Routines to Set Input Conditions;
- Routines for End-of-Job Checking;
- Routines for End-of-Job Actions;
- Generation of Sysout File Names (BS2000/OSD only);
- ‡Symbol not FoundŸ Exit;
- Resource Master Determination.

# Front-end User Routines

Front-end user routines are coded as Natural subprograms and are invoked by the Entire Operations front end for specific processing.

They can use any user-defined map with the following restrictions:

- The map (Natural object, type M) must be accessible from the Entire Operations library SYSEOR. The easiest way is to copy the required maps into the Entire Operations library.
- Note that Entire Operations can be executed with the following Natural language codes: 1 = English; 2 = German. So it could be useful to supply two maps and to refer to them with the ampersand & as a placeholder representing the current language code. For more information on this technique, see the subsection **Multilingual User Interfaces** in the **Natural Programmer's Guide**.

You can define the following front-end user routine:

- Symbol prompting for a network or job activation. For more information, see the subsection Symbol Prompting during Manual Activation in the section Network Maintenance.

 Copyright © Software AG 2003

# What User Routines Can Do

User routines can be used to check job results and influence job flow by their return codes. Apart from running checks, however, the use of Entire System Server and Adabas technology allows user routines to perform various actions such as

- Data base updates;
- File access and handling;
- Access to operating system functions;
- Plausibility checks.

User routines for the Monitor can perform any Adabas or Entire System Server function, but **must not** perform any type of screen I/O.

Entire Operations checks for the existence of a user routine while it is being defined, as well as at invocation time. Entire Operations treats the non-existence of a user routine as an error. When such an error occurs at invocation time during job processing, the job network execution is interrupted.

User routines can affect the Entire Operations job flow by sending a return code or other information back to the caller after execution, depending on the type and result of the routine.

**Note:**
User routines are invoked by the Entire Operations Monitor, which performs them as subroutines. Do not forget that intensive use of user routines can influence other work to be performed by the Monitor.

**Warning:**
User routines must **never** end the Natural session by themselves, they **must in all cases** return to the program that called them. In addition, no functions are permitted which disturb the Monitor run, such as calling wait time routines.

The following subsections describe the different types of user routine in more detail.

# Common User Routine Parameter Area

This subsection covers the following topics:

- Common Parameter Area NOPXPL-A
- Where User Routines Can Be Used
- Parameters Used for Different Call Places
- Predefined Symbols
- Common Considerations for User Routines
- Decimal Character (DC) Setting
- Restrictions

---

## Common Parameter Area NOPXPL-A

All user routines under Entire Operations must use the common parameter area NOPXPL-A, which is available in both object and source format in the SYSEOR library.

For this reason, the initial coding of a user routine must always resemble:

```
DEFINE DATA PARAMETER USING NOPXPL-A
```

## Where User Routines Can Be Used

The field P-CALL-PLACE in the parameter list shows from where the user routine was called:

| Value | Description |
|---|---|
| EJA | End-of-Job Action |
| EJC | End-of-Job Checking |
| FSB | Sysout File Name Generation (BS2000/OSD) |
| ICO | Input Condition Value Determination |
| MAC | Parameter List for Dynamic JCL Generation |
| NAT | Natural Program Standalone under Entire Operations (NAT-type Job) |
| RMD | Resource Master Determination Exit |
| SFX | Symbol Function Exit |
| SNF | Global ‡Symbol not FoundŸ Exit |
| SYC | Symbol Plausibility Check |
| SYF | Symbol Functions |

## Parameters Used for Different Call Places

 Copyright © Software AG 2003

| Field Name | Format | Call Place | | | | | | | | | | |
|---|---|---|---|---|---|---|---|---|---|---|---|---|
| P-CALL-PLACE | A03 | EJA | EJC | FSB | ICO | MAC | NAT | RMD | SFX | SNF | SYC | SYF |
| P-RC<br>(Return code) | N04 | out | out | out | out | n/a | out | out | out | out | out | out |
| P-RT<br>(Return text) | A66 | out | out | out | out | n/a | out | out | out | out | out | out |
| P-OWNER | A10 | in | in | in | in | in | in | in | in | in | in | in |
| P-NETWORK | A10 | in | in | in | in | in | in | in | in | in | (3) | in |
| P-JOB | A10 | in | in | in | in | in | in | in | in | in | n/a | in |
| P-RUN | P13 | in | in | in | in | in | in | in | in | in | (3) | in |
| P-ACTIVATION-TIME | T | in | in | in | in | in | in | in (7) | n/a | n/a | (3) | n/a |
| P-EXECUTION-NODE | N03 | in | in | in | in | in | in | in | in | in | n/a | in |
| P-EXECUTION-OPSYS | A08 | in | in | in | in | in | in | in | n/a | n/a | n/a | n/a |
| P-SYMBOL-TABLE | A10 | in | in | in | in | in | in | in | in | in | n/a | in |
| P-CONDITION | A20 | (6) | (6) | n/a | in | (2) | n/a | n/a | (4) | n/a | (4) | (4) |
| P-RESOURCE | A20 | in | n/a | n/a | n/a | n/a | n/a | in | n/a | n/a | n/a | n/a |
| P-SYMBOL | A20 | (1) | n/a | n/a | n/a | n/a | n/a | n/a | n/a | mod | n/a | n/a |
| P-JOB-ID-10 | A10 | out | out | n/a | n/a | n/a | n/a | n/a | n/a | n/a | n/a | n/a |
| P-JOB-NUMBER (9) | N05 | out | out | n/a | n/a | n/a | n/a | n/a | n/a | n/a | n/a | n/a |
| P-SYSOUT-FILE | A54 | (1) | (1) | out | n/a | n/a | n/a | n/a | (5) | n/a | (5) | (5) |
| P-FSB-OBJECT-TYPE | A05 | n/a | n/a | in | n/a | n/a | n/a | n/a | n/a | n/a | n/a | n/a |
| P-FSB-USERID | A08 | n/a | n/a | in | n/a | n/a | n/a | n/a | n/a | n/a | n/a | n/a |
| P-FSB-CATID | A04 | n/a | n/a | in | n/a | n/a | n/a | n/a | n/a | n/a | n/a | n/a |
| P-FSB-SUFFIX | A02 | n/a | n/a | in | n/a | n/a | n/a | n/a | n/a | n/a | n/a | n/a |
| P-SYMBOL-VALUE | A54 | n/a | n/a | n/a | n/a | n/a | n/a | n/a | n/a | out | n/a | n/a |
| R-RMD-OLD-QTY-INITIAL | N7.2 | n/a | n/a | n/a | n/a | n/a | n/a | in | n/a | n/a | n/a | n/a |
| P-RMD-NEW-QTY-INITIAL | N7.2 | n/a | n/a | n/a | n/a | n/a | n/a | out | n/a | n/a | n/a | n/a |
| P-RMD-PARAMETER | A36 | n/a | n/a | n/a | n/a | n/a | n/a | in | n/a | n/a | n/a | n/a |

## Remarks

1. in; BS2000/OSD only
2. in; contains P-SUFFIX in first 10 bytes
3. in; only for active symbols
4. in; here: P-SYMBOL (A20)
5. in; here: P-SYMBOL-VALUE (A54)
6. in; contains P-JOB-ID (A5) in first 5 bytes
7. in; here: timestamp of previous exit call
8. in; this field should no longer be used. The format is obsolete. It cannot be used for all operating systems.
9. This field should no longer be used. Use P-JOB-ID-10 instead. The size of P-JOB-NUMBER is too small for some operating systems. For compatibility reasons, the field will be filled on return, if the job number is

in the range of 1 to 99999.

# Predefined Symbols

See the subsection Predefined Symbols in the section Symbols for a list of predefined symbols.

# Common Considerations for User Routines

All user routines must return the field P-RC (return code). 0 (zero) means OK.

The field P-RT (return text) can be used optionally to pass back some specific information. Entire Operations writes this text into the log and displays it on the Active Jobs screen, if supplied.

All other parameters pass environment information to the user routine. Some parameters are not always used. See the above table for details.

# Decimal Character (DC) Setting

The parameter area NOPXPL-A contains numbers with decimal characters. The factory setting for decimal character in the delivered source of NOPXPL-A is ‡.Ÿ. If you want to catalog your user routines and Natural programs with another decimal character (e.g. comma, DC=,), you must also modify NOPXPL-A:

- Make sure that the decimal character of your Natural session is set correctly. You can verify this with the direct command GLOBALS.
- Use the Natural Editor to edit NOPXPL-A.
- Change the decimal character to your current DC parameter setting in the numeric fields, which contain a decimal character. Stow NOPXPL-A.

You will now be able to use NOPXPL-A with your own decimal character.

# Restrictions

1. ON ERROR routines **must not** be coded in any Entire Operations user routine. Error handling is performed by a global Monitor error routine. Monitor failures are possible if this is not adhered to.
2. No programs with their own GDA may be invoked.
3. The names of user routines may not begin with the letter **V**, particularly if they are to be stored in the library SYSEOR, because the prefix **V** is reserved for the internal Entire Operations exit directory.
4. The following Natural statements **may not be coded** in any user routine invoked by Entire Operations:
   - STOP
   - TERMINATE
   - FETCH without RETURN (FETCH RETURN is allowed)

**Note:**
If you want to use the values of the special parameters in macro-JCL, you must first read them with the special statement #GET-SYMBOL.

 Copyright © Software AG 2003

# Natural Programs

In Entire Operations, Natural programs can be defined as NAT-type jobs within job networks. They have no JCL and are executed directly by the Entire Operations Monitor. Like all jobs, NAT-type jobs are defined using the Entire Operations Network and Job Maintenance facility (Network and Job Maintenance option on the Main Menu).

You can maintain NAT-type jobs like any other job, that is, they can be associated with input and output conditions, resources, etc. (see the section Job Maintenance).

# Routines to Set Input Conditions

Before Entire Operations can submit a job, all its input conditions must be fulfilled.

If a user routine is defined for the condition, Entire Operations invokes the defined routine when checking condition status. After execution, the routine returns a code which is compared with the condition code defined as desired value for the input condition. The condition is automatically set if the codes match. If the codes do not match, you find a user-defined text on the Active Jobs screen. You can define the text with the P-RT parameter.

For an example of a user routine to set an input condition, see the subsection Input Condition Maintenance in the section Job Maintenance.

 Copyright © Software AG 2003

# Routines for End-Of-Job Checking and Actions

You can define user routines as part of end-of-job checking. Entire Operations bases its end-of-job checking on the occurrence of defined events during job execution. You can define a user routine as an event check. Entire Operations automatically executes the user routine when the job terminates.

Typically, such a routine can check the result of a job, for example. The user routine returns a code which determines the event status. A return code zero means Check OK, any other return code means Check not OK. Condition codes returned by user routines can determine end-of-job status.

End-of-job action routines can be used to perform any actions after job termination.

End-of-job checking and action routines are supplied with both the job number and the name of the sysout file in which Entire Operations collected the job sysout (BS2000/OSD only).

For an example of a user routine triggered in end-of-job checking, see the section End-Of-Job Checking and Actions.

# Accessing Entire Operations from other Applications

This subsection covers the following topic:

- API - Application Programming Interface

---

## API - Application Programming Interface

The Entire Operations library contains some routines that can be invoked from any other Natural application to provide access to Entire Operations internal data. These routines are called the Application Programming Interface and can be invoked simply with a Natural CALLNAT statement.

The Application Programming Interface provides the following features:

- Dynamic connection to the Entire Operations data file;
- Access to conditions;
- Access to symbols;
- Writing to the Entire Operations log.

The Application Programming Interface can be used for a number of purposes within and outside Entire Operations. Among them are:

- Dynamic modification of symbol tables during the execution of a job network;
- Modification of conditions from Natural programs;
- Exchanging information between Entire Operations and any other online or batch application;
- Setting input conditions for job networks from online applications;
- Inquiring the status of job networks from applications;
- Setting Entire Operations symbols from external tables;
- Inquiring Entire Operations symbols for use in external applications.

For more details, see the section API Routines.

 Copyright © Software AG 2003

# Submission of Jobs by Entire Operations

Jobs defined and scheduled in Entire Operations are submitted automatically under the control of the Entire Operations Monitor. During the submission process, the submitted JCL can be handled in any of the following ways:

- Completion or modification of the job card(s) according to the Entire Operations defaults;
- Checking of all submitted JCL by a global user exit (to be defined in the Entire Operations defaults);
- Insertion of header information as comments into the submitted JCL. This is always performed. The header information can be viewed in the job sysout and resembles the following:

```
Job SNNOPEX (1355) Type SM File 2------------------------------ Columns 001 072
====>                                                            SCROLL===> CSR
***** ****************************** top of data ******************************
00001         1 //NOPE01J1 JOB ,SN,CLASS=G,MSGCLASS=X,MSGLEVEL=(1,1),
00002           // TYPRUN=SCAN
00003           *** $ACFJ219 ACF2 ACTIVE DAEF
00004           *** ====================================================
00005           ***                S O F T W A R E   A G
00006           ***          E N T I R E   O P E R A T I O N S
00007           ***
00008           *** Owner:    SN         Run:           328
00009           *** Network:  SN-2       Symbol Table:  EXAM-ST1
00010           *** Job:      CHECK-TIME Escape Act:    § Sub: $
00011           ***                      Submit Userid: SN
00012           ***
00013           *** 04.09.92 15:15 activated        by SN
00014           *** 04.09.92 15:15 created/modified by SN
00015           *** 04.09.92 15:15 submitted
00016           *** ====================================================
00017           *** Symbols replaced at Activation Time:
00018           ***
Enter-PF1---PF2---PF3---PF4---PF5---PF6---PF7---PF8---PF9---PF10--PF11--PF12---
      Help        End   Quit  Rfind       Up    Down        Left  Right Curso
```

**Note:**
In BS2000/OSD, the LOGON card is checked. If nothing else was specified at job definition, the LOGON parameters, account-number, job-class, monitoring job variable (with password, if specified) are taken from here. Job priority, run priority and CPU time limit can also be given via LOGON card.

- Insertion of information about all replaced symbols and their current values, if any symbols were replaced. For example:

```
Job SNNOPEX (1355) Type SM File 2----------------------------- Columns 001 072
====>                                                          SCROLL===> CSR
00015           *** 04.09.91 15:15 submitted
00016           *** ====================================================
00017           *** Symbols replaced at Activation Time:
00018           ***
00019           *** Symbol  : UID
00020           ***   Owner : SN  Symbol Table: EXAM-ST1
00021           ***   Modif.: SN  at 91-02-05 12:31
00022           ***   Value : SN
00023           *** Symbol  : CLASS
00024           ***   Owner : SN  Symbol Table: EXAM-ST1
00025           ***   Modif.: SN  at 91-02-05 12:32
00026           ***   Value : G
00027           *** Symbol  : MSGCLASS
00028           ***   Owner : SN  Symbol Table: EXAM-ST1
00029           ***   Modif.: SN  at 91-02-05 12:32
00030           ***   Value : X
00031           *** Symbol  : P-EXECUTION-NODE
00032           ***   Value : 146
00033           *** Symbol  : JOBLIB
Enter-PF1---PF2---PF3---PF4---PF5---PF6---PF7---PF8---PF9---PF10--PF11--PF12---
      Help        End   Quit  Rfind       Up    Down        Left  Right Curso
```

- Replacement of symbols in the JCL with their current values at submission time.
- **For OS/390 only:**
  If a submission time symbol replacement error occurs, a **JCL error** will be forced to prevent from an execution of the job.
  Lines similar to the following will force a JCL error:

  ```
  // ###### Entire Operations Symbol Replacement Error ######
  ```

  The job will remain in an error status such as follows:

  ```
  JobId 51058 - Symbol Replacement Error
  ```

  End-of-job processing will not be reached, because this is treated as a submission error.

 Copyright © Software AG 2003

# Job Execution as a Dummy Job

The execution of a dummy job means that the job is running without job control and without its own action within Entire Operations. Dummy jobs can have an **expected run time**, which they will be waiting in the system. Dummy jobs will **always** terminate with the state **o.k**.

This subsection covers the following topics:

- Permanent Dummy Jobs
- Temporary Dummy Jobs
- Influence on the End-Of-Job Actions
- Supervision of Running Jobs

---

## Permanent Dummy Jobs

Permanent dummy jobs are declared as a dummy in the **master job definition** already (see Adding or Modifying a Job Definition in the section Job Maintenance). To do this, the job type DUM is used.

## Temporary Dummy Jobs

Temporary dummy jobs have a **master JCL definition** (see Defining a JCL for a Job in the section Job Maintenance). They are executed as a dummy for a particular run. During its activation, a job can be put into the state 'temporary dummy job' for the following reasons:

| **Dummy because of** | **Description** |
|---|---|
| Definition | With an identifier in the **master job definition** (see Adding or Modifying a Job Definition in the section Job Maintenance), the JCL definition can be maintained, but the execution as dummy job can be forced. |
| Schedule | Depending upon the schedule of the network or upon a calendar, a job can be submitted as a temporary dummy job on particular days.<br>For further details, see Defining Schedule Dependency for a Job in the section Job Maintenance. |
| Prerequisite | It can be defined that the existence or non-existence of an active prerequisite results in execution as a temporary dummy job.<br>For further details, see Possible References for Conditions in the section Job Maintenance. |
| Recovery Action | If a job is not to be submitted again in case of a defined recovery action.<br>For further details, see Defining Recovery Action in the section End-Of-Job Checking and Actions. |
| JCL check | Execution of the job control in the mode 'JCL Check'.<br>Thus, **jobs** (see Field Descriptions: Job Activation) or **Job Networks** (see Field Descriptions: Network Activation) are activated for the JCL check. |
| Empty JCL | If the loading process of the job control reveals that the JCL is empty, then the job will be submitted as a temporary dummy job.<br>This state can result from the JCL generation by means of macro instructions, for instance. |
| Multiple Suffixes | If the activation is to take place by means of multiple suffixes: if the multiple symbol used does not contain any occurrences, then a dummy job will be activated as a placeholder in the network during activation. |

# Influence on the End-Of-Job Actions

For temporary dummy jobs, the end-of-job actions are partially carried out otherwise, as if the jobs would run in normal mode. For a detailed description, see End-Of-Job Actions with Execution as a Temporary Dummy Job.

# Supervision of Running Jobs

Running jobs are checked as to whether they have exceeded their predefined deadline time.

If this is the case, a message:

- is sent to all mailboxes linked to the network;
- is sent to Con-nect (if linked);
- is written to the log;
- also appears on the Active Jobs screen.

 Copyright © Software AG 2003

# Logging Facility

The Entire Operations Logging facility records every event and user action during job network processing. This information is available online. From the system log, you can select more detailed logs for individual jobs if logging at job level is specified at job definition time.

The **default system log** displays information about activities in the system as a whole such as user actions, date and time of events and messages about events. If more information is available for any item on the system log, it is preceded by an asterisk (*). Log information at the job level can be any of the following:

- **JCL log**
  Displays the JCL of a specific job run;
- **Sysout log**
  Displays the sysout of a specific job run;
- **System message log**
  Displays all operating system messages about jobs. The system log displays the first of these messages. You can select a job from the system log to display all system messages for that job.

A selection window in the Logging facility asks you to select the default log according to owner, network, job and run number.

For more information, see the section Log Information.

# Error Messages

This subsection covers the following topics:

- Where Error Messages Are Written to
- Language of the Error Messages

## Where Error Messages Are Written to

Entire Operations displays error messages at the following locations:

| Location | Description |
|---|---|
| On the current screen | If Entire Operations is used online.<br>In many cases, additional error information is written to the "Entire Operations log".<br>Subsequent to more complex errors it is recommended to have a look there. For more information, see Log Information. |
| List of the active jobs, Message column | Contains the last status message or error message for the active job. |
| Entire Operations Log | Contains all status messages and error messages.<br>If database problems prevent you from writing to the log file, then the messages will be written to the sysout of the monitor tasks. |
| Monitor tasks sysout | Contains mainly start and end messages of the monitor tasks.<br>In this case, some other important events are also logged in addition. |
| Console | On mainframes, weighty messages of the monitor tasks are written to the System console.<br>In most cases, they are to be answered by the operator.<br>An example of this is the non-availability of the database, while the Entire Operations monitor is running. |

## Language of the Error Messages

In Entire Operations, the languages English and German are available.

 Copyright © Software AG 2003

| Location | Description |
|---|---|
| On the current screen | The language which is defined in the user profile (see the subsection Entire Operations Defaults in the section System Administrator Services of the Entire Operations Administration Documentation). |
| List of the active jobs, Message column) | The language which is defined in the user profile (see the subsection Entire Operations Defaults in the section System Administrator Services of the Entire Operations Administration Documentation). |
| Entire Operations Log | The language which is defined in the user profile (see the subsection Entire Operations Defaults in the section System Administrator Services of the Entire Operations Administration Documentation).<br>Log messages are saved independent of the language. Each user can have them displayed in his or her own language. |
| Monitor tasks sysout | Depends upon the Natural environment language of the Entire Operations monitor. This language can be set using the Natural parameter ULANG for instance. |
| Console | Depends upon the Natural environment language of the Entire Operations monitor. This language can be set using the Natural parameter ULANG. |

# Reporting Facility

The Reporting facility provided by Entire Operations is designed to help you define entities, monitor the system and plan workloads.

The following reports are available:

- **Log - Terminated Jobs**
  Lists all jobs which terminated within a given date range;
- **Log - Abended Jobs**
  Lists all jobs within a given date range which terminated Not OK;
- **Log - Jobs not Started**
  Lists all jobs within a selected time range which were not started. These are jobs, for example, which exceeded their latest start time or which were waiting for input conditions.
- **Accounting Data**
  Provides information on job elapsed times and CPU times of previous network executions;
- **Network Description (short)**
  Displays the components of the specified job network, including input conditions, schedules and end-of-job checking and actions;
- **Network Description (detailed)**
  Displays the same information as the short network description, but includes a text description of the network (see the following subsection);
- **Network Job Flow Display**
  Provides short overview of job flow within a network.
  Output can be sent to a designated printer;
- **Jobs Schedule**
  Displays schedule of all jobs for a specified date range;
- **Network Activation Summary**
  Produces a status report of all network activations for a given day.
- **Network Schedule Overview**
  Provides an overview of all scheduled network activations.

See the section Reporting for further details.

 Copyright © Software AG 2003

# Editor

Entire Operations provides a version of the Software AG Editor especially adapted to the Entire Operations environment.

You can use the Entire Operations Editor to perform the following:

- Create or edit JCL for jobs.
  Existing JCL can be edited, even if it was written outside of Entire Operations using other editors;
- Create or edit JCL for jobs of type MAC (macro).
- Write Natural programs to run as jobs in job networks or be executed as user routines;
- Write and browse text descriptions at the network, job, and event level (online documentation);
- Display JCL, job sysout and listings in browse mode (no editing possible);
- Display the Entire Operations system log.

The Editor is described in detail in the **Software AG Editor Documentation**.

# Cleanup of the Active Database

This subsection covers the following topics:

- Cleaning up the Active Database
- Deleting Work Files

---

## Cleaning up the Active Database

The operative data of Entire Operations must be removed again from the active database after a certain time. Part of this process is the removal of work files as well, which Entire Operations has created in the file system for job control purposes.

- The **retention periods** for active objects can be defined (see Entire Operations Administration Documentation).
- The cleanup may be defined to be carried out **automatically** every day. If no **time** is defined for the cleanup, then it will be started at 00:00. A **time** for the daily cleanup start can be defined. For a more detailed description, see Entire Operations Administration Documentation.
- The cleanup of the active database can also be started **manually** any time (see Entire Operations Administration Documentation).
- Furthermore, it is possible to run the cleanup of the active database in a **Natural batch job** (see Cleanup in Batch Mode) exterior to the Entire Operations monitor. The cleanup in batch mode can be executed with the monitor running or shut down.

Please note that the cleanup of the active database depending upon the data quantity to be processed affects the system. It is recommended to schedule the cleanup for **silent** times.

Cleanup runs can also be performed several times a day. This makes it possible to reduce the volumes to be processed per run.

## Deleting Work Files

Entire Operations creates files in the operating system under BS2000/OSD, UNIX and Windows. Among other things, they contain the job sysout or the JCL to be executed.

During the deactivation of active jobs, which have run in one of these operating systems, the assigned work files are deleted as well.

For BS2000/OSD, the names of these work files might also have been generated with a name exit, which is used for work file deletion, too.

All definitions are created in the Entire Operations Defaults. They are described in the Entire Operations Administration Documentation.

 Copyright © Software AG 2003

# Hints on Entire Operations Performance

Some performance aspects of Entire Operations are dealt with in more detail in the section Performance Considerations in the Entire Operations Installation and Operations Documentation.

# Job Control for Jobs under BS2000/OSD

This subsection covers the following topics:

- Naming Conventions for Work Files
- User Exit

---

## Naming Conventions for Work Files

The name generation for work files under BS2000/OSD is described in the subsection Naming Conventions for Work Files Created by Entire Operations, BS2000/OSD of the Entire Operations Installation and Operations Documentation.

## User Exit

Names of BS2000/OSD work files can also be generated via an exit (see the subsection Generating Sysout File Names for BS2000/OSD in the section API Routines).

 Copyright © Software AG 2003

# Job Control for Jobs under UNIX

This subsection covers the following topic:

- Entire Operations Work Directory

## Entire Operations Work Directory

The environment variable $EOR_WORK of NPR/UNIX contains the name of the Entire Operations work directory. Within this directory, the work files are hierarchically stored.

The name generation for work files under BS2000/OSD is described in the subsection Naming Conventions for Work Files Created by Entire Operations, UNIX of the Entire Operations Installation and Operations Documentation.

# Job Control for Jobs under Windows

This subsection covers the following topics:


- Job Control Characteristics under Windows
- Windows Version Required
- Components Required
- Integration in Entire Operations
- Executing Operating System Functions
- Windows File Systems
- File Names
- Sysout Redirection
- Entire Operations Work Directory
- Environment Variables
- Job Control
- Job Start and Job Control
- End-of-Job Check
- End-of-Job Actions
- Software AG Editor


---

## Job Control Characteristics under Windows

The job control system Entire Operations also runs in a Windows environment, with the following characteristics:

- Operating system neutral modelling of job networks.
- Entire Operations' functionality and flexibility is now also transparently available on Windows.
- Support of DOS batch files and executables (EXE).
- It is not necessary to directly enter Windows DOS commands.
- Can also run in mixed mainframe/Windows/UNIX environments.
- Job control on several Windows machines at the same time.

## Windows Version Required

Entire Operations supports Windows versions starting from Windows NT Version 4.0 or higher.
For Windows NT 4.0, you are recommended to install Service Pack 3 at least.

Windows is supported in all language versions.

## Components Required

- Entire Operations Monitor
  The Monitor can run under the operating systems BS2000/OSD, OS/390, VSE/ESA, or UNIX, concurrently controlling jobs executed under BS2000/OSD, OS/390, VSE/ESA and UNIX.
- Entire System Server
  For accessing mainframe, UNIX or Windows operating systems.
- Entire Net-work/Entire Broker
  The transport layer.
- Entire System Server/Windows
  For accessing the Windows operating system. On every machine to be controlled, an Entire System

 Copyright © Software AG 2003

Server/Windows server has to be installed. This is installed as a Windows service and is administrated with the Windows services administration.

# Integration in Entire Operations

All Entire Operations concepts from mainframe environments are also available under Windows.

Analogously to mainframe NPR nodes, the Windows operating system servers are addressed via a node number which is used in addition to the node name (for example, the TCP/IP name) as a short name within Entire Operations (just as under UNIX).

# Executing Operating System Functions

For executing operating system functions, there is a server of type NPR/Windows on each Windows node. This server runs as a background Windows process.

The Entire Operations Monitor and the Entire Operations online application use the following components for server communication:

- The SAT (System Automation Tools) communication layer
- The Entire Broker for transmitting client/server requests
- Entire Net-work as the transport layer
- Up to 740 Windows nodes can be served concurrently

# Windows File Systems

All common Windows file systems are supported: FAT, VFAT, NTFS.

# File Names

As there is no backslash ( \ ) available on Mainframes, Windows file names can be written with slash ( / ) as an alternative as well, if the character sequence +F+ directly precedes the file name. This applies to file names within JCL as well.

## Example

| | |
|---|---|
| **Original Windows** | c:\jcl\script1.bat |
| **Alternative representation** | +F+c:/jcl/script1.bat |

# Sysout Redirection

From the Entire Operations Monitor, all jobs are started which redirect their output to a file. The Sysout files are stored in the Entire Operations work directory. If the job is repeated, the old sysout file is renamed.

# Entire Operations Work Directory

The Entire System Server/Windows environment variable %EOR_WORK% contains the name of the Entire Operations work directory. Within this directory, the work files are stored hierarchically.

The name generation for work files under BS2000/OSD is described in the subsection Naming Conventions for Work Files Created by Entire Operations, Windows of the Entire Operations Installation and Operations Documentation.

The name of the work directory for an active network is available in the predefined symbol P-NADIR. You may store application-specific work files there, provided there are no naming conflicts with files created by Entire Operations.

Work files created by Entire Operations or by the application are deleted by the Entire Operations Monitor on network or job deactivation.

# Environment Variables

You can use Windows environment variables freely within file names. This corresponds to the behaviour of BAT files. You can combine environment variables and variables from symbol tables.

# Job Control

The Windows Job Control can be stored in any place. Among other places, it can be stored in Natural text members or in mainframe files. Symbol replacement and JCL generation (job type MAC) are available.

# Job Start and Job Control

The Entire Operations Monitor starts jobs based on conditions and on time. Accounting data is retrieved and stored. You can manually cancel the job from the online environment.

# End-of-Job Check

Entire Operations adds some ’echo’ commands to the Windows job control. This allows to control certain messages in the sysout:

- Starting and ending message with timestamp
- Elapsed job time

These messages are used to check whether a job did run completely. Additionally, accounting information is retrieved. For checking the job, strings can be searched for in sysout and end-of-job check routines can be used.

# End-of-Job Actions

You can send messages (for example by e-mail) to other users from the Windows node. In the Windows node definition, a program for sending mail can be defined. It is required that this program can be started from the DOS command prompt. One example for such a program is the shareware "wsendmail". All other forms of news broadcasting, such as the Entire Operations Mailbox, can still be used.

You can define printing of files and of sysout lists as an end-of-job action. For each Windows node, a Windows print command with a variable for the file name can be defined. User routines can help start further actions.

# Software AG Editor

As for other platforms, the job control can be edited with the Software AG Editor on the Windows platform. Before writing the file back, the editor creates a backup copy of the edited file.

 Copyright © Software AG 2003

The editor is also used for displaying job sysout. The editor commands are the same as on the mainframe.

# SAP R/3 Batch Support on UNIX and Windows

This subsection covers the following topics:

- Overview
- Client/Server Infrastructure
- Script Language for SAP R/3 Jobs
- Installation Notes

---

## Overview

Entire Operations supports SAP R/3 batch processing and provides a script language to define SAP R/3 jobs in text files.

- The Entire Operations runtime system may reside on a mainframe or on a UNIX system.
- The communication to an SAP R/3 system requires Entire System Server (UNIX or Windows) Version 2.1.1 or higher to be installed.
  The SAP R/3 system must be reachable from the Entire System Server node via TCP/IP.
- SAP R/3 version3.1h is the lowest version to be supported.
  It does not matter whether the SAP R/3 system resides on UNIX or Windows.

## Client/Server Infrastructure

- RFC Connections
- R/3 RFC Session Handling
- Job Type R3
- Script Language for SAP R/3
- Scheduling
- SAP R/3 Job Submission
- Online Logon to SAP R/3

To interface R/3's CCMS Background Processing System, SAP provides the XBP (Background processing) API. This is called via SAP's RFCs (Remote Function Calls) from external programs. The RFC transport protocol is TCP/IP based and is supported for C/C++/Visual Basic. It is available on several UNIX systems and Windows (which are the current SAP R/3 platforms).

The Entire System Server offers Entire Operations the necessary information to do job scheduling on Windows and UNIX.

The SAP R/3 support is integrated in Entire System Server (UNIX and Windows).

### RFC Connections

To use the RFC API, an RFC connection will be established.

Using the destination entry configured by a file ("sideinfo" or "saprfc.ini"), it is possible to select a special R/3 system (system number) on a special host.

 Copyright © Software AG 2003

The relation between Entire System Server (UNIX and Windows) nodes and R/3 destinations is1:N. So from one Entire System Server (UNIX and Windows) node, several R/3 systems can be reached.

When a R/3 session is opened, a client, a user, a password and an optional language will be defined.

This means that Entire System Server (UNIX and Windows) has to establish several RFC connections for different users or same users with different client parameters.

## R/3 RFC Session Handling

- An R/3 RFC session will be opened implicitly by Entire System Server (UNIX and Windows) at the first call to any R/3 object.
- When the Entire Operations monitor performs a regular shutdown, or if a Entire Operations online user ends his Entire Operations session, it invokes the Entire System Server (UNIX and Windows) function USER | LOGOUT (with a special flag, if required) to terminate all current R/3 sessions opened by it.

## Job Type R3

The job type "R3" is to be used to define SAP R/3 batch processing jobs.

The execution node of such a job is the Entire System Server (UNIX or Windows) node, from which the SAP R/3 system is accessed.

## Script Language for SAP R/3

Entire Operations's R/3 Job Script will be capable to support R/3 job definitions as they are: as mixed sequence of R/3's internal and external job steps.

R/3 Job Scripts can be stored in all locations which can contain plain text files.

On UNIX and Windows systems, the JCL location TXT can be used.

See Script Language for SAP R/3 Jobs for details.

## Scheduling

Scheduling functions of R/3 XBP are not used. Instead, the common operating system independent scheduling functionality of Entire Operations is used.

Jobs will be submitted (released in SAP R/3) with the start criterion "immediate" only.

## SAP R/3 Job Submission

The R/3 job submission consists of the following steps:

1. The Active JCL (script language) is interpreted, with error checking.
2. The R/3 job definition APIs are invoked.
3. They are submitted into the R/3 runtime system.

## Online Logon to SAP R/3

Entire Operations provides the direct command "LOGON R3 ..." for an online logon to an SAP R/3 system.

The logon screen is described in the subsection SAP R/3 System in the section Logging on to Entire Operations.

# Script Language for SAP R/3 Jobs

- Advantages
- Features
- R/3 Script Language: Syntax Definition
- Script Language Examples
- Installation Notes

## Advantages

By introducing a new R/3 Batch Script language, it is possible to completely define R/3 jobs in exactly one text member. The scripts can be added in a normal text editor and general text processing routines can run over these job definitions, without defining special user interfaces to rebuild R/3 dialogs.

## Features

- The script language has an operating system independent (mainframe compatible) format.
- It will be interpreted on Entire System Server (UNIX and Windows).
- It supports the complete parameter set for the XBP job step functions SXMI_XBP_JOB_ADD_ABAP_STEP and SXMI_XBP_JOB_ADD_EXTPGM_STEP.

## R/3 Script Language: Syntax Definition

- Grammar
- Phrasal Grammar
- Lexical Grammar

The syntax is defined as follows:

| Value | Description |
|---|---|
| terminal | Courier text indicates a word or character that must appear exactly as shown. Ambiguous terminal characters are enclosed in single quotes (’’). |
| Nonterminal | Italics indicate a word that is defined further. |
| [] | Brackets indicate that the enclosed item is optional. |
| {choose\|one} | Forked arrows / a group of words, separated by vertical bars (\|) and grouped with curly brackets, indicates an either/or choice. |
| []* | An asterisk (*) indicates that the preceding item(s), which is enclosed in square brackets, can be repeated zero or more times. |
| []+ | A plus sign (+) indicates that the preceding item(s), which is enclosed in square brackets, can be repeated one or more times. |

### Grammar

The grammar is divided into two parts: the phrasal and lexical grammars.

In the phrasal grammar, whitespace is insignificant. Space, tab, return, and linefeed characters are considered whitespace. Comments are considered whitespace. Comments consist of the characters between /* and */ (not nested), and between // and a return or linefeed character.

 Copyright © Software AG 2003

## Phrasal Grammar

script:

```
step-definition*
```

step-definition:

```
{ abap-step-definition | external-program-definition }
```

abap-step-definition:

```
{abap[-step]}: expression
```

external-program-definition:

```
{external[-program][-step]}: expression
```

expression:

```
{ parameter-expression | compound-expression }
```

parameter-expression:

```
{ symbol = string | symbol = compound-expression }
```

compound-expression:

```
( expression-sequence ) | begin expression-sequence end
```

expression-sequence:

```
expression [ expression ]+
```

## Lexical Grammar

string:

```
{ " character-sequence " }
```

character-sequence:

```
{ string-character | escape-sequence }*
```

string-character:

```
< any displayable ASCII char from 32 to 127, including tab character, without " >
```

escape-sequence:

```
""
```

word:

```
'_'* alpha+ { alpha | digit | '_' }+
```

alpha:

```
{ 'a' | .. | 'z' | 'A' | .. | 'Z'}
```

digit:

```
{ '0' | ..| '9' }
```

## Script Language Examples

- Example 1
- Example 2

### Example 1

```
/*

 *R/3 Job Script Example
 *

 */

// step (1) - calls abap program SALARY

abap: program = "SALARY"

// step (2) - calls abap program SALARY with SPECIAL variant

abap: begin

  program = "SALARY"

  variant = "SPECIAL"

  sap_user_name = "HARRY"

end

// step (3) - create tapes

external: begin

  program="/usr/bin/archive.sh" parameter="/dev/rmt0"

end

// end script
```

 Copyright © Software AG 2003

### Example 2

```
/*
 * R/3 Script EXAMPLE
 *
 * YOU ARE FREE TO WRITE keywords and symbols UPPER or lower case
 * and in one line if you like
 */

ABAP: program = "SALARY" ABAP: ( PROGRAM="SALARY" VARIANT="SPECIAL" )

EXTERNAL-STEP  :

(  /* but take care external programs and parameters may be
    * case sensitive
    */

  program = "/usr/bin/archive.sh" parameter = "/dev/rmt0"

)
```

# Installation Notes

If not otherwise specified, these notes apply to UNIX and Windows.

- Entire System Server (UNIX and Windows), version 2.1.1 and above, is delivered with executables with or without SAP R/3 support.
  Make sure that the module with SAP R/3 support is used.
  For UNIX, this is "npretbr3" with "libnprr3.so".
  For Windows, this is "npretbr3.exe"with "libnprr3.dll".
- The environment variable RFC_INI must contain the full path name to the "saprfc.ini" file.
- The SAP R/3 library "librfc.so" (UNIX) or "librfc.dll" (Windows) must be callable by the Entire System Server (UNIX and Windows).

# Using Logical Conditions

This subsection covers the following topics:

- Shaping a Job Network
- Integrating Manual Actions
- Handling Job Failure
- Combining Input Conditions
- Not Executing Jobs in Selected Runs

## Shaping a Job Network

Using the job network, job and conditions maintenance facilities, Entire Operations allows you to define job networks that can reflect any set of circumstances or requirements of your batch job processing environment.

For example, logical conditions can be used to link jobs sequentially within a network, as illustrated below:

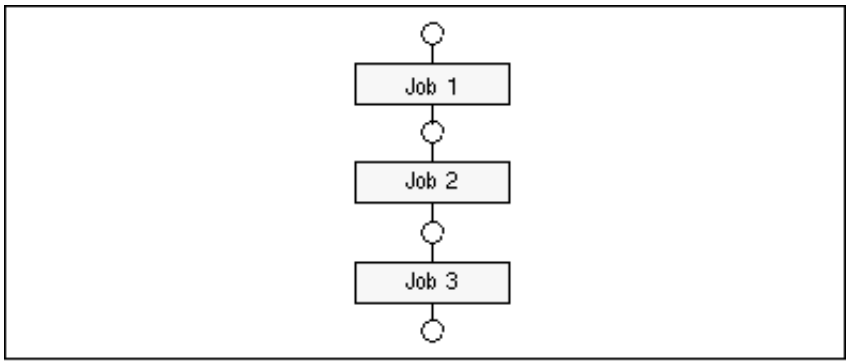


Logical conditions can also be used to allow parallel processing of jobs, as illustrated by the following figure:

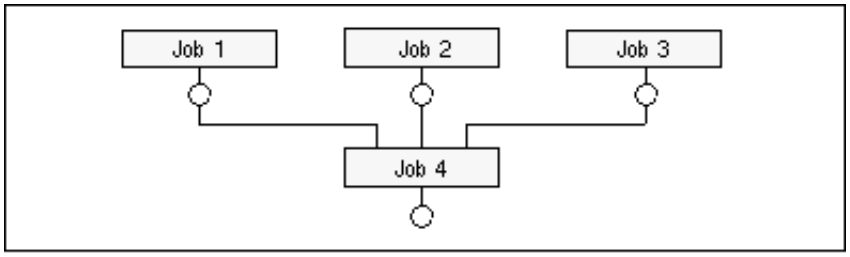


Parallel processing of jobs does not mean that the jobs **must** be executed at the same time. It only means that they are not interdependent and therefore **can** run at the same time.

The occurrence of bottlenecks when parallel jobs compete for system resources can be avoided through the use of resources.

## Integrating Manual Actions

Logical conditions can also be defined for manual actions (for example: loading a tape). You can assign a mailbox name to a condition (for example: Tape loaded OK) (see the subsection Mailboxes in this section). A user associated with the same mailbox is notified if this condition is pending, that is, if the tape is not loaded. The user can then load the tape and manually set the condition to allow Entire Operations to proceed to the next job.

 Copyright © Software AG 2003

The following figure illustrates this example of manual processing within a job network:

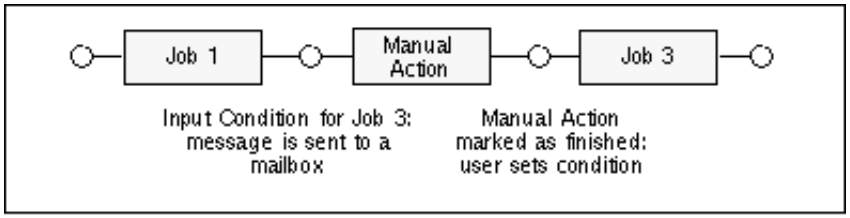


# Handling Job Failure

As mentioned above, you can define several output conditions for a job. Output conditions are set by defined events occurring during job processing and determine how Entire Operations is to proceed after job termination. A job can thus have different subsequent jobs, depending on end-of-job status.

A possible usage of output conditions is to define two possible paths, one selected by a Job OK output condition, the other by a Job not OK output condition. This allows you to define jobs which are only started if a defined error occurs during job processing.

The following figure illustrates this usage of output conditions:

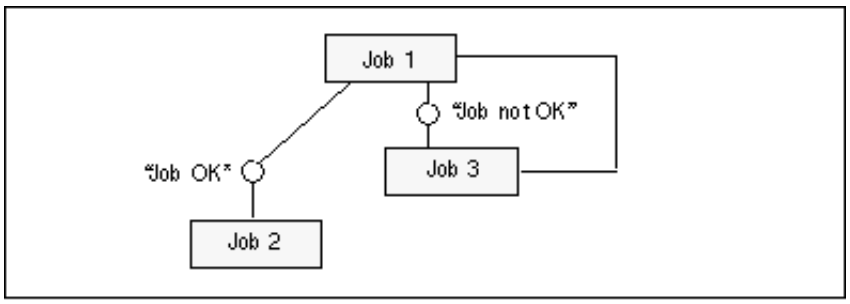


The output condition Job not OK is defined as input condition for Job 3. After Job 3 is finished, Job 1 can be rescheduled.

**Note:**
See also the subsection Defining Recovery Action in the section End-Of-Job Checking and Actions.

# Combining Input Conditions

- Example: A or B is TRUE
- Example: Complex Combinations

By default, Entire Operations assumes that all input conditions for a job must be TRUE before it can be submitted. For example, assuming input conditions A, B, C and D are defined for a job, Entire Operations does not submit the job until the Boolean expression A AND B AND C AND D applies.

## Example: A or B is TRUE

However, it is possible to define other logical combinations. For example, if a job is to be submitted if condition A OR B is TRUE, you can define a condition C to be set when either condition A or B is TRUE.

The following figure illustrates this combination:

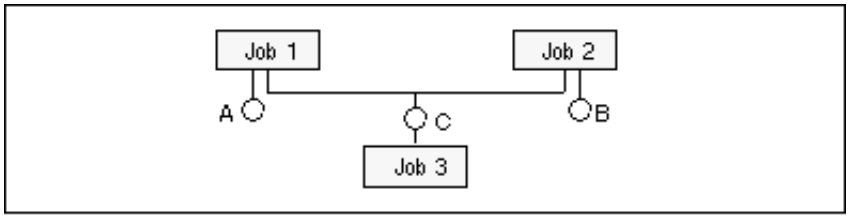


Condition C is defined as input condition for Job 3 and is set:

- by Job 1 when condition A is TRUE, or
- by Job 2 when condition B is TRUE.

## Example: Complex Combinations

More complex combinations are also possible. For example, assuming the following Boolean expression must apply to submit a job: (A AND B) OR (C AND D), you can define an input condition E for the job which is set when:

- Conditions **A** and **B** are both TRUE, or:
- Conditions **C** and **D** are both TRUE.

The following figure illustrates this combination of input conditions:

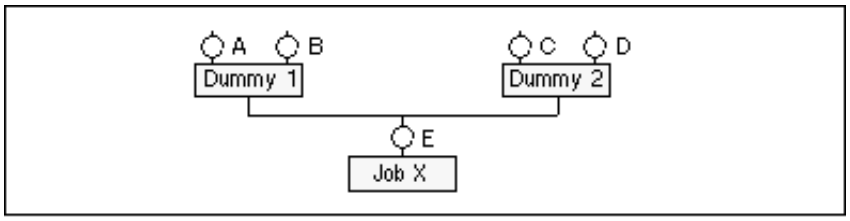


You must define 2 dummy jobs which serve to 'collect' input conditions. Dummy jobs are not submitted to the operating system. They merely wait until conditions **A** and **B** or **C** and **D** are TRUE, and their execution consists only of setting output condition **E** as input condition for Job **X**.

In this way, Entire Operations allows any combination of input conditions.

# Not Executing Jobs in Selected Runs

Entire Operations has the concept of **temporary dummy jobs**. For selected runs and without altering the network structure, a job that is 'real' can be changed into a dummy job that is not started in the operating system.

A job can be changed into a dummy job in the following ways:

1. Schedule dependency (see the subsection Defining Schedule Dependency for a Job in the section Job Maintenance).
2. DUM reference in an input condition. This can be dependent on a symbol value or on the existence of a file (see the subsection Field Descriptions: Master Input Condition Addition / Modification in the section Job Maintenance).

 Copyright © Software AG 2003

# Logging on to Entire Operations

This section tells you how to start an Entire Operations session. It introduces you to the Entire Operations Main Menu, explains the layout of the system screens and the functions they provide, and describes the online help facility.

This section covers the following topics:

- Entire Operations Logon Screen
- Logging on to an Operating System Server Node
- Entire Operations Main Menu
- Entire Operations Screens
- Online Technical Information
- Online Help Facility

# Entire Operations Logon Screen

The startup procedure of Entire Operations is defined specifically for your installation: ask your System administrator.

Having started Entire Operations, the Entire Operations Logon screen appears:

```
 20/11/01                                                                10:05:33
==============================================================================
                EEEEEEEE   NNN   NN   TTTTTTTT  II   RRRRRRRR   EEEEEEEE
               EE         NNNN  NN      TT     II   RR    RR   EE
              EE         NN NN NN      TT     II   RR    RR   EE
             EEEEEE     NN  NNNN      TT     II   RRRRRRRR   EEEEEE
            EE         NN   NNN      TT     II   RR  RR     EE
           EEEEEEEE   NN    NN      TT     II   RR    RR   EEEEEEEE


      OOOOOO  PPPPPP  EEEEEE  RRRRRR  AAAAAA TTTTTTT II  OOOOOO  NN   NN  SSSSS
     OO  OO  PP  PP  EE      RR  RR  AA  AA    TT   II  OO  OO  NNN  NN  SS
    OO  OO  PP  PP  EE      RR  RR  AA  AA    TT   II  OO  OO  NN N NN  SS
   OO  OO  PPPPPP  EEEEE   RRRRRR  AAAAAA    TT   II  OO  OO  NN  NNN  SSSSSS
  OO  OO  PP      EE      RR RR   AA  AA    TT   II  OO  OO  NN   NN      SS
 OOOOOO  PP      EEEEEE  RR  RR  AA  AA    TT   II  OOOOOO  NN   NN  SSSSSS
==============================================================================

    Userid ===> GHH_____
  Password ===>

Enter-PF1---PF2---PF3---PF4---PF5---PF6---PF7---PF8---PF9---PF10--PF11--PF12---
      Help        End
```

**Note:**
If you are already logged on to Natural Security and your user ID is defined in Entire Operations, the above Logon screen is bypassed and you are presented with the Main Menu. However, display of the Logon screen can be forced by an appropriate setting in the Entire Operations defaults.
If you wish to work in Entire Operations with a different user ID, you must change the STACK statement in your startup procedure to reflect the desired user ID (for example, STACK=(LOGON SYSEOR;NATOP user ID). If in doubt, ask your system programmer.

The input fields on the Logon screen have the following meaning:

 Copyright © Software AG 2003

| Field | Description |
|---|---|
| Userid | By default, your TP environment user ID appears in this field. You can enter Entire Operations under a different user ID by overtyping the default value. Any user ID entered in this field must be defined to Entire Operations. In addition, the User ID entered here must belong to the same owner as the User ID which appears here by default. For more information on the concept owner, see the subsection Owner in this documentation and the subsection User Maintenance in the section System Administrator Services of the Entire Operations Administration Documentation. If the User ID of your TP environment is not defined in Entire Operations, you cannot work with the product. The message is displayed EOR0009: INIT USER is unknown to Entire Operations. |
| Password | Enter the password associated with the user ID you entered in the Userid field. The password is meaningful if security systems such as RACF or ACF2 are used.<br>To enter hexadecimal passwords (for OS/390 and BS2000/OSD):<br>H'xx xx xx xx or X'xx xx xx xx<br>where xx xx xx xx is a hexadecimal string. The maximum length is 16 characters, or 8 bytes. |

If necessary:

1. Correct your user ID.
2. Enter your Password.
3. Press Enter to display the Entire Operations Main Menu.

If you do not enter your password correctly, it is prompted again in a window:

```
 20/11/01                                                              10:06:53
==============================================================================
                EEEEEEEE   NNN   NN   TTTTTTTT  II   RRRRRRRR   EEEEEEEE
               EE         NNNN  NN      TT     II   RR    RR   EE
              EE         NN NN NN      TT     II   RR    RR   EE
             EEEEEE     NN  NNNN      TT     II   RRRRRRRR   EEEEEE
            EE         NN   NNN      TT     II   RR  RR     EE
           EEEEEEEE   NN    NN      TT     II   RR    RR   EEEEEEEE

                    +-------------------------------------+
      OOOOOO  PPPPP ! EOR0004 - Please enter Password     !OOOO  NN   NN  SSSSS
     OO  OO  PP  PP !                                     ! OO  NNN  NN  SS
    OO  OO  PP  PP  !         ENTIRE OPERATIONS           !OO  NN N NN  SS
   OO  OO  PPPPPP   !      ENTIRE SYSTEM SERVER Logon     !O  NN  NNN  SSSSSS
  OO  OO  PP      E !                                     !  NN   NN      SS
 OOOOOO  PP      EE !  Node     ===> 146 EOR NODE MVS/XA  ! NN   NN  SSSSSS
=================== !  Userid   ===> GHH_____             !====================
                    !  Password ===>                      !
    Userid ===> GHH !                                     !
  Password ===>     !  PF3 End                            !
                    +-------------------------------------+
Enter-PF1---PF2---PF3---PF4---PF5---PF6---PF7---PF8---PF9---PF10--PF11--PF12---
      Help        End
```

1. Enter your correct Password.
2. Press Enter to display the Entire Operations Main Menu.

# Logging on to an Operating System Server Node

This subsection covers the following topics:

- Logon Process
- Upper/Lower Case
- Input Field Defaults
- Nodes on Mainframes
- Nodes on UNIX
- Nodes on Windows
- SAP R/3 System

---

## Logon Process

**To log on to an operating system server on Mainframe, after you have logged on to Entire Operations**

1. Enter the direct command LOGON SERVER <node> in the command line.
2. Press Enter.
   - See Nodes on Mainframes for more information.
   - See Nodes on UNIX for a more detailed description.
   - See Nodes on Windows for further details.

## Upper/Lower Case

- In case of a logon to nodes on Mainframes, the input field entries are converted to upper case letters.
- For a logon to nodes on UNIX and Windows, the input field entries are not **not converted** and are used as is for the logon process. Therefore, make sure an exact spelling in upper/lower case.

## Input Field Defaults

The default user ID - and perhaps also the group or domain - for logging on to a node can be defined for any combination of Entire Operations users and nodes (see the Entire Operations Administration Documentation, section System Administrator Services, subsection User Definition). In this case, these values are displayed as defaults during the logon process.

They serve to simplify the logon process. If you want to logon with another User ID and / or group or domain, then these fields may simply be overwritten.

- Press PF3 to return to the Main Menu.

## Nodes on Mainframes

For nodes on Mainframes, the following window will appear:

 Copyright © Software AG 2003

```
20.11.01               *** Entire Operations 4.1.1 ***               13:41:39
 Owner REQUEST                     Main Menu                   User ID SN
 ------------------------------------------------------------------------------

      Main Menu

   1  Network and Job Maintenance
   2  Active Job Networks
   3  Calendar Maintenance
   4  Log Informati +-------------------------------------+
   5  Symbol Tables !                                     !
   6  System Admini !                                     !
   7  Reports       !           Entire Operations         !
   8  Import/Export !              Node Logon             !
   9  Help          !                                     !
                    !  Node     ===> 148 F-MC             !
                    !  OpSys    ===> MVS/ESA              !
                    !  User ID  ===> SN________________   !
                    !  Password ===>                      !
                    !                                     !
 Command => logon s !  PF3 End                            ! ___________
Enter-PF1---PF2---P +-------------------------------------+ PF10--PF11--PF12---
      Help        End                                           Owner Mail
```

1. Enter your correct Password.
2. Press Enter.

The Operating System Server Status screen appears:

```
 20.11.01               *** Entire Operations 4.1.1 ***               10:14:21
                    Operating System Server Status at 10:14
 ------------------------------------------------------------------------------
 Node Server Name      Op.Sys.   TD   Ver A L LogonUID Status   Checked   Usage
 146  XCEOR210         MVS/ESA                         not active 10:13       1
 148  F-MC             MVS/ESA        212 X X GHH      active     10:14       1









Enter-PF1---PF2---PF3---PF4---PF5---PF6---PF7---PF8---PF9---PF10--PF11--PF12---
      Help        End         Check
```

The status **active** signifies that you logged on successfully and can now access the node.

**Note:**
The default user ID for logging on to a node can be defined for any combination of user and node (see the Entire Operations Administration Documentation, section System Administrator Services, subsection User Definition).

3. Press PF3 to return to the Main Menu.

# Nodes on UNIX

For nodes on UNIX, the following window will appear:

```
20.11.01               *** Entire Operations 4.1.1 ***               13:45:58
 Owner REQUEST                     Main Menu                   User ID SN
 ------------------------------------------------------------------------------

      Main Menu

   1  Network and Job Maintenance
   2  Active Job Networks
   3  Calendar Maintenance
   4  Log Informati +-------------------------------------+
   5  Symbol Tables !                                     !
   6  System Admini !                                     !
   7  Reports       !           Entire Operations         !
   8  Import/Export !              Node Logon             !
   9  Help          !                                     !
                    !  Node     ===> 510 npr_rsa1         !
                    !  OpSys    ===> AIX                  !
                    !  User ID  ===> sn________________   !
                    !  Group    ===> ____________________ !
                    !  Password ===>                      !
 Command => logon s !                                     ! ___________
Enter-PF1---PF2---P !  PF3 End                            ! PF10--PF11--PF12---
      Help        E +-------------------------------------+       Owner Mail
```

1. Enter a Group. If this field is empty, the user's default UNIX group (from /etc/passwd) is used. Otherwise, this field must contain one of the UNIX groups, which is visible in the output of the UNIX groups command.
2. Enter your correct Password. Press Enter.

   The Operating System Server Status screen appears.

3. Press PF3 to return to the Main Menu.

# Nodes on Windows

For nodes on Windows, the following window will appear:

 Copyright © Software AG 2003

```
20.11.01               *** Entire Operations 4.1.1 ***               10:22:50
 Owner REQUEST                     Main Menu                   User ID SN
 ------------------------------------------------------------------------------

      Main Menu

   1  Network and Job Maintenance
   2  Active Job Networks
   3  Calendar Maintenance
   4  Log Informati +-------------------------------------+
   5  Symbol Tables !                                     !
   6  System Admini !                                     !
   7  Reports       !           Entire Operations         !
   8  Import/Export !              Node Logon             !
   9  Help          !                                     !
                    !  Node     ===> 403 npr_nt_pcsn      !
                    !  OpSys    ===> WIN/NT               !
                    !  User ID  ===> sn_________________  !
                    !  Domain   ===> SAG-HQ_____________  !
                    !  Password ===>                      !
 Command => logon s !                                     ! ___________
Enter-PF1---PF2---P !  PF3 End                            ! PF10--PF11--PF12---
      Help        E +-------------------------------------+       Owner Mail
```

1. Enter a domain. If this field is left blank, then the logon will be carried out without domain. Otherwise, this field must contain a valid domain.
   The default User ID and domain can be used (see Entire Operations Administration Documentation) for combinations of Entire Operations users and operating system servers (nodes).
2. Enter the correct password.
3. Press Enter.
4. The Operating System Server Status screen appears.
5. Press PF3 to return to the Main Menu.

# SAP R/3 System

To be able to log on to an SAP R/3 system, you must have logged on to the corresponding Entire System Server node with LOGON SERVER.

1. Enter the direct command LOGON R3 <node> in the command line. Press Enter.

   The following window opens:

```
  20.11.01              *** Entire Operations 4.1.1 ***              14:03:57
Owner EXAMPLE                      Main Menu                   User ID VMU
-----------------------------------------------------------------------------

     Mai +-----------------------------------------------------+
         !                                                     !
  1  Net !                                                     ! ent (V132)
  2  Act !                  ENTIRE Operations                  ! ment (V141)
  3  Cal !                    SAP R/3 Logon                    !
  4  Log !                                                     !
  5  Sym !  Node        ===> 403 npr_nt_pcsn                   !
  6  Sys !  Destination ===> ________________________________  !
  7  Rep !  Client      ===> ___                               !
  8  Imp !  R/3 User ID ===> ________                          !
  9  Hel !  Password    ===>                                   !
         !                                                     !
         !  PF1 Help   PF3 End                                 !
         !                                                     !
         +-----------------------------------------------------+

 Command => logon r3 403_____________________________________________________
Enter-PF1---PF2---PF3---PF4---PF5---PF6---PF7---PF8---PF9---PF10--PF11--PF12---
     Help        End                                            Owner Mail
```

2. Enter the Destination, the Client and your R/3 User ID.
3. Enter the correct Password. Press Enter.

 Copyright © Software AG 2003

# Entire Operations Main Menu

This subsection covers the following topics:

- Entire Operations Main Menu Screen
- Options on the Main Menu
- Special PF Keys: Main Menu
- Selecting Options

---

## Entire Operations Main Menu Screen

Once you have logged on to Entire Operations, the Main Menu appears. Your menu configuration may vary from the example below, depending on the authorizations in your user profile.

This example of the Main Menu displays all possible options:

```
 20.11.01              *** Entire Operations 4.1.1 ***              10:48:06
 Owner EXAMPLE                     Main Menu                   User ID GHH
 ------------------------------------------------------------------------------

      Main Menu                                DC Solutions

   1  Network and Job Maintenance         20  Entire Event Management (V132)
   2  Active Job Networks                 21  Entire Output Management (V134)
   3  Calendar Maintenance
   4  Log Information
   5  Symbol Tables
   6  System Administrator Services
   7  Reports                                  Applications
   8  Import/Export
   9  Help                                30  sysmain




 Command => ____________________________________________________________
Enter-PF1---PF2---PF3---PF4---PF5---PF6---PF7---PF8---PF9---PF10--PF11--PF12---
      Help        End                                            Owner Mail
```

## Options on the Main Menu

- Left Side - Main Menu
- Right Side - DC Solutions
- Right Side - Applications

You can select the following options on the Main Menu:

### Left Side - Main Menu

1. **Network and Job Maintenance:**
   Define and maintain original job network definitions on the master data base, including job definitions, JCL, user routines, input conditions, end-of-job handling, resources, schedule tables and text descriptions;
2. **Active Job Networks:**

Maintain active data base: this includes active networks and jobs, and all current definitions for a specific job run;

3. **Calendar Maintenance:**
   Maintain original calendar definitions on the master data base;
4. **Log Information:**
   Display different types of system information according to selection criteria;
5. **Symbol Tables:**
   Maintain original symbol table definitions on the master data base;
6. **System Administrator Services:**
   Maintain the Entire Operations environment, this includes user authorizations and maintaining the Entire Operations Monitor, available resources, nodes, system defaults, mailboxes, etc.;
7. **Reports:**
   Generate different types of reports, including workload forecasting on the basis of resources;
8. **Import/Export:**
   Log on to the Import/Export Utility. For further information, see the section Import/Export Utility.
9. **Help:**
   Display the online help facility.

An option is not displayed on your Main Menu (and is therefore not selectable) if your user profile does not contain the appropriate authorization.

## Right Side - DC Solutions

If other Software AG Data Center products are installed, they can be called up directly from Entire Operations.

## Right Side - Applications

If another application is defined in the menu, the name is shown here. For further information, see the subsection User Application in Main Menu in the Entire Operations Administration Documentation.

# Special PF Keys: Main Menu

You can perform the following functions from the Main Menu using these PF keys:

| Key | Name | Function | more |
|---|---|---|---|
| PF11 | Owner | Select a different owner from a selection list. | - |
| PF12 | Mail | Display Mailbox messages and requests. | Mailboxes |

# Selecting Options

**To select an option**

- Enter the identifying number in the Command line and press Enter.

  or

- Alternatively, you can position the cursor on the line in the Main Menu where the option appears and press Enter.

Use one of these methods, as well, for the submenus, such as System Administration, Reports and Cross References.

 Copyright © Software AG 2003

The sections Network Maintenance to Reporting describe each menu option in detail, except the options System Administration Services and Import/Export. The Help option is described in the subsection Online Help Facility of the present section.

# Entire Operations Screens

This subsection covers the following topics:

- Layout and Structure
- Using PF Keys
- Selection Windows
- Confirmation Window when Deleting Items
- Priority of Command Processing
- Date and Time Formats
- Error Messages

---

## Layout and Structure

All Entire Operations screens have a similar layout.
Some data appear on every screen, other data are screen-dependent.

The structure of system screens can be subdivided into several subsections:

- **Headings section**
  The top line contains fields with the current date and time, and a system identifier (Entire Operations). Subsequent lines in this section contain control fields with information such as current owner, network name and job name, as well as a screen name;
- **Main information section**
  Contains the requested information on the selected item and line command input fields (if applicable);
- **Command section**
  Contains a list of available line commands and short descriptions, a direct command input field and a list of available PF keys and their functions.

Some system screens may consist of more than one page. You can use the PF7 (Up) and PF8 (Down) keys to scroll information **up** and **down**. On some screens, you can use the PF10 (Left) and PF11 (Right) keys to scroll **left** and **right**, respectively. A line of asterisks **** with the message Top of data or Bottom of data tells you whether you are on the first or last screen page.

The following figure illustrates a typical Entire Operations screen - the Job Maintenance screen in the Network and Job Maintenance facility:

 Copyright © Software AG 2003

```
 20.11.01              *** Entire Operations 4.1.1 ***              11:32:32
 Owner DWI                     Job Maintenance              Network ACTNW-T03
 ---------------------------------------------------------------------------
 Cmd Job       Type Description           File or Library              Member
     *---------
 _   ACTNW-JB01 JOB Activate single NAT   DWI.SYSF.JCL                 NOPJB01
 _   ACTNW-JB02 JOB Activate single MAC   DWI.SYSF.JCL                 NOPJB01
 _   ACTNW-JB03 JOB Activate single JOB   DWI.SYSF.JCL                 NOPJB01
 _   ACTNW-JB04 JOB Activate single DUM   DWI.SYSF.JCL                 NOPJB01
 _
 _
 _
 _
 _
 _
 _
 _
 ****************************** Bottom of data ******************************
 A Dependencies  C Copy  D Delete  E Edit  I Input Conditions  L Resources
 M Modify  O EOJ Handling  P Prose  R Activate  S Scheduling Parms  U User Log
 Command => ____________________________________________________________
Enter-PF1---PF2---PF3---PF4---PF5---PF6---PF7---PF8---PF9---PF10--PF11--PF12---
      Help  Add   End         Do    Undo  Up    Down                   Menu
```

```
Headings Section                                        Command Section
```

```
Main Information Section                                Line Commands
```

Line commands are screen-dependent and are described for each system screen in the sections Network Maintenance to Reporting. Direct commands can be entered on any screen or window which displays the direct command input field. All available direct commands are described in detail in the section Direct Commands of the Entire Operations Reference Documentation.

Additional ease of use is provided by the following features:

- Some standard functions are assigned to PF keys;
- Use of selection windows and wildcard symbol;
- Confirmation window when deleting items.

These features are described in the following subsections.

# Using PF Keys

Some frequently used functions in Entire Operations are assigned to PF keys. A list of PF keys and associated functions is displayed in the last two lines of any system screen. Some PF keys may be assigned to different functions on different screens, but there are some functions which are always assigned to the same PF key:

| Key | Name | Function |
|---|---|---|
| PF1 | Help | Enter the Entire Operations online help system. |
| PF2 | Add | Add a definition of the selected object type. |
| PF3 | End | Return to previous screen. |
| PF5 | Save | Save changes made to data. |
| PF7 | Up | Scroll displayed data up (backwards). |
| PF8 | Down | Scroll displayed data down (forward). |
| PF10 | Left | Scroll displayed data to the left. |
| PF11 | Right | Scroll displayed data to the right. |
| PF12 | Menu | Return to Main Menu. |

On some screens, object-specific functions may be assigned to PF keys. These are described in the appropriate subsections of this documentation. You can only use a PF key if it appears on the system screen together with the short descriptive text.

# Selection Windows

When you are required to specify an existing item in an input field of an Entire Operations definition screen or window:

1. Enter an asterisk * as a ’wildcard’ in the input field.

   To display a more specialized list, enter a prefix followed by an asterisk. For example, NET* displays a list of all items beginning with NET.

2. Press Enter.
3. A window opens with a list of selectable items.
4. If the desired item is not listed in this window, you can scroll toward the bottom of the list by pressing Enter or PF8 (Down). Press PF7 (Up) to scroll back toward the top of the list.
5. Select an item by marking it with any character.
6. Press Enter.

   The window closes and the name of the selected item is written to the appropriate input field.

# Confirmation Window when Deleting Items

When you wish to delete an item from Entire Operations:

1. Enter the line command **D**.
2. A confirmation window opens.
3. Confirm deletion by entering the name of the item or the letter **Y** (yes).
4. The item is deleted when you press Enter.

# Priority of Command Processing

Commands and data are processing according to the following priority:

 Copyright © Software AG 2003

1. Command line
2. PF keys
3. Data entered in input fields

# Date and Time Formats

The current date and time appears in the top line of nearly every system screen. The format of the date and time is installation-specific and is selected by the system administrator.

Possible date formats are:

| | |
|---|---|
| **MM/DD/YY** | American format |
| **DD/MM/YY** | European format |
| **DD.MM.YY** | German format |
| **YY-MM-DD** | International format |
| **YYYYMMDD** | 8-digit date |

When entering a date, you must adhere to the format chosen for your installation (see the date format in the top line of any system screen).

> **Note:**
> All example screens in this documentation use the German date format. The date may appear in a different format at your installation.

The year is displayed in 2-digit form only on the screens. Internally, 4-digits are used.
For 2-digit date entries you make, the century is calculated +/- 50 years in a sliding window.

Example:

Current date 20.11.2001

| Entry | Complete Date |
|---|---|
| 31.12.99 | 31.12.1999 |
| 01.02.12 | 01.02.2012 |
| 20.07.48 | 20.07.2048 |
| 22.07.48 | 22.07.1948 |

The time of day appears and must be specified in one of the following formats:

| | |
|---|---|
| **HH:MM:SS** | hours, minutes, seconds |
| **HH:MM** | hours, minutes |

The hour range is 0 to 23. Please see the top line of any system screen for the format used at your installation.

# Error Messages

All error messages are displayed in the first screen or window line. You can correct the error on the system screen and continue, or leave the screen with PF3 (End).

For more details, see the section Messages and Codes.

 Copyright © Software AG 2003

# Online Technical Information

Certain user-specific technical information is available online. When you issue the TECH direct command in the command line, a technical information window similar to the following opens with information such as the version number and most recent update of Entire Operations, the Software AG Editor version number, operating system and TP monitor used, etc.

```
 20.11.01              *** Entire Operations 4.1.1 ***              12:00:35
 Owner SN                          Main Menu                  User ID GHH
 ------------------------------------------------------------------------------
            +-------------------------------------------------------+
     Main M !                                                       !
            !  ENTIRE OPERATIONS     V3.1.1   01-11-20              !
   1  Networ !            Update        005   01-11-20              ! V132)
   2  Active !  Editor                V2.2.7   99-08-22              ! (V133)
   3  Calend !  ENTIRE SYSTEM SERVER  V1.3.4   on Node 146           !
   4  Log In !  NATURAL               V2.2     SM 0007               !
   5  Symbol !                                                       !
   6  System !  Program      MENU                                    !
   7  Report !  Map                                                  !
   8  Import !  Library      EOR210   EOR 210 Development            !
   9  Help   !                                                       !
            !  User - Id    GHH      Gerrit Hahn                    !
            !  Date / Time  11/20/01 12:00:48                       !
            !  Terminal     DAEFTC26 VIDEO                          !
            !  TP/OP System COMPLETE DAEF MVS/ESA SP5.1.0 JES2 SP 5 !
            !                                                       !
 Command =>  !  Enter  End                                          ! _
Enter-PF1--- +-------------------------------------------------------+ -PF12---
      Help        End                                            Owner Mail
```

**Note:**
The Update field can contain an update identifie, which is the sequence number of the current update tape that has been sent to the customer by Software AG. This field is empty, if for a released version no update has yet been installed.

# Online Help Facility

Entire Operations provides a comprehensive online help facility to help you select the appropriate function, command or item from any system screen.

Help texts are available on two levels:

- Screen Level
- Field Level

These are explained in the following subsections.

---

## Screen Level

- Invoking Help from the Main Menu
- Invoking Help from a System Screen

The hierarchy of the help screens reflects the hierarchy of Entire Operations system screens. This means that you can invoke the online help facility from any system screen and you immediately see the help text defined for that screen. You can then return to the system screen or ask for more help.

The easiest way to invoke online help for any system screen is to simply press PF1 (Help). Alternatively, you can enter the direct command HELP in the Command => line of any screen and press Enter. From Main Menu, there is also a third alternative: selecting the Help option.

### Invoking Help from the Main Menu

**To enter the online help facility at the top end of the hierarchy**

1. Press PF1 (Help) on the Main Menu.
2. The main Entire Operations Help Menu appears with a list of selectable items and a short explanation of their meaning:

```
 20.11.01                Entire Operations 4.1.1 HELP                 12:01:05
 ---------------------------- Table of contents -----------------------------
 Option ==>                                                            H00000

             E N T I R E   O P E R A T I O N S   H E L P

  Please select one of the following items to get detailed information:

      1   Help about Help   - The Entire Operations Help System       2   The Maps          - Functionality of Entire Operations Maps
      3   Networks and Jobs - Maintenance of Networks and Jobs
      4   Calendars         - Definition and usage of Calendars
      5   Active Queue      - Display and modification of Active Jobs
      6   Symbol Tables     - Symbol table editing
      7   Logging           - Selection and display of Log Information
      8   Dynamic JCL       - How to work with dynamic JCL
      9   System            - System Administrator Utilities
     10   Active Conditions - Maintenance of active Conditions
     11   Editor            - The Entire Operations Editor
     12   Reports           - Entire Operations Reporting Facility
     13   Direct Commands   - How to use the Command Line

Enter-PF1---PF2---PF3---PF4---PF5---PF6---PF7---PF8---PF9---PF10--PF11--PF12---
           Quit  End
```

**To select an item**

1. Enter its number in the Option ==> field at the top of the menu.
2. Press Enter.
3. The first Help screen for the selected item appears (example):

 Copyright © Software AG 2003

```
20.11.01              Entire Operations 4.1.1 HELP                12:02:44
--------------------------- Calendar Maintenance -----------------------------
Option ==>                                                          H13000

 Function
   This screen displays a list of all defined calendars.
   Protected (system) calendars are marked with *.

 Line Commands  ( * Enter letter for more help)
   C   Copy of a calendar.
   D   Deletion of a calendar.
 * L   List (display) of a calendar (modification not possible).
 * M   Modification of a calendar.
   W   Where used.
       Shows the job networks, for which the calendar is defined.

 New calendars can be added with * PF2.



 more ...
Enter-PF1---PF2---PF3---PF4---PF5---PF6---PF7---PF8---PF9---PF10--PF11--PF12---
           Quit  End                          Forw
```

4. Help texts may consist of one or more screen pages. If a help text consists of more pages, you are notified by the prompt more ... at the bottom of the screen. Press PF8 (Forw) to display more help and press PF7 (Up) to return to the previous help screen.
5. Some Help screens provide direct access to help texts on a related item or on another level in the Help screen hierarchy. You can enter the number or letter for the desired item in the Option field at the top of the Help screen and press Enter to display the associated help text. On Help screens which list several items, an asterisk * marks the items on which more help is directly available.

## Invoking Help from a System Screen

**To invoke a screen help**

1. Press PF1 (Help) from any system screen.
2. A help text appears with general information about the screen from which you invoked the online help (example):

```
 20.11.01              Entire Operations 4.1.1 HELP                12:03:10
 ---------------------------- Network Maintenance ----------------------------
 Option ==>                                                          H11000

  Function
    A list of the defined or active networks.
    Various functions are available via line commands.
    New networks can be added with PF2  (appl. to master networks only)

  The fields on the map

  Cmd          For the line command.
  Run          Number of currently active runs for this network.
  Owner        The owner of the network.
  Network      The network name.
  Node         The default node for the jobs in the network.
  Description  A short explanation.
               A bigger description is available with the prose facility.
  Note:  Character 'L' (Loop) is displayed between column Cmd and
         column Run if a definition loop was detected in the network.
  more ...
Enter-PF1---PF2---PF3---PF4---PF5---PF6---PF7---PF8---PF9---PF10--PF11--PF12---
           Quit  End                          Forw
```

3. Some Help screens provide direct access to help texts on a related item or on another level in the Help screen hierarchy. Proceed as described in [5] above.

# Field Level

- Help Text
- Selection Window
- PF Keys: Online Help

On the field level, you can invoke a window containing a help text for the field or a selection list:

## Help Text

**To invoke a field help text from a system screen**

1. Enter a question mark ? in the selected input field.
2. Press Enter.
3. A window opens with an explanation of the field:

 Copyright © Software AG 2003

```
 20.11.01               *** Entire Operations 4.1.1 ***               12:04:11
 Owner EXAMPLE                  Job Maintenance             Network E60-FLOW
  +-----------------------------------------------------------------------+ --
  !                                                                      ! er
  !                          Master Job Definition                       !
  !                                +-----------------------------------------+
  !  Job Name       ==> JOB-012___ !                                       !
  !  Description    ==> Depending  !               Symbol Table            !
  !  Job Type       ==> MAC        !                                       !
  !  Execution Node ==> 146 MVS/ES !  The Symbol Table contains the Variables !
  !  Special Type   ==> _          !  for the Dynamic JCL Generation.      !
  !  Restartable    ==> _          !  It can be maintained manually or be  !
  !                                !  modified by programs.                !
  !  JCL Location   ==> NAT        !                                       !
  !  JCL Node       ==> 148 MVS/ES !  Enter * to select a Symbol Table.    !
  !  File/NatLib    ==> EOR-T210__ +-----------------------------------------+
  !  Member         ==> E60-M01_ ________                                 !
  !  VolSer         ==> ______  (if not catlgd)   Password ==>            ! **
  ! Enter-PF1---PF2--PF3--PF4---PF5---PF6---PF7---PF8--------PF10---PF12-  !
  !       Help  Add  End  Edit  Save  Spec  Symb  Impo       Copy   Menu   ! g
  +-----------------------------------------------------------------------+
Enter-PF1---PF2---PF3---PF4---PF5---PF6---PF7---PF8---PF9---PF10--PF11--PF12---
      Help  Add   End         Save        Up    Down                    Menu
```

## Selection Window

See the subsection Selection Windows.

## PF Keys: Online Help

The following PF keys are available in the online help facility:

| Key | Name | Function |
|---|---|---|
| PF2 | Quit | Leave the online help facility. |
| PF3 | End | Return to previous screen. |
| PF7 | Back | Scroll up (backwards). |
| PF8 | Forw | Scroll down (forward). |

# Network Maintenance

This section tells you how to define and maintain job networks. For information on all definitions made at the job and event level, see the section Job Maintenance.

It covers the following topics:

- How to Invoke the Network Maintenance Facility
- Selecting Range of Networks to be Listed
- Adding a Job Network Definition
- Modifying a Job Network Definition
- Network Defaults: Operating System-Specific Entries
- Network Defaults for BS2000/OSD
- Network Defaults for OS/390
- Network Defaults for UNIX and Windows
- Network Defaults for SAP R/3
- Applying Network Defaults to Jobs
- Specifying Recipients for Network Messages
- Listing Active Jobs for a Network
- Copying a Job Network Definition
- Deleting a Job Network
- Displaying Overview of Job Flow within a Network
- Authorizing Other Users to Access a Network
- Checking for a Loop in a Job Network
- Listing Jobs
- Deactivating Active Jobs
- Creating Online Documentation for a Network
- Activating a Job Network Manually
- Display Network Accounting Data
- Symbol Prompting during Manual Activation
- Symbol Prompting User Routine

 Copyright © Software AG 2003

# How to Invoke the Network Maintenance Facility

This subsection covers the following topics:

- Network Maintenance Screen
- Column Headings: Network Maintenance
- Special PF Keys: Network Maintenance
- Line Commands: Network Maintenance

---

## Network Maintenance Screen

**To invoke the Network and Job Maintenance facility**

- Select the Network and Job Maintenance option on the Main Menu.

  When you select the Network and Job Maintenance option on the Main Menu, the following screen appears:

```
 20.11.01              *** Entire Operations 4.1.1 ***             10:35:44
 Owner EXAMPLE                 Network Maintenance
 Selection OR________
-------------------------------------------------------------------------------
 Cmd #Run Owner      Network    Node Description
          *--------- *---------
 _        EXAMPLE    B60-FLOW    31  Job Flow, BS2000
 _        EXAMPLE    B60-FLOW38  38  Job Flow, BS2000
 _ L    2 EXAMPLE    E01-CONTI  148  Completion-Codes, Job Duration
 _        EXAMPLE    E02-IOC-01 148  I/O Conditions without events
 _        EXAMPLE    E03-IOC-02 148  I/O Conditions with code events
 _        EXAMPLE    E04-IOC-03 148  I/O Conditions with string events
 _        EXAMPLE    E05-IOC-04 148  I/O Conditions with user routine event
 _ L      EXAMPLE    E10-PAR-01 148  Parallel & sequential job execution
 _      1 EXAMPLE    E20-DYN-01 146  Dynamic JCL generation
 _     11 EXAMPLE    E40-REC-01 146  Cause a recovery situation
 _      3 EXAMPLE    E40-REC-02 146  Recovery and Reschedule
 ********************************** m o r e **********************************
  A Active C Copy D Delete F Flow G Grant H Check L List Jobs M Modify
  N Deact P Prose R Activate S Schedule T Acct W Display Schedule X History
 Command => ____________________________________________________________
Enter-PF1---PF2---PF3---PF4---PF5---PF6---PF7---PF8---PF9---PF10--PF11--PF12---
      Help  Add   End         Save        Up    Down              NxtSt Menu
```

  When one or more job networks are defined for the owner, they appear in the main information section of this screen.

## Column Headings: Network Maintenance

The following table explains the column headings for the data listed on the Network Maintenance screen:

| Column | Description | |
|---|---|---|
| Cmd | One-character line command input field. Possible values are listed in the command section of the screen (see also the subsection Line Commands: Network Maintenance). | |
| | **Note:** | The letter L (loop) appears between the Cmd and #Run columns if a loop was found during a loop test for the corresponding network. For further information, see the field description for Loop exists. |
| #Run | Number of currently active runs for the corresponding network. | |
| Owner | Owner name of the network; the first line contains the prefix specification used to obtain the list of networks: enter an asterisk * and press Enter to list networks belonging to the current owner (see screen header) and networks of all other owners for which you are authorized, or enter ABC* and press Enter to list networks belonging to all owners whose names begin with ABC. | |
| Network | User-defined network name; the first line contains the prefix specification used to obtain the list of networks: enter an asterisk * to list all networks belonging to the specified owners, or enter ABC* to list networks whose names begin with ABC. | |
| Node | Default execution node ID for the jobs in the network. | |
| Description | Short description of the network. | |

For information on how to use the Selection field, see the subsection Selecting Range of Networks to be Listed.

# Special PF Keys: Network Maintenance

You can perform the following functions from the Network Maintenance screen using these PF keys:

| Key | Name | Function |
|---|---|---|
| PF2 | Add | Add a network definition. |
| PF11 | NxtSt | Display a system-wide list of all planned job and network activations. |

# Line Commands: Network Maintenance

You can perform several functions on any network listed on the Network Maintenance screen using the following line commands:

 Copyright © Software AG 2003

| Cmd | Description |
|---|---|
| A | List all active jobs for the network. Use this command to maintain active jobs. |
| C | Copy all definitions of the selected network for a new network. |
| D | Delete the selected network, including all jobs and all other definitions for this network. |
| F | Display overview of job flow within network. |
| G | Grant other users access to this network. |
| H | Check for loops in the network. |
| L | List all jobs defined for this network. Use this command for Job Maintenance. |
| M | Modify selected network definition. |
| N | Deactivate active jobs, selectable by dates. |
| P | Prose. Invoke the Entire Operations Editor to write an online text description for the selected network. |
| R | Activate the selected network manually. |
| S | Define a schedule for the network. |
| T | Display network accounting data. See also Network and Job Accounting Data. |
| W | Display defined schedule for the selected network. |
| X | Display execution history (previous network runs) |

The following subsections describe in detail the functions you can perform on each job network using line commands and PF keys.

# Selecting Range of Networks to be Listed

You can specify the range of networks to be listed by entering one or more of the following values in the Selection field on the Network Maintenance screen and pressing Enter:

| Value | Description |
|---|---|
| A | Only networks with at least one active run are listed. |
| G | Granted networks are listed for Owner selected on Network Maintenance screen (excluding current owner). |
| O | Networks of current owner are listed. Owner selected on Network Maintenance screen has no effect. |
| R | Number of active runs is shown in the #Run column. Using this option could increase database access. |

You **must** specify at least either **O** or **G**. You **can** specify both **O** and **G** together. The default value is OR.

If you enter a question mark ? in the Selection field and press Enter, the following selection window opens:

```
 20.11.01               *** Entire Operations 4.1.1 ***              10:35:44
 Owner EXAMPLE                 Network Maintenance
 Selection ?R________
------------ +---------------------------------+ ------------------------------
 Cmd #Run Ow !                                 !
          *- !        Network Selection        !
 _      9 EX !                                 ! 2000
 _        EX !  O   Networks of Owner          ! 2000
 _      1 EX !  G   Granted Networks           ! odes, Job Duration
 _        EX !  A   Active Networks only       ! ns without events
 _        EX !  R   with number active runs    ! ns with code events
 _        EX !                                 ! ns with string events
 _        EX !  Multiple selections possible.  ! ns with user routine event
 _        EX !                                 ! equential job execution
 _        EX !  Select ==> OR________          ! generation
 _      6 EX +---------------------------------+ very situation
 _        EXAMPLE    E40-REC-02 146  Recovery and Reschedule
 ********************************** m o r e ********************************
  A Active C Copy D Delete F Flow G Grant H Check L List Jobs M Modify
  N Deact P Prose R Activate S Schedule T Acct W Display Schedule X History
 Command => ____________________________________________________________
Enter-PF1---PF2---PF3---PF4---PF5---PF6---PF7---PF8---PF9---PF10--PF11--PF12---
      Help  Add   End         Save        Up    Down              NxtSt Menu
```

Enter one or more of the above values in the Select field and press Enter to display the selected networks.

 Copyright © Software AG 2003

# Adding a Job Network Definition

This subsection covers the following topics:

- Defining a New Network
- Special PF Keys: Network Addition/Modification
- Field Descriptions: Network Addition/Modification

---

## Defining a New Network

**To add a new network definition**

1. Press PF2 (Add) from the Network Maintenance screen.
2. The Network Addition window opens:

```
  04.01.02               *** Entire Operations 4.1.1 ***               11:17:37
 Owner SN                      Network Maintenance
 Selection OR________
- +-------------------------------------------------------------------------+ --
  !                                                                         !
  !                             Network Addition                            !
  !  Network      ===> __________                   Owner ===> SN           !
  !  Description  ===> ______________________________________________       !
  !                                                 Loop existing ===>      !
  !  Default Values for the Jobs                                            !
  !    Execution Node ===> 148  MVS/ESA      Symbol Table ===> __________   !
  !    JCL Node       ===> 148  MVS/ESA         Esc Act ===> _ Sub ===> _   !
  !    JCL Location   ===> ___           Sym.Table Activation Mode ===> _   !
  !                                                                         !
  !    File   ===> ____________________________________________________    !
  !    VolSer ===> ______                            Password ===>           !
  !                                                   defined ===> no       !
  !  --PF1-----PF3-----PF5---PF6---PF7---PF8---PF9---PF10---PF11---PF12--   ! **
  !    Help    End     Save  Spec  Symb  SP-UR DfJb  Copy   MsgRe  Menu    !
  +-------------------------------------------------------------------------+
 Command => ____________________________________________________________
Enter-PF1---PF2---PF3---PF4---PF5---PF6---PF7---PF8---PF9---PF10--PF11--PF12---
      Help  Add   End         Save        Up    Down              NxtSt Menu
```

3. Define the network by entering values for the fields (see Field Descriptions: Network Addition/Modification) and using the PF keys as described below.

## Special PF Keys: Network Addition/Modification

You can perform the following functions using these PF keys in the Network Addition/Modification window:

| Key | Name | Function |
|---|---|---|
| PF6 | Spec | Special definitions for different operating systems. |
| PF7 | Symb | Edit the specified symbol table. |
| PF8 | SP-UR | Define a symbol prompt user routine. |
| PF9 | DfJb | Apply network defaults to jobs. |
| PF10 | Copy | Copy a network definition. |
| PF11 | MsgRe | Specify message recipients for the network. |

1. Press PF5 (Save) to save the network definition.
2. Press PF3 (Exit) to return to the Network Maintenance screen.
3. The new network is now listed on the Network Maintenance screen.

# Field Descriptions: Network Addition/Modification

The input fields of the Network Addition/Modification window are described in the following table:

| Field | Description | | |
|---|---|---|---|
| Network | Network name. Together with owner name, uniquely identifies the network in the master database. | | |
| Owner | Owner name. | | |
| Description | Short description of network. This text appears in the list of networks on the Network Maintenance screen. A longer description of the network can be added using the Editor (see the subsection Creating Online Documentation for a Network). | | |
| Loop exists | Y (=loop exists) appears here: if a loop has been found in the network while linking network jobs via their input and output conditions or while defining input and output conditions of a job.<br>N (=loop does not exist) appears here: if no loop has been found in the network, or if no loop test has yet been performed, for example, with the line command H. | | |
| Default Values for the Jobs: The input fields under this heading serve to specify default values for subsequent new job definitions in the network. Each default value specified here can be overridden at the job level. | | | |
| Execution Node | Default node ID on which jobs within this network are submitted. This value can be modified here or overridden at the job level. To list the possible nodes, type an asterisk * here and press Enter. The operating system type appears after a valid node number. To display the field help, type a question mark ? here and press Enter. | | |
| JCL Node | Node on which JCL can be accessed. The default is the same as for the execution node. The operating system type appears after a valid node number. | | |
| JCL Location | Type of physical storage for the JCL. Possible values: | | |
| | (blank) | | None (No JCL required) |
| | BS2 | (BS2000/OSD) | SAM or ISAM file |
| JCL Location | EXE | (Win NT) | Executable program running in the background. The defined program must not wait for the user to enter data. |
| | LIB | (OS/390) | Librarian |
| | LMS | (BS2000/OSD) | LMS library |

 Copyright © Software AG 2003

| | | | |
|---|---|---|---|
| | NAT | | Natural source |
| | PDS | (OS/390) | Partitioned data set |
| JCL Location (cont.) | PRC | (BS2000/OSD) | Callable procedure |
| | RDR | (VSE/ESA) | VSE/ESA Reader Queue, for STC |
| | TXT | (UNIX, Win NT) | Text file |
| | VSE/ESA | (VSE/ESA) | VSE/ESA Sublib |
| | The default is set in the job definition and can be overridden here. | | |
| Symbol Table | Default symbol table for those jobs in the network that use the dynamic JCL generation facility. Can be overridden at the job level and is therefore optional here. Enter an asterisk * and press Enter to display a selection list of available symbol tables. The selected symbol table can be edited using <PF7> (Symb). | | |
| Esc Act | Activation Escape Character<br>= Network default value<br>This escape character is the prefix for Natural code lines and symbols to be replaced at activation time.<br>**CAUTION:**<br>Existing Dynamic JCL might become invalid after changing this escape character and applying defaults to jobs. | | |
| Esc Sub | Submission Escape Character<br>= Network default value<br>This escape character is the prefix for Natural code lines and symbols to be replaced at submission time.<br>**CAUTION:**<br>Existing Dynamic JCL might become invalid after changing this escape character and applying defaults to jobs. | | |
| Symbol Table Activation Mode | **A** | During the network activation. No symbol prompting is possible. | |
| | **X** | After schedule extraction. Symbol prompting can be used for scheduled networks. This is the default. | |
| File | Name of the file or Natural library according to the value of the JCL Location field. | | |
| VolSer | Volume serial number of data set (if data set is not cataloged). | | |
| Password | Password if the file or library specified in the Dataset field is password protected. | | |
| defined | **no** = no password is defined.<br>**yes** = a password is defined. | | |

# Modifying a Job Network Definition

**To modify an existing network definition**

1. Type **M** in the line command field of the selected network on the Network Maintenance screen.
2. Press Enter.
3. The Network Modification window opens with the current values for the network.
4. Modify any value.
5. Press PF9 (DfJb) to apply network defaults to jobs.
6. Press PF5 (Save) to save all changes.
7. Press PF3 (Exit) to return to the Network Maintenance screen.

 Copyright © Software AG 2003

# Network Defaults: Operating System-Specific Entries

**To view operating system-specific default entries for one or more operating systems**

1. Press PF6 (Spec) in the Network Modification screen.

   The following window opens:

```
04.01.02                *** Entire Operations 4.1.1 ***                11:24:09
 Owner SN                       Network Maintenance
 Selection OR________
- +-------------------------------------------------------------------------+ --
  !                                                                         !
  !                           Network Modification                          !
  !  Network      ===> A-1_______                    Owner ===> SN          !
  !  Description  ===> Time Range Test ..._____________________________     !
  !                                                  Loop existing ===> N   !
  !  Default Values f +----------------------------------------+            !
  !    Execution Node !                                        ! -01_____   !
  !    JCL Node       !  Please select the Operating System    ! b ===> _   !
  !    JCL Location   !                                        ! e ===> X   !
  !                   !          _  BS2000                     !            !
  !    File   ===> NO !          _  MVS                        ! ________   !
  !    VolSer ===> __ !          _  VSE                        !            !
  !                   !          _  UNIX, Windows              ! no         !
  !  --PF1-----PF3--- !                                        ! --PF12--   ! **
  !    Help    End    !  or Environment                        !   Menu     !
  +------------------ !                                        ! ----------+
 Command => _________ !          _  SAP R/3                    ! _______
Enter-PF1---PF2---PF3 !                                        ! -PF11--PF12---
      Help  Add   End +----------------------------------------+  NxtSt Menu
```

2. Choose an entry.

   For more information about the specific operating system settings, please use one of the following links:

   - Operating System Specials for BS2000 / OSD
   - Operating System Specials for MVS (OS/390)
   - Operating System Specials for VSE
   - Operating System Specials for Unix, Windows
   - Environment Specials for SAP R/3

# Network Defaults for BS2000/OSD

**To define network defaults for BS2000/OSD**

1. Press PF6 (Spec) from the Network Modification screen and select operating system BS2000/OSD.
2. The Network Defaults (BS2000/OSD) window opens:

```
04.01.02                *** Entire Operations 4.1.1 ***                11:42:53
 Owner SN                      Network Maintenance
 Selection OR________
- +-- +-------------------------------------------------------------------+ -+ --
  !   !                                                                   !  !
  !   !                     Network Defaults  (BS2000)                    !  !
  !   !                                                                   !  !
  !   !  Network      ===> A-1                     Owner ===> SN          !  !
  !   !  Description  ===> Time Range Test ...                            !  !
  !   !  JCL Node     ===> 148             Execution Node ===> 146        !  !
  !   !                                                                   !  !
  !   !  Default Values for the Jobs                                      !  !
  !   !   Esc Activation ===> _                                           !  !
  !   !       Esc Submit ===> _                                           !  !
  !   !  Default User ID ===> ________     Submit User ID ===> SN______   !  !
  !   !      JCL User ID ===> ________     Sysout User ID ===> ________   !  !
  !   !        Job Class ===> ________     Sysout Cat  ID ===> ____       !  !
  !   !   Account Number ===> ________                                    !  ! **
  !   !                                                                   !  !
  +-- !  --PF1-----PF3--------PF5------------------------------------- ! -+
 Comm !    Help    End        Save                                       !
Enter +-------------------------------------------------------------------+ 12---
      Help  Add   End +----------------------------------------+  NxtSt Menu
```

3. Enter the network defaults for BS2000/OSD in the fields provided:

 Copyright © Software AG 2003

| Field | Description |
|---|---|
| Esc Activation | Activation Escape Character<br>= Network default value specific for operating system<br>This escape character is the prefix for Natural code lines and symbols to be replaced at activation time.<br>**CAUTION:**<br>Existing Dynamic JCL might become invalid after changing this escape character and applying defaults to jobs. |
| Esc Submit | Submission Escape Character<br>= Network default value specific for operating system<br>This escape character is the prefix for Natural code lines and symbols to be replaced at submission time.<br>**CAUTION:**<br>Existing Dynamic JCL might become invalid after changing this escape character and applying defaults to jobs. |
| Default User ID | This user ID is a default for all objects of this job network or job which are linked to a user ID. |
| JCL User ID | If this field is not empty, the JCL is loaded with the rights of this BS2000/OSD user ID. It can be overwritten with specific definitions.<br>TSOS may only be defined if the user itself has logged on under TSOS.<br>Default: The user ID from the fully qualified file name.<br>If this field is left empty in a job definition, then the Default User ID will be inserted during the activation of the job. |
| Job Class | This job class is a default for all jobs in the network. It can be overridden by specific definitions. |
| Account Number | This account number is a default for the Submit user ID defined for the job network. It can be overridden by specific definitions. |
| Submit User ID | The Entire Operations Monitor starts jobs in BS2000/OSD under this user ID. In the network definition, this is a default value for the jobs.<br>If this field is left empty in a job definition, then the Default User ID is inserted during the activation of the job. |
| Sysout User ID | This is the user ID under which internal SYSOUT files are created by Entire Operations. If you do not enter an ID here, the Submit user ID is used. |
| Sysout Cat ID | This is the catalog ID under which internal SYSOUT files are created by Entire Operations. This field is meaningful only if a SYSOUT user ID different from the submit user ID is used. |

# Network Defaults for VSE/ESA

**To define network defaults for VSE/ESA**

1. Press PF6 (Spec) from the Network Modification screen and select operating system VSE/ESA.
2. The Network Defaults (VSE) window opens:

```
04.01.02                *** Entire Operations 4.1.1 ***                11:42:53
 Owner SN                       N +-----------------------------------------+
 Selection OR________             !                                          !
- +-------------------------------------------------------------------------+  -
  !                                                                          !
  !                           Network Modification                           !
  !   +-------------------------------------------------------------------+  !
  !   !                                                                   !  !
  !   !                       Network Defaults  (VSE)                     !  !
  !   !                                                                   !  !
  !   !  Network      ===> A-1                     Owner ===> SN          !  !
  !   !  Description  ===> Time Range Test ...                            !  !
  !   !  JCL Node     ===> 148            Execution Node ===> 146         !  !
  !   !                                                                   !  !
  !   !  Default Values for the Jobs                                      !  !
  !   !   Esc Activation ===> _                                           !  !
  !   !       Esc Submit ===> _                                           !  !
  !   !                                                                   !  ! **
  !   !  --PF1-----PF3--------PF5------------------------------------- !  !
  +-- !    Help    End        Save                                       ! -+
 Comm !                                                                   !
Enter +-------------------------------------------------------------------+ 12---
      Help  Add   End +----------------------------------------+  NxtSt Menu
```

3. Enter the network defaults for VSE/ESA in the fields provided:

| Field | Description |
|---|---|
| Esc Activation | Activation Escape Character<br>= Network default value specific for operating system<br>This escape character is the prefix for Natural code lines and symbols to be replaced at activation time.<br>**CAUTION:**<br>Existing Dynamic JCL might become invalid after changing this escape character and applying defaults to jobs. |
| Esc Submit | Submission Escape Character<br>= Network default value specific for operating system<br>This escape character is the prefix for Natural code lines and symbols to be replaced at submission time.<br>**CAUTION:**<br>Existing Dynamic JCL might become invalid after changing this escape character and applying defaults to jobs. |

 Copyright © Software AG 2003

# Network Defaults for OS/390

**To define network defaults for OS/390**

1. Press PF6 (Spec) from the Network Modification screen and select operating system OS/390.
2. The Network Defaults (OS/390) window opens:

```
04.01.02                *** Entire Operations 4.1.1 ***                11:42:53
 Owner SN                      N +-----------------------------------------+
 Selection OR________            !                                          !
- +-------------------------------------------------------------------------+  -
  !                                                                         !
  !                          Network Modification                           !
  !   +-------------------------------------------------------------------+  !
  !   !                                                                   !  !
  !   !                      Network Defaults  (MVS)                      !  !
  !   !                                                                   !  !
  !   !  Network      ===> A-1                     Owner ===> SN          !  !
  !   !  Description  ===> Time Range Test ...                            !  !
  !   !  JCL Node     ===> 148            Execution Node ===> 146         !  !
  !   !                                                                   !  !
  !   !  Default Values for the Jobs                                      !  !
  !   !   Esc Activation ===> _                                           !  !
  !   !       Esc Submit ===> _                                           !  !
  !   !   Submit User ID ===> SN______                                    !  ! **
  !   !                                                                   !  !
  +-- !  --PF1-----PF3--------PF5------------------------------------- ! -+
 Comm !    Help    End        Save                                       !
Enter +-------------------------------------------------------------------+ 12---
      Help  Add   End +----------------------------------------+  NxtSt Menu
```

3. Enter the network defaults for OS/390 in the fields provided:

| Field | Description |
|---|---|
| Esc Activation | Activation Escape Character<br>= Network default value specific for operating system<br>This escape character is the prefix for Natural code lines and symbols to be replaced at activation time.<br>**CAUTION:**<br>Existing Dynamic JCL might become invalid after changing this escape character and applying defaults to jobs. |
| Esc Submit | Submission Escape Character<br>= Network default value specific for operating system<br>This escape character is the prefix for Natural code lines and symbols to be replaced at submission time.<br>**CAUTION:**<br>Existing Dynamic JCL might become invalid after changing this escape character and applying defaults to jobs. |
| Submit User ID | The Entire Operations Monitor starts jobs in OS/390 under this user ID. You can only define this user ID if you have logged on to the executing node with the same user ID.<br>Default: If this field is empty, the user ID of the last modification is taken as submit user ID. |

# Network Defaults for UNIX and Windows

**To define network defaults for UNIX and Windows**

1. Press PF6 (Spec) from the Network Modification screen and select operating systems UNIX, Windows.
2. The Network Defaults (UNIX, Windows) window opens:

```
04.01.02               *** Entire Operations 4.1.1 ***               11:42:53
 Owner SN                      N +-----------------------------------------+
 Sele +-------------------------------------------------------------------+ !
- +-- !                                                                    !   -
  !   !                 Network Defaults  (UNIX, Windows)                 !
  !   !                                                                   !
  !   !  Network      ===> A-1                     Owner ===> SN          !
  !   !  Description  ===> Time Range Test ...                            !
  !   !  JCL Node     ===> 148            Execution Node ===> 146         !
  !   !                                                                   !
  !   !  Default Values for the Jobs                                      !
  !   !   Esc Activation ===> _                                           !
  !   !       Esc Submit ===> _                                           !
  !   !      JCL User ID ===> ____________________                        !
  !   !      JCL   Group ===> ____________________                        !
  !   !                                                                   !
  !   !   Submit User ID ===> SN__________________                        !
  !   !   Submit   Group ===> ____________________                        !  **
  !   !                                                                   !
  +-- !  --PF1-----PF3--------PF5--------------------------------------  !
 Comm !    Help    End        Save                                        !
Enter +-------------------------------------------------------------------+ ---
      Help  Add   End +----------------------------------------+  NxtSt Menu
```

3. Enter the network defaults for UNIX and Windows in the fields provided:

 Copyright © Software AG 2003

| Field | Description |
|---|---|
| Esc Activation | Activation Escape Character<br>= Network default value specific for operating system<br>This escape character is the prefix for Natural code lines and symbols to be replaced at activation time.<br>**CAUTION:**<br>Existing Dynamic JCL might become invalid after changing this escape character and applying defaults to jobs. |
| Esc Submit | Submission Escape Character<br>= Network default value specific for operating system<br>This escape character is the prefix for Natural code lines and symbols to be replaced at submission time.<br>**CAUTION:**<br>Existing Dynamic JCL might become invalid after changing this escape character and applying defaults to jobs. |
| JCL User ID | With the authorization of this user ID, the Entire Operations Monitor loads the JCL of type TXT. |
| JCL Group (optional, UNIX only) | If this field is left blank, the standard group of the UNIX user ID is used as defined under /etc/passwd.<br>Otherwise, this field must contain one of the groups issued by the UNIX command groups. |
| Submit User ID | With the authorization of this user ID, the Entire Operations Monitor starts the script or the executable program. |
| Submit Group (optional, UNIX only) | If this field is left blank, the standard group of the UNIX user ID is used as defined under /etc/passwd.<br>Otherwise, this field must contain one of the groups issued by the UNIX command groups. |

# Network Defaults for SAP R/3

**To define network defaults for SAP R/3**

1. Press PF6 (Spec) from the Network Modification screen and select the environment SAP R/3.
2. The Network Defaults (SAP R/3) window opens:

```
 20.11.01               *** Entire Operations 4.1.1 ***              11:52:12
 Owner SN                     Network Maintenance
 Selection OR________
- +-------------------------------------------------------------------------+ --
  !                                                                          !
  !                          Network Modification                            !
  !   +-------------------------------------------------------------------+
  !   !                                                                    !
  !   !                    Network Defaults  (SAP R/3)                     !
  !   !                                                                    !
  !   !  Network      ===> R3-403                  Owner ===> SN           !
  !   !  Description  ===> R3 test on pcsn                                 !
  !   !                                                                    !
  !   !  Default Values for the Jobs                                       !
  !   !      Destination ===> ________________________________             !
  !   !      Client      ===> ___                                          !
  !   !                                                                    !
  !   !  --PF1-----PF3--------PF5--------------------------------------  !  **
  !   !    Help    End        Save                                        !
  +-- +-------------------------------------------------------------------+
 Command => _________ !          x  SAP R/3                    ! _______
Enter-PF1---PF2---PF3 !                                        ! -PF11--PF12---
      Help  Add   End +----------------------------------------+  NxtSt Menu
```

3. Enter the network defaults for SAP R/3 in the fields:

| Field | Description |
|---|---|
| Destination | SAP R/3 Destination |
| Client | SAP R/3 Client |

 Copyright © Software AG 2003

# Applying Network Defaults to Jobs

**To apply any defaults modified in the network definition to all jobs in the network**

- Press **PF9** (DfJb) on the Network Modification screen.

  The following window opens:

```
       +-------------------------------------------------------------------+
 04.0 !                                                                   !
 Owne !  Network A-1                                       Owner SN       !
 Sele !               Application of Network Defaults to Jobs             !
- +-- !                                                                   ! -
  !   !  Cmd                  old        new           Cmd         old new !
  !   !  _ Symbol Table                  SN-01         _ Exec Node     146 !
  !   !  _ JCL    User ID                              _ JCL  Node     148 !
  !   !  _ JCL    Group                                _ JCL  Loc      PDS !
  !   !  _ Submit User ID                SN            _ Esc  Act          !
  !   !  _ Submit Group                                _ Esc  Sub          !
  !   !  _ BS2000 Def User ID                                              !
  !   !  _ BS2000 Job Class                                                !
  !   !  _ BS2000 Acct Number                                              !
  !   !  _ Sysout User ID                                                  !
  !   !  _ Sysout Cat  ID                                                  !
  !   !  _ Modifying User     (all)      SN                                !
  !   !  _ File Name                                                       !
  !   !    old                                                             ! *
  !   !    new NOP.EXAMPLE.JCL                                             !
  +-- !   S only if same old  A all                                        !
 Comm !  ---------------------------------------------------------------   !
Enter !  PF1 Help      PF3 End       PF6 R/3                              ! -
       +-------------------------------------------------------------------+
```

All input fields on this screen are described in detail in the subsection Field Descriptions: Network Addition/Modification.

Whether or not the new value replaces the old value is determined by a line command entered in the line command input field in the window (column headed Cmd). This allows you to distinguish between those jobs which have the defaults set for the network and those jobs for which specific values have been defined.

## Line Commands: Application of Network Defaults to Jobs

The line commands available are:

| Cmd | Description |
|---|---|
| S | Replace value only if the old value matches the old default. Specific definitions made at the job level remain unchanged. |
| A | Replace all values regardless of whether they are default settings or specific definitions. |

If you leave a line command field blank, no modifications are made.

**Note:**
For each job, for which definitions have been changed by the above function, the following items are logged:

1. name of definition changed
2. new value.

 Copyright © Software AG 2003

# Specifying Recipients for Network Messages

This function enables you to define a message that is sent to one or more users when a specified event occurs. This is especially useful for sending information about the abnormal end of a job.

This subsection covers the following topics:

- Defining Message Recipients
- Events
- Message Recipients

---

## Defining Message Recipients

**To define message recipients, press PF11 (MsgRe) from the Network Addition/ Modification window**

- Press **PF9** (DfJb) on the Network Modification screen.

  The message receiver definition screen opens. Please find more about its functionality here.

## Events

Among the events, which can cause a message to be sent, are:

- a calendar not defined for next year;
- a network not correctly terminated;
- symbol prompting requests.

The specific message text is generated automatically by the Entire Operations Monitor.

## Message Recipients

If Con-nect is installed in your system, the message is routed to the defined Con-nect user ID(s). The message includes the environment (Owner, Network, Job, Run) and the standard event text.

If sending to Con-nect is not possible, the message is routed via Entire System Server to the TP system user with the designated user ID. If no special node has been defined, the executing node is used.

If you enter =MAILBOX in the Processor field, the message is sent to the Entire Operations internal mailbox.

**Note:**
If no message recipient is defined for a network, the messages are sent to the SYSDBA mailbox.

For further details on mailboxes, see the section Mailboxes.

# Listing Active Jobs for a Network

**Note:**

The number of active runs is given in the #Run column of the Network Maintenance screen.

**To list active jobs for a network**

1. Type **A** in the line command field of the selected network.
2. Press Enter.
3. The Active Jobs screen appears with a list of active jobs for the selected network:

```
 20.11.01               *** Entire Operations 4.1.1 ***              14:45:45
 Owner  EXAMPLE                   Active Jobs               Network E01-CONTI
 Selection A_________                                   Run from 385__ to 385__
-------------------------------------------------------------------------------
 C   Job          Run Typ    JobId Node Date  Time Message
     *---------
 _   E01-J01      385 JOB     7688 148 18.11 00:00 Ended ok
 _   E01-J02      385 JOB     1000 148       00:00 Ended not ok - STEP02 C0012
 _   E01-J03      385 JOB     1001 148       00:00 Ended not ok - STEP03 SE37
 _   E01-J04      385 JOB     1002 148       00:00 Ended not ok - STEP03 C0012
 _   E01-J05      385 JOB     1003 148       00:02 Ended ok
 _   E01-J06      385 JOB     1006 148       00:01 Ended ok
 _
 _
 _
 _
 _
 ******************************** Bottom of Data ********************************
 A Sched.Parms C Cancel D Deact E Edit G Gen.JCL H Hold I Input Cond J JCL
 L Resource M Modify O EOJ P Prose R Resubmit S Sysout U Release W Waiting for
 Command => ____________________________________________________________
Enter-PF1---PF2---PF3---PF4---PF5---PF6---PF7---PF8---PF9---PF10--PF11--PF12---
      Help  Add   End   ACond Save        Up    Down  ATask Left  Right Menu
```

Within this list you can perform the same functions as if you had selected the option Active Job Networks from the Main Menu. For more information on active jobs and networks, see the section Active Job Networks.

**Note:**
All job and network definitions are stored on the master database.
All active jobs and networks are maintained on the active database.

 Copyright © Software AG 2003

# Copying a Job Network Definition

When defining a new network, you can select an existing network and all its definitions from the Network Maintenance screen as a model for the new network.

**To do so**

1. Select an existing network to be copied.
2. Type **C** in the line command field of the network to copy.
3. Press Enter. (Alternatively, you can press PF10 (Copy) from the Network Modification screen of the network to copy.)
4. The following window opens in which the names of owner and network to copy from already appear in the From fields:

```
 20.11.01                *** Entire Operations 4.1.1 ***                15:18:26
 Owner EXAMPLE                Network Maintenance
 Selection OR________
-------------------------------------------------------------------------------
 Cmd #Run Owner      Network    Node Description
          *--------- *---------
 c     43 EXAMPLE    ADMIN      146  Administrator workshop
 _        EXAMPLE    ADMIN2     146  Administrator workshop
 _        EXAMPLE    B60-FLOW    31  Job Flow, BS2000
 _        +-------------------------------------------------------------+
 _        !                                                             !
 _        !                Network Master Definition Copy               !
 _      3 !                                                             !
 _        !      From                          To                      !
 _        !      Owner     ==> EXAMPLE___      Owner    ==> EXAMPLE    !
 _        !      Network   ==> ADMIN_____      Network  ==> __________ !
 _        !      Alt. File ==> N (Y/N)                                 !
 ******** !                                                             ! *****
  A AktJo !  PF3 End                                                   ! akt
  P Besch +-------------------------------------------------------------+
 Command => ____________________________________________________________
Enter-PF1---PF2---PF3---PF4---PF5---PF6---PF7---PF8---PF9---PF10--PF11--PF12---
      Help  Add   End         Save        Up    Down              NxtSt Menu
```

5. Enter name of the network to copy **to** in the To field. (If necessary, you can also enter a different owner and network in the From fields).
6. To open selection windows for networks, use an asterisk * as wildcard.

   **Note:**
   You cannot copy a network to an existing network.

7. Press Enter to copy the network and close the window.
8. The Network Modification window opens for the new network and you can immediately modify the definitions within the new network.
9. The new network also appears in the list on the Network Maintenance screen.

   **Notes:**

   1. If an alternate data file is defined in the Entire Operations Defaults (submenu of the System Services Menu), you can copy a network definition from there by setting the Alt.File field to **Y**.
   2. The alternate file must be an Entire Operations System File. The network definitions must be created in the current version of Entire Operations.

3. When you are copying from a secondary file or between different owners, all defined symbol tables are also copied, however only if they do not already exist in the target environment.

 Copyright © Software AG 2003

# Deleting a Job Network

**To delete a network**

1. Type **D** in the line command field of the selected network on the Network Maintenance screen.
2. Press Enter.
3. A window opens in which you can confirm the deletion by entering the network name.
4. Type in the network name and press Enter to delete the network.

**Notes:**

1. Deleting a network also deletes all definitions made for the network on lower levels in the Network and Job Maintenance facility.
   Only authorized users can issue the **D** line command.
2. Entire Operations saves the last run number of a deleted network.
   The first run of a new network under the same name receives the last run number incremented by 1.

# Displaying Overview of Job Flow within a Network

This function provides a short overview of the job flow within a network. The output can be sent to the screen or to the defined printer.

**To do so**

1. Enter **F** in the line command field of the appropriate network.
2. Press Enter.
3. A window opens at the bottom of the screen:

```
 20.11.01              *** Entire Operations 4.1.1 ***             10:41:17
 Owner SN                      Network Maintenance
 Selection OR________
-------------------------------------------------------------------------------
 Cmd #Run Owner      Network    Node Description
          *--------- *---------
 _        SN         A-EXAMPLE  148  GHH-1
 _     3  SN         A-1        146  Time Range Test
 _        SN         ABC1        53  Demo 11.04.91
 _        SN         ABC1-A      53  Demo 11.04.91
 _        SN         ABC3       148  Demo 11.04.91
 _        SN         ABC4       148  Demo 11.04.91
 _        SN         ABC5       148  Demo 11.04.91
 f        SN         ANYSTEP-1  148  RZ Test 29.06.92
 _        SN         ASF-SELS   146  test selection/deletion
 _        SN         BFF-1      148  BFF Test 27.11.91
 _        SN         BFF +-----------------------------------------------+
 ********************** !                                               !*****
  A Active C Copy D Dele !      Send Output to Printer ?  _ (Y/N)        !
  N Deact P Prose R Acti !                                               !y
 Command => ____________ +-----------------------------------------------+
Enter-PF1---PF2---PF3---PF4---PF5---PF6---PF7---PF8---PF9---PF10--PF11--PF12---
      Help  Add   End         Save        Up    Down              NxtSt Menu
```

4. You are asked Send Output to Printer?
5. If you enter **Y**, output is sent to the printer assigned to Natural Printer (1), as specified in your Natural profile parameters.
6. If you enter **N**, the Job Flow of the network appears on the screen, for example:

 Copyright © Software AG 2003

```
MORE
 20.11.01                  Entire Operations 4.1.1                    10:44:48
                Job Flow of Network DEMO-NET   Owner SN               Page    1

      Job       by Condition            from/to Job     Owner       Network
 ------------------------------------------------------------------------------
(1)   MESSAGE
        I       MESSAGE-OK
(2)   JOB1
        I       JOB1-OK
(3)   JOB2
        I       JOB2-OK
        +<----- JOB2-OK <-------------- (5)   RECOVER
(4)   JOB3
        I       LIBRARY FULL
        +-----> JOB3-OK --------------> (6)   JOB4
(5)   RECOVER
        +-----> JOB2-OK --------------> (4)   JOB3

..............................................................................
```

This function is also available from the Reporting Menu. See the section Reporting.

# Authorizing Other Users to Access a Network

**Note:**
Users grouped under the owner SYSDBA have unlimited access to all networks in the system. They do not need the authorization described in this subsection.

Entire Operations allows you to authorize users from other owners to access a network belonging to your owner.

**To do so**

1. Type **G** in the line command field of the selected network on the Network Maintenance screen.
2. Press Enter.
3. The following window opens in which you can enter the authorization:

```
 20.11.01              *** Entire +-----------------------------------------+
 Owner SN                      Ne !                                         !
 Selection OAR_______             !    Owner SN         Network DEMO-NET     !
--------------------------------- !                                         !-
 Cmd #Run Owner      Network    N !            Granting Definition           !
          *--------- *---------   !      ------------------------------      !
 _     3  SN         A-1        1 !      Cmd Type   Name        Option       !
 _     4  SN         BSGV-2     1 !       _  User_  GHH_______  O_____       !
 g    18  SN         DEMO-NET   1 !       _  Owner  SN________  O_____       !
 _     3  SN         EXCLUSIVE  1 !       _  _____  __________  ______       !
 _    12  SN         E02-IOC-01 1 !       _  _____  __________  ______       !
 _     8  SN         R   769478 1 !       _  _____  __________  ______       !
 _     1  SN         R-152930   1 !       _  _____  __________  ______       !
 _     3  SN         SN-2       1 !       _  _____  __________  ______       !
 _                                !       _  _____  __________  ______       !
 _                                !       _  _____  __________  ______       !
 _                                !       _  _____  __________  ______       !
 ******************************   !      ------------------------------      !*
  A Active C Copy D Delete F Flow !       D Delete                           !
  N Deact P Prose R Activate S Sc !                                          !
 Command => _____________________ ! Enter-PF1---PF3-----PF5-----PF7---PF8--- !
Enter-PF1---PF2---PF3---PF4---PF5 !       Help  End     Save    Up    Down   !-
      Help  Add   End         Sav +-----------------------------------------+
```

## Column Headings: Granting Definition

The input fields of the Granting Definition window are described in the following table:

 Copyright © Software AG 2003

| Field | Description | |
|---|---|---|
| Cmd | One-character line command input field. Possible option: | |
| | **D** | delete authorization |
| Type | Specifies the object to be authorized. Possible options: | |
| | Owner | All users linked to the Entire Operations owner specified in the Name field. |
| | User | One defined User. |
| | Simply type **O** for owner or **U** for user. | |
| Name | The user or owner to be authorized. If an owner, authorization is granted to all users linked to that owner. Enter an asterisk * and press Enter to display a selection list of all available users and owners. | |
| Option | Level of access granted. You can specify more than one option, for example RA for read and activate access. Possible options: | |
| | **R** | Read access to network (no maintenance). |
| | **W** | Read and write access (maintenance allowed except delete network). |
| | **D** | Read, write and delete access allowed. |
| | **O** | Like D, and authorized user ID can authorize other users. |
| | **A** | User can activate network. |

4. Type in the user ID or owner and the level of access to be granted.
5. Press PF5 (Save) to save the definition.
6. You can enter up to 30 different names and options. If current window is full, press PF8 (Down) to scroll forward to next window. Press PF7 (Up) to scroll back to previous window.
7. Press PF3 (Exit) to return to the Network Maintenance screen.
8. The network appears on the Network Maintenance screen when the authorized user logs on to Entire Operations.

   You can also use this function to delete existing authorizations.

# Checking for a Loop in a Job Network

If you type **H** in the line command input field for a network, Entire Operations runs a check of the links between the jobs.

- If a loop in the job flow is detected, the message appears:

  ```
  Definition Loop in xxx/yyy
  ```

  where:

  *xxx* is the name of the network tested for loops, and

  *yyy* is the name of the job in the network, in which a cyclic link was **first** detected.

  When a loop has been detected, a corresponding message is written to the Entire Operations Log.

- If no loop is detected, the message appears:

  ```
  No Loop in Network xxx
  ```

- If the network contains more than 1000 jobs and no loop has been detected in these first 1000 jobs, the message appears:

  ```
  Loop check limit 1000 exceeded. Loop check stops.
  ```

  Entire Operations does not perform a loop test on more than 1000 jobs.

  The following figure illustrates a loop within the job flow of a network.

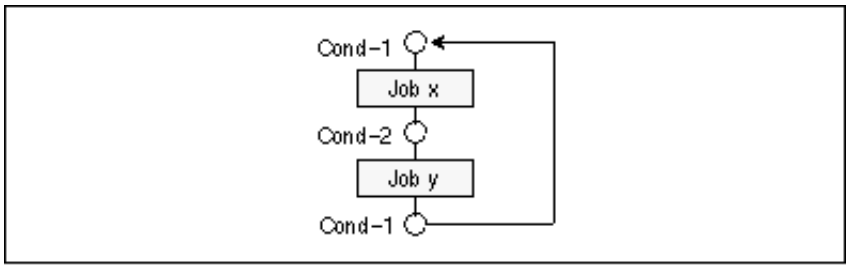


 Copyright © Software AG 2003

# Listing Jobs

**To list jobs defined for a network**

- Type **L** in the line command input field of the selected network on the Network Maintenance screen. Use this line command to maintain job definitions.

For more information, see the section Job Maintenance.

# Deactivating Active Jobs

**If you wish to prevent Entire Operations from submitting active jobs for a network**

1. Type the **N** line command in the line command field of the selected network.
2. Press Enter.
3. The following window opens with a list of run numbers for the selected network together with the activation date:

```
 20.11.01                *** Entire Operations 4.1.1 ***                10:46:46
 Owner SN                       Net +-----------------------------------------+
 Selection OAR_______               !                                         !
---------------------------------- !  Owner SN            Network DEMO-NET    !
 Cmd #Run Owner      Network    No !                                         !
          *--------- *---------    !  Please mark the run numbers, for which  !
 _     3  SN         A-1        14 !  active jobs are to be deactivated:      !
 _     4  SN         BSGV-2     14 !                                         !
 n    18  SN         DEMO-NET   14 !  Cmd   Run  Activation                  !
 _     3  SN         EXCLUSIVE  14 !   _    129  22.10.01 00:00 planned       !
 _    12  SN         E02-IOC-01 14 !   _    130  25.10.01 00:00 planned       !
 _     8  SN         R   769478 14 !   _    131  26.10.01 13:00 planned       !
 _     1  SN         R-152930   14 !   _    133  28.10.01 00:00 planned       !
 _     3  SN         SN-2       14 !   _    134  29.10.01 00:00 planned       !
 _                                 !   _    135  01.01.01 00:00 planned       !
 _                                 !                                         !
 _                                 !  PF3 End      PF7 Up  PF8 Down           !
 ******************************** B +-----------------------------------------+
  A Active C Copy D Delete F Flow G Grant H Check L List Jobs M Modify
  N Deact P Prose R Activate S Schedule T Acct W Display Schedule X History
 Command => ____________________________________________________________
Enter-PF1---PF2---PF3---PF4---PF5---PF6---PF7---PF8---PF9---PF10--PF11--PF12---
      Help  Add   End         Save        Up    Down              NxtSt Menu
```

**To deactivate an active network**

1. Mark the appropriate run number with any character.
2. Press Enter.

**Note:**
Deactivation is performed by the Entire Operations Monitor in the background. A slight delay could occur during this operation.

 Copyright © Software AG 2003

# Creating Online Documentation for a Network

You can add a brief description of a job network when defining a network in the Network Addition/Modification window (see Description field). This short description appears in the list of networks on the Network Maintenance screen.

If you wish to add more online documentation for a network, you can invoke the Entire Operations Editor from the Network Maintenance screen.

**To do so**

1. Type **P** in the line command field of the selected network.
2. Press Enter.
3. The Entire Operations Editor screen appears:

```
 Edit-PROSE Nw: E01-CONTI------------------------------------- Columns 001 072
 ====>                                                         SCROLL===> CSR
 ***** ****************************** top of data ******************************
 00001 Network 'E01-CONTI'
 00002 ------------------
 00003 This network consists of 6 independent jobs. Each of them forces
 00004 a defined event at end-of-job time. Each job executes the
 00005 program 'NOPCONTI' which resides on the installation library
 00006 'NOPnnn.LOAD'. The necessary JCL which is named 'NOPE*' is stored on
 00007 the installation library 'NOPnnn.SRCE'.
 00008
 00009 The prose for each job in this network contains a short description
 00010 to enable the user to define his own test examples.
 00011
 00012  Log Jobname           Event at End-of-job
 00013  -----------           -------------------
 00014
 00015  +---------+
 00016  ! E01-J01 !           Job ended ok.
 00017  +---------+
 00018       !
Enter-PF1---PF2---PF3---PF4---PF5---PF6---PF7---PF8---PF9---PF10--PF11--PF12---
      Help        End         Rfind Rchan Up    Down  Impo  Left  Right Curso
```

You can enter and edit text using Editor commands. For a detailed description of the Entire Operations Editor, see the Software AG Editor documentation.

Once a text is written, it can be read by any user who is authorized to access the network. The line command **P** entered for the network in the list of networks displays the current text.

You can also display or print online documentation in the Entire Operations Reporting facility (Reports option on the Main Menu - see the section Reporting).

You can also create online documentation at the job level (see the section Job Maintenance).

# Activating a Job Network Manually

The Entire Operations Monitor activates job networks automatically according to their defined schedules. However, it is also possible to activate a network manually from the Network Maintenance screen.

**To do this**

1. Type **R** in the line command field of the selected network.
2. Press Enter.
3. The following window opens in which you can change the activation date and specify forced (manual) activation:

```
 20.11.01               *** Entire Operations 4.1.1 ***               10:48:53
 Owner SN                      Network Maintenance
 Selection OAR_______
-------------------------------------------------------------------------------
 Cmd #Run Owner      Network    Node Description
          *------ +-------------------------------------------+
 _     3  SN      !                                           !
 _     4  SN      !          Network Activation               !
 r    18  SN      !                                           !
 _     3  SN      !                  Owner ==> SN             !
 _    12  SN      !                Network ==> DEMO-NET       !nts
 _     8  SN      !  Last Schedule Extract ==> 20.11.01       !
 _     1  SN      !                     at ==> 08:56:03       !
 _     3  SN      !    Last Execution Date ==> 20.11.01       !
 _                !        Last Run Number ==> 147            !
 _                !                                           !
 _                !   Use Time in Schedule ==> N  (Y/N)       !
 **************** !    or activate at Date ==> 20.11.01       !****************
  A Active C Copy !                   Time ==> 10:49:01       ! Modify
  N Deact P Prose !         JCL Check only ==> N  (Y/N)       !le X History
 Command => _____ !   Enter----PF1---PF3-----------------     !_________
Enter-PF1---PF2-- !   Activate Help  End                      !0--PF11--PF12---
      Help  Add   +-------------------------------------------+   NxtSt Menu
```

## Field Descriptions: Network Activation

The input fields of the Network Activation window are described in the following table:

 Copyright © Software AG 2003

| Field | Description | |
|---|---|---|
| Owner | Owner of network to be activated. | |
| Network | Network to be activated. | |
| Last Schedule Extract/at | Date and time of last automatic schedule extraction for this network by the Entire Operations Monitor. | |
| Last Execution Date | Date of last activation. | |
| Last Run Number | Run number of last activation. | |
| Use Time in Schedule | Enter Y (yes) here to activate the network within the defined time frames (Earliest Start, Latest Start, Deadline), even if the current date is not a scheduled date for this network. With this option, you can force the same time dependencies as if the network were scheduled and activated automatically. | |
| or activate at Date/Time | Shows the current date and time. You can modify date and time to force activation at any time on any date. There is no limitation for future date and time settings. | |
| JCL Check only | **Y** | Only a JCL check is performed for the job network or job.<br>OS/390, JES2: TYPRUN=SCAN<br>OS/390, JES3: EXEC PGM=JCLTEST<br>BS2000/OSD: /MODIFY-SDF-OPTIONS MODE=TEST<br>UNIX: Script execution with set -vn<br>Windows: Jobs are executed as ’Dummy due to JCL Check’.<br>An actual JCL check does not take place. The necessary commands are automatically inserted.<br>**Note:**<br>Active conditions set or reset by network execution for JCL check only do not interfere with active conditions of real active jobs or active networks. |
| | **N** | Normal submission. |

There are several situations in which you may wish to activate a job network manually (press Enter to activate the network):

- When no schedule has been defined for the network;
- When the same network is currently active;
- When the network is not scheduled for the current date;
- To reactivate a network.

Only authorized users can activate job networks manually. When a network is activated, all jobs within the network, except recovery jobs, are activated.

If a symbol needs to be entered in the symbol tables used in the network, this is done now. See Symbol Prompting during Manual Activation. See also Symbol Prompting in the section Symbols.

If the activation was successful, a Run number for the activated network will be returned in a message.

# Display Network Accounting Data

This subsection covers the following topics:

- Displaying Accounting Data for Jobs in a Selected Network
- Field Descriptions: Date / Run Number Selection
- Column Headings: Job Accounting Data
- Special PF Keys: Job Accounting Data

---

## Displaying Accounting Data for Jobs in a Selected Network

**To display accounting data for jobs in a selected network**

1. Type **T** in the line command field of the selected network.
2. Press Enter.
3. The following window opens in which you can specify dates, times and run numbers for the jobs:

```
 20.11.01               *** Entire Operations 4.1.1 ***              10:55:50
 Owner EXAMPLE                 Network Maintenance
 Selection OR________
-------------------------------------------------------------------------------
 Cmd #Run Owner      Network    Node Description
          *--------- E*--------
 _        EXAMPLE    E-910212   148  Demo Network 12.02.91
 t    10  EXAMPLE    E60-FLOW   148  DEMONSTRATION NETWORK
 _
 _
 _
 _
 _             +----------------------------------------------------+
 _             !                                                    !
 _             !  Owner EXAMPLE Network DEMO-NET                    !
 _             !             Date / Run Number Selection            !
 _             !                                                    !
 ************* !  From Date 20.11.01  00:00   to 20.11.01  10:59    !**********
  A Active C C !  From Run  1____             to 99999              !y
  N Deact P Pr !                                                    !istory
 Command => __ !  PF3  End                                          !___
Enter-PF1---PF +----------------------------------------------------+1--PF12---
      Help  Add   End         Save        Up    Down              NxtSt Menu
```

## Field Descriptions: Date / Run Number Selection

| Field | Description |
|---|---|
| From Date | Enter the date and time from which to display accounting data. |
| to | Enter the date and time until which to display accounting data. |
| From Run ... to | Enter the range of run numbers for which to display accounting data. |

 Copyright © Software AG 2003

- Enter dates, times and run numbers.
- Press Enter.
- The Job Accounting Data screen appears:

```
 20.11.01                *** Entire Operations 4.1.1 ***                11:32:21
 Owner  EXAMPLE                Job Accounting Data           Network E60-FLOW
-------------------------------------------------------------------------------
 Job         Run  JobId  Date      Start     Stop    Elapsed min CPU Time sec
 JOB-01       564  2057  10.11.01  13:14:05  13:15:06       1.01        0.02
 JOB-012      564  2060            13:15:36  13:17:36       2.00        0.01
 JOB-019      564  2061            13:15:40  13:17:40       2.00        0.01
 JOB-013      564  2066            13:18:02  13:20:03       2.01        0.01
 JOB-014      564  2074            13:20:29  13:22:30       2.01        0.01
 JOB-015      564                  13:22:57  13:22:57       0.01
 JOB-02       564  2082            13:23:00  13:24:02       1.03        0.02
 JOB-03       564                  13:24:27  13:24:27       0.01
 JOB-04       564  2086            13:24:29  13:26:30       2.01        0.01
 JOB-05       564                  13:26:53  13:26:53       0.01
 (Network)    564                  13:14:05  13:28:00      13.91        0.11
 JOB-06       564  2099            13:26:59  13:28:00       1.01        0.02

 JOB-01       566  2668  11.11.01  15:24:56  15:25:56       1.00        0.02
                                                         ----------  ----------
 Averages from 10.11.01 13:14 to 11.11.01 15:25 are         1.24        0.01
 ************************************ More ************************************
Enter-PF1---PF2---PF3---PF4---PF5---PF6---PF7---PF8---PF9---PF10--PF11--PF12---
                  End   Net               Up    Down
```

# Column Headings: Job Accounting Data

For explanation of the column headings on the Job Accounting Data screen, see the subsection Column Headings: Job Accounting Data.

# Special PF Keys: Job Accounting Data

You can perform the following function from the Job Accounting Data screen using this PF key:

| Key | Name | Function |
|---|---|---|
| PF4 | Net | Alternate display:<br>• Job and network data together (as in above example).<br>• Network data only. |

# Symbol Prompting during Manual Activation

This subsection covers the following topics:

- Overview
- Special PF Keys

## Overview

If any of the activated jobs are MAC-type jobs (dynamic JCL generation) or JOB-type jobs whose JCL contains symbols for variable values, these symbols are replaced by their current values during the manual activation, except those that are defined to be replaced at submission time.

If the activation is manual, and if the JCL of a job contains symbols that are defined to be prompted, you are prompted for the values to be used in this activation. For the symbols to be prompted, the following screen appears in which you can enter the values to be used, for example:

```
 20.11.01                *** Entire Operations 4.1.1 ***              16:08:36
 Owner    EXAMPLE        Symbol Prompting for Table EXAM-ST1
 Network  E62-NET                                Run 261   on 20.11.01 at 16:08
 ------------------------------------------------------------------------------
 C  Symbol                Value
 _  CLASS                 G_____________________________________________________
 _  JOBLIB                NOP.EXAMPLE.LOAD______________________________________
 _  MSGCLASS              X_____________________________________________________
 _  PARM-1                8888__________________________________________________
 _  STEPLIB               NOP.EXAMPLE.LOAD______________________________________
 _                        ______________________________________________________
 _                        ______________________________________________________
 _                        ______________________________________________________
 _                        ______________________________________________________
 _                        ______________________________________________________
 _                        ______________________________________________________
 _                        ______________________________________________________
 _                        ______________________________________________________
 _                        ______________________________________________________
 L  long value
 ********************************* Bottom of Data ******************************
Enter-PF1---PF2---PF3---PF4---PF5---PF6---PF7---PF8---PF9---PF10--PF11--PF12---
                             Accpt Cncl  Up    Down
```

## Special PF Keys

| Key | Name | Function |
|---|---|---|
| PF5 | Accept | Accept all symbols and continue with the activation.<br>If the list of prompted symbols exceeds one screen, please scroll to the end of the list with **PF8** first, before using **PF5**. |
| PF6 | Cancel | Cancel this activation. |

 Copyright © Software AG 2003

For further information, see the subsection Symbol Prompting in the section Symbols.

# Symbol Prompting User Routine

**To define your own routine for symbol prompting in this network**

- Press PF8 (SP-UR) from the Network Addition/Modification window.

  For a full description, see the subsection User-defined Symbol Prompting in the section Symbols.

 Copyright © Software AG 2003

# Scheduling

This section covers the following topics:

## Scheduling a Job Network

- General Scheduling Considerations
- Using Calendars
- Defining a Schedule for a Job Network
- Displaying Schedule for a Job Network
- Producing Network Start Summary
- Displaying Next Network Starts - Single Network
- Displaying Next Network Starts - System-Wide
- Displaying Network Execution History

## Scheduling a Job

- Scheduling a Job
- Defining Schedule Dependency for a Job
- Turn of the Year

# General Scheduling Considerations

This subsection covers the following topics:

- Optional Schedule Definition
- Schedule Extraction Times
- Manual and Automatic Activations on the same Day
- Influence of Deactivations on Schedules
- Imported Schedules

---

## Optional Schedule Definition

You need not define a schedule for a network. If no schedule is defined and all schedule definitions are left empty, the network is never activated automatically by the Entire Operations Monitor.

## Schedule Extraction Times

All network schedules are checked by the Monitor at least **once a day**, usually at midnight or after the first start of the Monitor on a new day. The networks with a schedule entry for the current day are activated. If no Earliest Start Time is defined, execution starts immediately after activation, depending on the earliest start time defined at job level.

## Manual and Automatic Activations on the same Day

A scheduled activation will **not** be rejected, if a manual or API activation of the same network has already been made for the same day.

## Influence of Deactivations on Schedules

The day of the activation is removed during a deactivation from the schedule only, if the planned activation was originated by a schedule extraction by the monitor.
The day of the activation is not removed from the schedule, if a manual activation is deactivated.

## Imported Schedules

If a schedule is imported by the import / export facility, a check for the **current day** in the schedule will be performed.
If the current day is a schedule day, it will be **excluded explicitly** from the schedule automatically.
If you want make the schedule active for the current day, you must remove this explicit exclusion definition from the schedule.

**Reason:**
The exclusion of the current day during import is done to prevent an unwanted automatic start of an imported job network by the NOP Monitor.

 Copyright © Software AG 2003

# Using Calendars

You need not use calendars when defining a schedule. If no calendar is specified, all days are treated as workdays.

If a calendar is specified, a schedule definition date is used only if it is a calendar workday. Networks are not activated on holidays. To activate a network on the workday **after** the holiday, mark the Monthly, Weekly or Explicit Date of the schedule definition with an **A**. To activate a network on the workday **before** the holiday mark the appropriate date with a **B**.

For more information on calendars, see the section Calendar Maintenance.

**Notes:**

1. The Monitor searches for the calendar under the network owner. If it does not find the calendar, the Monitor searches for it system-wide under SYSDBA.
2. Think ahead! Calendars are year-dependent. If a calendar cannot be found for the current year, the network is not scheduled and an error message is issued. **Be sure to define calendars for the coming year before they are needed!**
   From the month of November of the past year onwards, the Entire Operations Monitor issues warning messages to the log.

# Defining a Schedule for a Job Network

This section covers the following topics:

- Invoking Schedule Definition
- Defining Dates for a Network Schedule
- Schedule Modification and Planned Starts

## Invoking Schedule Definition

- Special PF Keys: Schedule Definition
- Field Descriptions: Schedule Definition

**To define a schedule for a network**

1. Type **S** in the line command field of the selected network on the Network Maintenance screen.
2. Press Enter.
3. The Schedule Definition screen appears:

```
 10.01.02              *** Entire Operations 4.1.1 ***              11:47:40
 Owner EXAMPLE                Schedule Definition
 Network E50-USRT
-------------------------------------------------------------------------------


    Schedule Type  ==> M                M Monthly   W Weekly   E Explicit Dates

    Calendar       ==> __________

    Earliest Start ==> ________    Schedule effective from => ________
    Latest Start   ==> ________  ___ days later
    Deadline       ==> ________  ___ days later

    Number of Activations ==> _____  every ==> _____ minutes

       or
    Activate at ==> _____ _____ _____ _____ _____
                    _____ _____ _____ _____ _____

 Command => ____________________________________________________________
Enter-PF1---PF2---PF3---PF4---PF5---PF6---PF7---PF8---PF9---PF10--PF11--PF12---
      Help        End         Save              Cal   Delet             Menu
```

4. Enter data for this screen as described below.

### Special PF Keys: Schedule Definition

You can perform the following function from the Schedule Definition screen using this PF key:

| Key | Name | Function |
|---|---|---|
| PF9 | Cal | Displays the calendar linked to this schedule (if defined). The calendar can be modified in Calendar Maintenance. |

 Copyright © Software AG 2003

## Field Descriptions: Schedule Definition

The input fields of the Schedule Definition screen are described below:

| Field | Description | |
|---|---|---|
| Schedule Type | Type of schedule. Enter one of the following options and press Enter to open the appropriate window: | |
| | **M** | Days of selected months. |
| | **W** | Weekdays of selected months. |
| | **E** | Explicit dates. |
| | When you first define the schedule, the value that appears here has the following meaning: | |
| | **-** | (no value) No data for the schedule are available. |
| | **M** | **Monthly** data are available for the schedule, and **explicit** data could also be available. |
| | **W** | **Weekly** data are available for the schedule, and **monthly** or **explicit** data could also be available. |
| | **E** | **Only explicit** data are available for the schedule. |
| Calendar | Enter the name of the calendar on which the schedule is based. To display a selection list of available calendars, type in an asterisk * and press Enter. Select a calendar from the list. See the subsection Using Calendars and the section Calendar Maintenance. | |
| Earliest Start | Enter the earliest start time for the network. No job in the network can start before this time. The Earliest Start Time is used to compute network schedule times. | |
| Latest Start | Enter the latest start time for the network. The first job in the network must start by this time, if possible. If not, a warning message is sent and the job is not submitted. | |
| Deadline | Enter the time by which the last job in the network must be finished. The Deadline is used to compute the earliest and latest start times for the jobs in the network. | |
| days later | You can use this field for Latest Start and Deadline to define a time span lasting longer than 24 hours. | |
| | **Note:**<br>If Latest Start or Deadline is before the Earliest Start and their "days later" fields are empty, the "days later" value of Earliest Start (or the following day, if necessary) is used for the Latest Start and Deadline "days later" fields. | |
| Schedule effective from | If the schedule should not become effective immediately, enter the time at which it should become effective. | |
| Number of Activations | This field should only be used, if the network is to be started more than once a day. In this case, please enter the number of activations per day.<br>If the network is to run once per schedule day only, leave this field blank.<br>999 Activations may be defined as a maximum. | |
| Every ... Minutes | If a network is to run more than once per day, you can enter the time interval between 2 subsequent network activations.<br>This field can be used without Number of Activations, too. In this case, the number of activations will be limited by the defined latest network start time.<br>Unit: minutes. | |

 Copyright © Software AG 2003

# Defining Dates for a Network Schedule

- Monthly Schedule
- Weekly Schedule
- Explicit Date Schedule

1. Enter a Schedule Type parameter (**M**, **W** or **E**).
2. Press Enter.
3. A window opens in which you can enter dates for the Schedule Type selected.

## Monthly Schedule

If you select type **M** (Days of a Month), you can specify months and days by entering numerical identifiers. Alternatively, you can specify AL for all months and LD for the last day of the month.

Below is an example of a schedule defined by days of the month:

```
 25.09.01               *** Entire Operations 4.1.1 ***              13:49:49
 Owner EXAMPLE                Schedule Definition
 Network E50-USRT
-------------------------------------------------------------------------------


    Schedule Type  ==> m                M Monthly   W Weekly   E Explicit Dates
  +-----------------------------------------------------------------------------+
  !                                                                             !
  !                       Monthly Schedule Definition                           !
  !                                                                             !
  !  Month List ==> _1  _4  _7  10  __  __  __  __  __  __  __  __             !
  !                                                                             !
  !  Day List   ==> 15A  LD_  ___  ___  ___  ___  ___  ___  ___  ___            !
  !             ==> ___  ___  ___  ___  ___  ___  ___  ___  ___  ___            !
  !             ==> ___  ___  ___  ___  ___  ___  ___  ___  ___  ___            !
  !                                                                             !
  !  PF1 Help   PF3 End                                                         !
  !                                                                             !
  +-----------------------------------------------------------------------------+
 Command => ____________________________________________________________
Enter-PF1---PF2---PF3---PF4---PF5---PF6---PF7---PF8---PF9---PF10--PF11--PF12---
      Help        End         Save              Cal   Delet             Menu
```

The network with this schedule is activated every fifteenth and last working day of the months January, April, July and October of the year.

The days entered here are correlated with the list of months. A day can be followed by a letter with a special meaning:

| | | | |
|---|---|---|---|
| **A** | next workday, if holiday | **V** | workday of month, counted backwards from end of month |
| **B** | previous workday, if holiday | **W** | workday of month |

### Examples:

| Column | Description |
|---|---|
| 25 | The 25th day of the given month. |
| 10W | The 10th workday of the month. |
| 1V | The last workday of the month. |
| LDA | The last day of the month; next workday if this is a holiday. |

**Note:**
The combinations LDV and LDW are not allowed.

## Weekly Schedule

If you select type **W** (Days of a Week), you can specify months by entering numerical identifiers (01-12) and days of the week by marking them with any character. Alternatively, you can specify AL for all months.

Below is an example of a schedule defined by days of the week:

```
 25.09.01               *** Entire Operations 4.1.1 ***              14:08:42
 Owner EXAMPLE                Schedule Definition
 Network E50-USRT
-------------------------------------------------------------------------------


   Schedule Type  ==> w                M Monthly   W Weekly   E Explicit Dates
  +-----------------------------------------------------------------------+
  !                                                                       !
  !                        Weekly Schedule Definition                     !
  !                                                                       !
  !     Month List  ==> AL  __  __  __  __  __  __  __  __  __  __  __    !
  !                                                                       !
  !     Week Days   ==> 1A __ __ __ __ __ 4B                              !
  !                                                                       !
  !                     1 Mo 2 Tu 3 We 4 Th 5 Fr 6 Sa 7 Su                !
  !     PF3 End                                                           !
  +-----------------------------------------------------------------------+
                    _____ _____ _____ _____ _____

 Command => ____________________________________________________________
Enter-PF1---PF2---PF3---PF4---PF5---PF6---PF7---PF8---PF9---PF10--PF11--PF12---
      Help        End         Save              Cal   Delet             Menu
```

The network with this schedule is activated every Monday and Thursday of every month of the year. The days entered here are correlated with the list of months. Each combination of month and weekday is a schedule date. 1 is Monday, 2 is Tuesday, and so on.

A weekday can be followed by a letter with a special meaning:

| | | | |
|---|---|---|---|
| **A** | next workday, if holiday | **V** | workday of week, counted backwards from end of week |
| **B** | previous workday, if holiday | **X** | (field can also be left **blank**) the given weekday, even if it is a holiday |
| **W** | workday of week, e.g.: **1W** | | |

 Copyright © Software AG 2003

### Examples:

| Column | Description |
|---|---|
| 1 | Monday. |
| 1A | Monday, but the next workday, if Monday is a holiday. |
| 2V | The second-last workday of the week. |

## Explicit Date Schedule

If you select type **E** (Explicit Dates), you can specify dates in the same format as in the headings section of the screen (top left corner).

Below is an example of a schedule defined by explicit dates:

```
 25.09.01               *** Entire Operations 4.1.1 ***              14:17:40
 Owner EXAMPLE                Schedule Definition
 Network E50-USRT
-------------------------------------------------------------------------------


    Schedule Type  ==> e                M Monthly   W Weekly   E Explicit Dates
  +-----------------------------------------------------------------------------+
  !                                                                             !
  !                     Explicit Dates Schedule Definition                      !
  !                                                                             !
  !  17.06.02- 23.12.02- _________ _________ _________ _________ _________     !
  !  _________ _________ _________ _________ _________ _________ _________     !
  !  _________ _________ _________ _________ _________ _________ _________     !
  !  _________ _________ _________ _________ _________ _________ _________     !
  !                                                                             !
  !  PF3 End                                                                    !
  !                                                                             !
  !                  _____ _____ _____ _____ _____                              !
  +-----------------------------------------------------------------------------+
  Command => ____________________________________________________________
Enter-PF1---PF2---PF3---PF4---PF5---PF6---PF7---PF8---PF9---PF10--PF11--PF12---
      Help        End         Save              Cal   Delet             Menu
```

The network with this schedule will be activated on the 17th of June and the 23rd of December 2002, without a calendar check. The date can be followed by an **A** or a **B** to enable execution on the workday before (**B**) or after (**A**) a holiday in the Calendar entered on the Schedule Definition screen.

You can also use the explicit date schedule to prevent the activation of the network on a particular date. For example, if you have scheduled the network for every Thursday of every month but do not wish the network to run on Thursday, the 23rd of December:

1. Enter the date here followed by a minus sign (23.12.02-).
2. Press Enter to save the date specification.
3. Press PF3 (Exit) to close the window.
4. Press PF5 (Save) to save the schedule and PF3 (Exit) to return to the Network Maintenance screen.

**Note:**
If you define a **past date** as an explicit date, a warning message appears.

# Schedule Modification and Planned Starts

- Special PF Keys: Planned Starts
- Cancelling Planned Starts
- Keeping Planned Starts

In the Entire Operations Defaults the system administrator can define that network schedules are to be extracted several days before the network start. These planned starts are represented by activation trigger records, which already have a run number.

If your schedule modification affects any planned start, you have the option of cancelling the starts or keeping them active. The following window opens:

```
 25.09.01               *** Entire Operations 4.1.1 ***               10:58:28
 Owner EXAMPLE                Schedule Definition
  +---------------------------------------------------+
- !                                                   !------------------------
  !       Owner EXAMPLE     Network E50-USRT           !
  !                                                   !
  !   The following planned starts would be           !eekly   E Explicit Dates
  !   cancelled due to your schedule modification:    !
  !                                                   !
  !            Date     Time          Run             !
  !            17.11.02 10:32         142             !
  !                                                   !
  !                                                   !
  !                                                   !
  !                                                   !
  !                                                   !
  !                                                   !
  !                                                   !
  !                                                   !
  !                                                   !
  !  ---------------------------------------------    !_________________
E !  PF5 Cancel   PF6 Do not cancel                   !F9---PF10--PF11--PF12---
  +---------------------------------------------------+al               Menu
```

## Special PF Keys: Planned Starts

You can perform the following functions from the Planned Starts window using these PF keys:

| Key | Name | Function |
|---|---|---|
| PF5 | Cancel | Cancels starts listed. A confirmation window opens for each start to be cancelled. |
| PF6 | Do not cancel | Keeps all listed starts active, regardless of your schedule modification. |

## Cancelling Planned Starts

**To cancel one or more of the planned starts listed**

- Press PF5 (Cancel).

  A confirmation window opens for each start to be cancelled:

 Copyright © Software AG 2003

```
 25.09.01               *** Entire Operations 4.1.1 ***               10:58:28
 Owner EXAMPLE                Schedule Definition
  +---------------------------------------------------+
- !                                                   !------------------------
  !       Owner EXAMPLE     Network E50-USRT           !
  !                                                   !
  !   The following planned starts would be           !eekly   E Explicit Dates
  !   cancelled due to your schedule modification:    !
  !                                                   !
  !            +-----------------------------------------------+
  !            !                                               !
  !            !  Please confirm                               !
  !            !  Start Cancel of E50-USRT (142)               !
  !            !  by entering E50-USRT                         !
  !            !          ==> ______________________________   !
  !            !  PF3 End                                      !
  !            +-----------------------------------------------+
  !                                                   !
  !                                                   !
  !                                                   !
  !  ---------------------------------------------    !_________________
E !  PF5 Cancel   PF6 Do not cancel                    !F9---PF10--PF11--PF12---
  +---------------------------------------------------+al               Menu
```

## Keeping Planned Starts

**To keep all listed starts active, regardless of schedule modifications you have made**

- Press PF6 (Do not cancel).

# Displaying Schedule for a Job Network

**To display a defined schedule in calendar format for a network**

1. Type **W** in the line command field of the selected network
2. Press Enter.
3. A window opens showing the current half of the year in calendar format. The dates on which the network is to be activated appear on the schedule:

```
25.09.01                *** Entire Operations 4.1.1 ***                14:57:58
Owner EXAMPLE             Schedule E50-USRT   Year 2001

                 January                February               March
Monday       1  8 15 22 29            5 12 19 26            5 12 19 26
Tuesday      2  9 16 23 30            6 13 20 27            6 13 20 27
Wednesday    3 10 17 24 31            7 14 21 28            7 14 21 28
Thursday     4 11 18 25            1  8 15 22            1  8 15 22 29
Friday       5 12 19 26            2  9 16 23            2  9 16 23 30
Saturday     .  .  .  .            .  .  .  .            .  .  .  .  .
Sunday       .  .  .  .            .  .  .  .            .  .  .  .

                 April                  May                    June
Monday           2  9 16 23 30          7 14 21 28            4 11 18 25
Tuesday          3 10 17 24          1  8 15 22 29            5 12 19 26
Wednesday        4 11 18 25          2  9 16 23 30            6 13 20 27
Thursday         5 12 19 26          3 10 17 24 31            7 14 21 28
Friday           6 13 20 27          4 11 18 25            1  8 15 22 29
Saturday         .  .  .  .          .  .  .  .            .  .  .  .  .
Sunday       .  .  .  .  .          .  .  .  .            .  .  .  .

Enter-PF1---PF2---PF3---PF4---PF5---PF6---PF7---PF8---PF9---PF10--PF11--PF12---
      Help        End   Overv             Up    Down  Calen Histo NxtSt
```

The network based on this schedule is activated every weekday from January to June except on Saturday and Sunday.

You can enter any valid year in the Year field in the header section of the screen to display the schedule for the specified year.

Press PF8 (Down) to display the next half-year and PF7 (Up) to display the previous half-year. You can also use these PF keys to display the previous or following year.

If a calendar is linked to the schedule, but not defined for the displayed year, you are notified by an error message.

**Note:**
There are two different formats for all schedule and calendar displays. The format can be modified in the Entire Operations Defaults submenu of the System Services Menu.

## Special PF Keys: Schedule

You can perform the following functions from the Schedule screen using these PF keys:

 Copyright © Software AG 2003

| Key | Name | Function |
|---|---|---|
| PF4 | Overv | Produces Network Start Summary for a given date. See also Network Activation Summary in the section Reporting. |
| | **Note:** | (Only if your Natural online system runs under OS/390)<br>Before you press this key, place cursor on a valid date. |
| PF9 | Calen | Display Calendar<br>Displays the calendar linked to this schedule (if defined). The calendar can be modified in Calendar Maintenance. |
| PF10 | Histo | Execution History<br>Displays the previous execution dates of the network. |
| PF11 | NxtSt | Next Starts<br>Displays the next ten network and job activations for the network and whether they are scheduled or manual activations. |

# Producing Network Start Summary

**To produce the Network Start Summary for the current network**

1. Press PF4 (Overv) on the Schedule screen of the appropriate network.
2. The following windows open:

```
 25.09.01             +-------------------------------------------------+1:16
 Owner EXAMPLE        !                                                 !
                      !             Network Start Summary               !
                 Janu !                                                 !
 Monday        1  8 15 !  Owner EXAMPLE Network E50-USRT                !
 Tuesday       2  9 16 +-------------------------------------------------+
 Wednesday     3 10 17 24 31           7 14 21 28           7 14 21 28
 Thursday      4 11 18 25           1  8 15 22           1  8 15 22 29
 Friday        5 12 19 26           2  9 16 23           2  9 16 23 30
 Saturday      .  .  .  .           .  .  .  .           .  .  .  .  .
 Sunday        .  .  .  .           .  .  .  .           .  .  .  .
                 April                  May                  June
 Monday          2  9 16 23 30          7 14 21 28           4 11 18 25
 Tuesday         3 10 17 24          1  8 15 22 29           5 12 19 26
 Wednesday       4 11 18 25          2  9 16 23 30           6 13 20 27
 Thursday        5 12 19 26 +-----------------------------------------------+
 Friday          6 13 20 27 !                                               !
 Saturday        .  .  .  . !      Send Output to Printer ?  N (Y/N)        !
 Sunday        .  .  .  .  . !                                               !
                             +-----------------------------------------------+
Enter-PF1---PF2---PF3---PF4---PF5---PF6---PF7---PF8---PF9---PF10--PF11--PF12---
      Help        End   Overv             Up    Down  Calen Histo NxtSt
```

3. In the window at the bottom of the screen you are asked Send Output to Printer?
4. If you enter **Y** and press Enter, output is printed on the printer assigned to Workfile 1. If you enter **N** and press Enter, the Network Start Summary screen appears, for example:

```
MORE
 25.09.01                 Entire Operations 4.1.1                    14:21:46
                    Network Start Summary for 25.09.01               Page    1
 ---------------------------------------------------------------------------
 EXAMPLE    E50-USRT

 ---------------------          Aw. Symbol prompting
 ( 237) 15.09 00:00             Symbol prompting request to EXAMPLE
        15.09 00:00             ***** End of Report *****
```

5. Press PF3 (End) to return to the Schedule screen.

If you want to produce a Network Start Summary for **all** network activations on a given day, see the subsection Network Activation Summary in the section Reporting.

 Copyright © Software AG 2003

# Displaying Next Network Starts - Single Network

This subsection covers the following topics:

- Displaying the Next Network and Job Starts
- Starting a Job Network Manually
- Symbol Prompting
- Modifying an Active Symbol Table

---

## Displaying the Next Network and Job Starts

- Column Headings: Next Starts
- Special PF Keys: Next Starts
- Line Commands: Next Starts

**To display the next ten network and job starts for a network**

- Press PF11 (NxtSt) on the Schedule screen.

  The following window opens:

```
 25.09.01               *** Entire Operations 4.1.1 ***               15:25:17
 Owner EXAMPLE            Schedule E60-FLOW   Year 2000     Calendar EXAMPLECAL
              +-------------------------------------------------------------+
              !                                                             !
 Monday       !            Owner EXAMPLE     Network E60-FLOW              !
 Tuesday      !            Next Start Times                                !
 Wednesday    !                                                            !
 Thursday     !  Cmd  Date     Act.  Start   Run Type                      !
 Friday       !       02-02-17 00:00 00:00       Schedule Table            !
 Saturday     !       02-02-18 00:00 00:00       Schedule Table            !
 Sunday       !       02-02-22 00:00 00:00       Schedule Table            !
              !       02-02-24 00:00 00:00       Schedule Table            !
              !       02-02-25 00:00 00:00       Schedule Table            !
 Monday       !       02-02-29 00:00 00:00       Schedule Table            !
 Tuesday      !       02-03-01 00:00 00:00       Schedule Table            !
 Wednesday    !       02-03-02 00:00 00:00       Schedule Table            !
 Thursday     !       02-03-03 00:00 00:00       Schedule Table            !
 Friday       !       02-03-07 00:00 00:00       Schedule Table            !
 Saturday     !  -------------------- Bottom of Data --------------------  !
 Sunday       !  D Delete   M Start Time   S Active Symbols                !
              !  PF1 Help  PF2 Add  PF3 End  PF7 Up  PF8 Down              !
Enter-PF1---P +-------------------------------------------------------------+ --
      Help        End   Overv             Up    Down  Calen Histo NxtSt
```

  This window displays a list of planned activations for **one network only**.

  The Type column displays the activation type (scheduled, manual). You can delete manual activations with the **D** (delete) line command. Scheduled activations can only be changed by modifying the schedule definition.

**Note:**
To display a **system-wide** list of planned activations, press PF11 (NxtSt) from the Network Maintenance or Active Networks screens. For further information, see Displaying Next Network Starts - System-Wide.

## Column Headings: Next Starts

The following table explains the column headings for the data listed in the Next Starts window:

| Column | Description |
|---|---|
| Cmd | One-character input field for line commands. Possible values are listed in the command section of the screen (see also the subsection Line Commands below). |
| Date | Date of planned network start. |
| Act. | Time of planned network start. |
| Start | Time of planned start of network in its operating system. |
| Run | Run number for this activation. |
| Type | Displays the current status of the activation. Possible types are:<br>• Schedule Table,<br>• on request,<br>• Schedule,<br>• active,<br>• Aw. Symbol Prompting,<br>• Symbol Entry in Progress. |

## Special PF Keys: Next Starts

You can perform the following functions from the Next Starts window using these PF keys:

| Key | Name | Function |
|---|---|---|
| PF2 | Add | Activates a network manually. |

**Note:**
This function is not available under Natural 2.1. In this case, return to the Network Maintenance screen and enter the **R** line command to activate the network manually. See the subsection Activating a Job Network Manually in the section Network Maintenance.

## Line Commands: Next Starts

Use the following line commands to perform the described functions on any network activation listed in the Next Starts window:

 Copyright © Software AG 2003

| Cmd | Description | |
|---|---|---|
| D | Cancels the planned network start. | |
| M | Modify the start time of a planned network start. | |
| S | When you enter this command for a network **whose Type is:** | **... you can ... :** |
| | Schedule, active | ... modify the active symbols in the Active Symbol Table(s) of the network. |
| | Awaiting Symbol Prompting | ... perform symbol prompting for this planned start. |

# Starting a Job Network Manually

**To start a network manually**

1. Press PF2 (Add) from the Next Starts window.
2. The Network Start window opens.

For more information, see the subsection Activating a Job Network Manually in the section Network Maintenance.

# Symbol Prompting

**To perform symbol prompting for a planned start**

1. Enter **S** in the line command field of the appropriate job or network with Type = Aw. Symbol Prompting.
2. Press Enter.
3. The Symbol Prompting screen appears.

For further information, see the subsection Symbol Prompting.

# Modifying an Active Symbol Table

- Field Descriptions
- Special PF Keys

**To modify the active symbols in a network's Active Symbol Table(s)**

1. Enter **S** in the line command field of the appropriate job or network with Type = Schedule, active.
2. Press Enter.
3. The Active Symbol Tables window opens:

```
 25.09.01               *** Entire Operations 4.1.1 ***               15:01:54
 Owner EXAMPLE            Schedule DEMO-NET   Year 2001     Calendar DEMOCAL
              +-------------------------------------------------+----------+
              !                                                 !          !
 Monday       !  Owner EXAMPLE    Network DEMO-NET   Run 136    !          !
 Tuesday      !               Active Symbol Tables              !          !
 Wednesday    !                                                 !          !
 Thursday     !       Cmd Table            Cmd Table            !          !
 Friday       !        _  SN-01             _                   !ting      !
 Saturday     !        _  DEMO              _                   !ting      !
 Sunday       !        _                    _                   !ting      !
              !        _                    _                   !ting      !
              !        _                    _                   !ting      !
 Monday       !        _                    _                   !ting      !
 Tuesday      !        _                    _                   !          !
 Wednesday    !        _                    _                   !Progress  !
 Thursday     !        _                    _                   !ting      !
 Friday       !        _                    _                   !          !
 Saturday     !                                                 !--------  !
 Sunday       !  Select Symbol Table by marking.                !          !
              !  PF3 End                                        !          !
Enter-PF1---P +-------------------------------------------------+----------+---
      Help        End   Overv             Up    Down  Calen Histo NxtSt
```

4. Mark the appropriate symbol table with any character.
5. Press Enter.
6. The Active Symbol Table screen appears:

```
 25.09.01               *** Entire Operations 4.1.1 ***               15:02:44
 Owner   EXAMPLE         Active Symbol Table SN-01
 Network DEMO-NET                                                     Run 136
 ---------------------------------------------------------------------------
 C Symbol            F P Value                       modified by
 _ A1                A N 'HUGO'                      SN       07.12.00 14:09
 _ A2                A N '''QUOTED'''                SN       07.12.00 14:10
 _ A3                A E 'XXX   '                    SN       26.03.01 15:33
 _ A4                A E ' '                         SN       22.04.01 15:42
 _ A5                A E AAA                         SN       27.04.01 11:28
 _ A6                N A 777                         SN       17.05.01 10:25
 _ A7                A E PROMPTED AT 14:25           SN       20.05.01 14:20
 _ A8                A E DFFDDFFD                    SN       20.05.01 14:20
 _ CLASS             A A G                           SN1      22.05.01 11:45
 _ CLASS-PRIV        A E *** empty ***               SN1      22.05.01 11:42
 _ DATE              D A 20010818                    SN       18.08.01 15:19
 _ EMPTY             A E YYYYYYYYY                   SN       11.09.01 11:31
 _ HUGO              A E A VERY LONG STRING TO TEST S SN      22.10.01 10:31
 _ JOBLIB            A E NOP.DEV.LOAD                SN       18.11.01 14:21
 ********************************** More ************************************
 D Delete  M Modify
Enter-PF1---PF2---PF3---PF4---PF5---PF6---PF7---PF8---PF9---PF10--PF11--PF12---
      Help  Add   End         Save        Up    Down        Print
```

7. Enter **M** in the line command field of the appropriate symbol.
8. Press Enter.
9. The Active Symbol Modification window opens for the symbol selected.
   This window is identical to the Master Symbol Addition window in the section Symbols and allows you to modify the symbol value.
10. Modify the symbol(s) as desired.
11. Press PF5 (Save) to save the modified active symbol table.

 Copyright © Software AG 2003

12. Press PF3 (End) **twice** to close the Active Symbol Modification window and return to the Next Activations window.

## Field Descriptions

For field descriptions, see Field Descriptions: Master Symbol Addition in the section Symbols.

## Special PF Keys

For a description of PF key functions, see Special PF Keys: Master Symbol Addition in the section Symbols.

# Displaying Next Network Starts - System-Wide

This subsection covers the following topics:

- Next Planned Network Starts
- Modify Planned Network Start Time

---

## Next Planned Network Starts

- Column Headings
- Line Commands

**To display a system-wide list of all planned job and network starts**

- Press PF11 (NxtSt) from the Schedule or Active Networks screens.

  The following screen appears:

```
31.01.02              *** Entire Operations 4.1.1 ***              15:49:49
                        Next scheduled Network Starts
 ------------------------------------------------------------------------------
 C Owner      Network    Job        Date     Start   Run Type
   *---------                       31.01.02 15:49
 _ REQUEST    R351635A              31.01.02 17:50  1557 Schedule, active
 _ REQUEST    R351635A              31.01.02 18:00  1558 Schedule, active
 _                                                       *** End Extraction ***
 _ REQUEST    R354153A              16.02.02 14:50  2127 Schedule, active
 _ REQUEST    R354153A              17.02.02 14:50  2128 Schedule, active
 _ SN         RZF-02                28.08.02 16:40   226 Symbol Entry in Progre
 _ GFR        HUGO-2                29.08.02 00:00   512 Activation in Progress
 _ SN         RZF-02                29.08.02 16:40   227 Aw. Symbol Prompting
 _ GFR        HUGO-2                30.08.02 00:00   513 Activation in Progress
 _ GFR        ZEITR                 30.08.02 00:00   167 Aw. Symbol Prompting
 _ SN         RZF-02                30.08.02 16:40   228 Aw. Symbol Prompting
 _ EXAMPLE    E01-CONTI             01.09.02 00:00   359 Schedule, active
 _ SN         R-158004              01.09.02 00:00   335 Schedule, active
 ********************************** m o r e ********************************
 D Delete   M Start Time   S Active Symbols
 Command => ____________________________________________________________
Enter-PF1---PF2---PF3---PF4---PF5---PF6---PF7---PF8---PF9---PF10--PF11--PF12---
      Help        End                     Up    Down                    Menu
```

This screen displays a chronological list of all planned network or job starts, both scheduled and manual.

**Scheduled** starts are extracted from the network schedules and put into a pre-activation status. The extraction is usually performed at midnight, one day in advance.

**Manual** starts are explicitly invoked as manual activations by any user.
If a special start time was not entered, the daily time frame is used. See the subsection Activating a Job Network Manually in the section Network Maintenance.

 Copyright © Software AG 2003

## Column Headings

The following table explains the column headings for the data listed on the Next Scheduled Network Starts screen:

| Column | Description |
|---|---|
| C | One-character input field for line commands. Possible values are listed in the command section of the screen (see also the subsection Line Commands below). |
| Owner | Owner of the network to be activated.<br>Above this column, you can make an owner preselection. If this field contains *, all activations will be displayed. |
| Network | Network to be activated. |
| Job | If the network contains only one job, the job name also appears in this column. |
| You can enter a starting date and/or time in the fields immediately below the Date and Start columns to display only those activations due to start after that time. | |
| Date | Date of activation. |
| Start | Starting time of activation. |
| Run | Run number for this activation. |
| Type | Displays the current status of the activation. Possible types are:<br>● Schedule Table,<br>● on request,<br>● Schedule,<br>● active,<br>● Aw. Symbol Prompting,<br>● Symbol Entry in Progress. |

## Line Commands

Use the following line commands to perform the described functions on any network start listed on the Next Scheduled and Manual Network Starts screen:

| Cmd | Description | |
|---|---|---|
| D | Cancel the planned network start. | |
| M | Modify Planned Network Start Time. | |
| S | When you enter this command for a network **whose Type is ...** | **You can ...** |
| | Schedule, active | ... modify the active symbols in the network's Active Symbol Table(s). |
| | Awaiting Symbol Prompting | ... perform the symbol prompting for this planned activation. |

# Modify Planned Network Start Time

**To modify the start time of a planned network activation**

1. Enter **M** in the line command field of the appropriate network.
2. Press Enter.
3. The Start Time Modification window opens:

```
 20.09.01               *** Entire Operations 3.2.1 ***              16:49:13
                  Next scheduled and manual Network Starts
 ---------------------------------------------------------------------------
 C Owner      Network    Job        Date     Start   Run Type
                                    20.11.01 16:49
 _ SN         A-1                   20.11.01 17:00   759 Aw. Symbol Prompting
 _ SN         A-2   +-------------------------------------------+  Prompting
 _ SN         A-EXA !                                           !  Prompting
 _ REQUEST    SUEDM !      Start Time Modification              ! active
 _ SN         BS2-E !                                           ! active
 _ SN         SYMFC !    Owner     ==> EXAMPLE                  ! active
 _ HBU        MONTE !    Network   ==> E40-REC-01               ! active
 _ SML        SMLBE !    Job       ==> -                        ! active
 _ DQA        QAC02 !    Run       ==> 1036                     ! active
 _ GFR        NW-17 !                                           !  Prompting
 m EXAMPLE    E40-R !  Start                                    ! active
 _ EXAMPLE    E20-D !    planned   ==> 18.11.01  14:00          ! active
 _ EXAMPLE    E40-R !    new       ==> 18.11.01  14:00          ! active
 ****************** !                                           ! ************
 D Delete   M Start !  -PF1------PF3------PF5---------          !
 Command => _______ !   Help     End      Save                  ! _____
Enter-PF1---PF2---P +-------------------------------------------+ F11--PF12---
      Help        End                      Up    Down                  Menu
```

4. You can enter a new date and start time, but they must be greater than or equal to the current values.

   **Note:**
   A start time up to the current time plus **activation before earliest start** causes an immediate activation of the jobs of the network.

5. Press PF5 (Save) to save the new start time.
6. Press PF3 (End) to return to the Next Scheduled and Manual Network Starts screen.

 Copyright © Software AG 2003

# Displaying Network Execution History

This subsection covers the following topics:

- What Is an Execution History?
- Invoking an Execution History
- Execution History for a Particular Day

## What Is an Execution History?

The execution history is a record of past schedules. It shows the days on which the network was actually scheduled. The data on the History screen cannot be modified.

There are history dates for the current and for the two preceding years (provided the network already existed at that time).

## Invoking an Execution History

**To display the execution history**

1. Type **X** in the line command field of the selected network. Press Enter.

   The display is in calendar format starting with the current half year. The dates on which the network ran appear on the history:

```
25.09.01                *** Entire Operations 4.1.1 ***                11:06:21
Owner EXAMPLE             History  DEMO-NET   Year 2001     Calendar DEMOCAL


                 January              February             March
Monday        .  8  .  .  .           .  . 19  .           .  .  .  .
Tuesday       .  . 16  .  .           .  .  .  .           .  .  .  .
Wednesday     .  .  .  .  .           .  .  .  .           .  .  .  .
Thursday      . 11 18  .           .  . 15  .           1  .  .  .  .
Friday        . 12 19  .           .  . 16  .           2  .  .  .  .
Saturday      .  .  .  .           .  .  .  .           .  .  .  .  .
Sunday        .  .  .  .           .  .  .  .           .  .  .  .


                 April                May                  June
Monday           .  .  .  .  .        .  .  .  .           .  .  .  .
Tuesday          .  .  .  .        .  .  .  .  .           .  .  .  .
Wednesday        .  .  .  .        .  .  .  .  .           .  .  .  .
Thursday         .  .  .  .        .  .  .  .  .           .  .  .  .
Friday           .  .  .  .        .  .  .  .           .  .  .  .  .
Saturday         .  .  .  .        .  .  .  .           .  .  .  .  .
Sunday        .  .  .  .  .        .  .  .  .           .  .  .  .


Enter-PF1---PF2---PF3---PF4---PF5---PF6---PF7---PF8---PF9---PF10--PF11--PF12---
      Help        End   Day               Up    Down
```

   You can enter any valid year in the Year field in the header section of the screen to display the execution history for the specified year.

2. Press PF8 (Down) to display the next half-year and PF7 (Up) to display the previous half-year. You can also use these PF keys to change to the previous or following year.

   If no history data exist for a given year, an error message is issued.

# Execution History for a Particular Day

- Column Headings: Network Start History

**To display more information for a particular day**

- **If Entire Operations runs online under OS/390:**
  Place the cursor on the appropriate day and press PF4 (Day).
- **Else:**
  Press PF4 (Day). A window opens.
  Enter the appropriate day and press Enter.

A screen appears with the detailed execution history for one day:

```
 20.11.01                *** Entire Operations 4.1.1 ***                11:07:06
 Owner  EXAMPLE              Network Start History            Network DEMO-NET
                                                                 Date 18.11.01
-------------------------------------------------------------------------------
     Run Job        Date     Time            Run Job        Date     Time
     120 (Network)  11.11.01 08:54:43
     121 (Network)  12.11.01 09:50:27
     123 (Network)  18.11.01 10:50:00
```

This screen displays all starts of a network for a selected date with run numbers and start times. Single job starts contain the job name.
When a whole network was activated, <Network> appears.

## Column Headings: Network Start History

The following table explains the column headings for the data listed on the Network Start History screen:

| Column | Description |
|---|---|
| Run | Run number of this start. |
| Job | Job name, if this is a single-job start. |
| Date | Date of the network start. |
| Time | Starting time of the network start. |

 Copyright © Software AG 2003

# Scheduling a Job

This subsection covers the following topics:

- Defining Scheduling Parameters at the Job Level
- Time Frames
- Field Descriptions: Scheduling Parameters
- Special PF Keys: Scheduling Parameters
- Sending a Late Message to One or More Users
- Job Accounting Data
- Field Descriptions: Date / Run Number Selection
- Column Headings: Job Accounting Data

---

## Defining Scheduling Parameters at the Job Level

**To define scheduling parameters at the job level**

1. Type **S** in the line command input field of the selected job in the Job Maintenance screen.
2. Press Enter.

   The Scheduling Parameters window opens:

```
 15.11.01               *** Entire Operations 4.1.1 ***               09:53:18
 Owner REQUEST                   Job Maintenance              Network P-126551N2
  +-----------------------------------------------------------------------+ -
  !                                                                       ! r
  !                           Scheduling Parameters                       !
  !  Job J-2                                                              !
  !                                                                       !
  !                                                                       !
  !  Estimated Elapsed Time ==> _________ Min.    Average ==>      0.03    !
  !  History Elapsed Time   ==>      0.03      0.03      0.03      0.03    !
  !                                  0.03      0.03      0.03      0.03    !
  !                                                                       !
  !  Earliest Start Time    ==> 11:00:00  ___ days later                  !
  !  Latest Start Time      ==> 10:59:00  3__ days later                  !
  !  Deadline Time          ==> 10:59:00  4__ days later                  !
  !                                                                       !
  !  Schedule Dependency    ==> N                                         !
  !                                                                       ! *
  ! ---PF1---PF3------------PF5----------------PF9---PF10---PF11---PF12--  !
  !    Help  End            Save               LMsg  Acct   ScDep  Menu   !
  +-----------------------------------------------------------------------+
Enter-PF1---PF2---PF3---PF4---PF5---PF6---PF7---PF8---PF9---PF10--PF11--PF12---
      Help  Add   End         Save        Up    Down                   Menu
```

If scheduling parameters for an existing job are already defined, they appear in this window and you can modify them for the job. When defining a new schedule, some default values are already displayed. You can override them by overtyping them here.

# Time Frames

Time frames defined on the job level override time frame definitions made on the network level for this job. If no time frames are defined here, the job network defaults apply.

**Note:**
If this function is invoked for an active job, the time frames contain the complete calculated date and time. Both can be modified.

# Field Descriptions: Scheduling Parameters

You can define the following parameters:

| Field | Description |
|---|---|
| Estimated Elapsed Time | The expected total running time for the job.<br>If **not specified explicitly**, this value is derived from the average running time of previous runs of the same job, displayed in the field directly below.<br>If, for a **dummy job**, this value is not equal to zero (# 0), then the dummy job is **executed** for exactly this amount of time. This enables you to perform time simulations, etc.<br>Special value: For NET-type jobs, 999999 can be specified. In this case, all start times after that are set to the ending times in the sub-network. |
| Average | Average running time computed from 5 previous runs (see next field History Elapsed Time). |
| History Elapsed Time | Shows real running times of previous runs of the job. The average running time of all previous runs is used to compute the probable time the job will finish. |
| Earliest Start Time | The job will not be started before this time. See the subsection Time Frames above. Use "days later", if the earliest start time is more than 1 day later than the network start time. |
| Latest Start Time | The job will not be started after this time. See the subsection Time Frames above.<br>If this time precedes the earliest start time, and "days later" is null, "days later" is set to **1** so this time follows the earliest start time. |
| Deadline Time | The job should be finished before this time. If the job cannot be finished before this time, it is not submitted. See the subsection Time Frames above. **Dummy jobs** with Estimated Elapsed Time not equal to zero (# 0) are finished at this time at the latest.<br>If this time precedes the earliest start time, and "days later" is null, "days later" is set to **1** so this time follows the earliest start time. |
| days later | You can use this field for Earliest Start, Latest Start and Deadline to define a time span lasting longer than 24 hours.<br>**Note:**<br>If Latest Start or Deadline is before the Earliest Start and their "days later" fields are empty, the "days later" value of Earliest Start (or the following day, if necessary) is used for the Latest Start and Deadline "days later" fields. |
| Schedule Dependency | A **Y** here indicates that this job has a schedule dependency. To define schedule dependency, press PF11 (ScDep). For more information, see the subsection Defining Schedule Dependency for a Job. |

**Notes:**
The behavior for schedule times is:

1. If Latest or Deadline *both* time and "days later" are empty, global defaults are applied.
2. If Latest or Deadline time is given and "days later" is empty, "days later" is automatically filled as described above.

 Copyright © Software AG 2003

3. If applying any of above rules, and the Latest Start Deadline ’days later’ becomes greater than 999, it remains empty and an error message is issued.

- Press PF5 (Save) to save the job scheduling parameters.
- Press PF3 (End) to return to the Job Maintenance screen.

# Special PF Keys: Scheduling Parameters

You can perform the following functions from the Scheduling Parameters window using these PF keys:

| Key | Name | Function |
|---|---|---|
| PF9 | LMsg | Send late message. Define users to be informed, if the job was not executed in the defined time range. |
| PF10 | Acct | Job Accounting. Display job accounting data for the job. |
| PF11 | ScDep | Schedule-dependent activation. Define days on which the job is to be replaced by a DUMMY job. |

# Sending a Late Message to One or More Users

**To send a message informing one or more users that the job could not be submitted**

- Press PF9 (LMsg).

  A window opens in which you can define message destinations.

  The functionality of message receiver tables is described here.

# Job Accounting Data

**To display job accounting history from the Scheduling Parameters window**

- Press PF10 (Acct).

  A window opens displaying the time and run number interval:

```
 15.11.01               *** Entire Operations 4.1.1 ***               15:59:20
 Owner SN                      Job Maintenance              Network BIG-1
  +-------------------------------------------------------------------------+--
  !                                                                         !
  !                          Scheduling Parameters                          !
  !  Job JOB-014                                                            !2
  !                                                  Tape Drives ==> ___    !1
  !                                                                         !1
  !  Estimated Elapsed Time ==> _________ Min.    Average ==>      7.00      !1
  !  History Elapsed Time   ==>      2.00     12.00                         !
  !                                                                         !1
  !                                                                         !2
  !  Earliest  +-----------------------------------------------------+       !1
  !  Latest St !                                                     !       !1
  !  Deadline  !  Owner SN Network BIG-1 Job JOB-014                 !       !
  !            !             Date / Run Number Selection             !       !2
  !  Schedule  !                                                     !       !
  !            !  From Date 15.11.01  00:00   to 15.11.01  16:00    !       !**
  ! ---PF1---P !  From Run  1____             to 99999              !12--   !
  !    Help  E !                                                     !nu     !g
  +----------- !  PF3  End                                           !-------+
Enter-PF1---PF +-----------------------------------------------------+1--PF12---
      Help  Add   End         Save        Up    Down                    Menu
```

The default interval is the current date from midnight until the present time.

# Field Descriptions: Date / Run Number Selection

The input fields of the Date / Run Number Selection window are described in the following table:

| Field | Description |
|---|---|
| From Date | Enter the date and time from which to display accounting data. |
| to | Enter the date and time until which to display accounting data. |
| From Run ... to | Enter the range of run numbers for which to display accounting data. |

- Enter dates, times and run numbers and press Enter. The following screen appears:

 Copyright © Software AG 2003

```
 15.11.01               *** Entire Operations 4.1.1 ***              10:56:18
 Owner  SN                     Job Accounting Data          Network DEMO-NET
-------------------------------------------------------------------------------
 Job         Run  JobId  Date      Start     Stop   Elapsed min CPU Time sec
 JOB1         748  1450  10.10.01  10:00:09  10:00:09     0.01      0.01
              749  1783            12:00:30  12:00:31     0.01      0.01
              750  1005            14:00:22  14:00:23     0.01      0.01
              752  1867  10.10.01  12:00:16  12:00:16     0.01      0.01
              757  3975  04.11.01  10:00:06  10:00:06     0.01      0.01
              758  4314            12:00:17  12:00:18     0.01      0.01
              759  4679            14:00:09  14:00:10     0.01      0.01
              765  4085  10.11.01  14:08:57  14:08:57     0.01      0.01





                              --------  --------
 Averages from 10.10.01 10:00 to 10.11.01 14:08 are       0.01      0.01
 ****************************** Bottom of Data ******************************
Enter-PF1---PF2---PF3---PF4---PF5---PF6---PF7---PF8---PF9---PF10--PF11--PF12---
                  End                     Up    Down
```

The Job Accounting Data screen contains job execution time information collected by the **Entire Operations** Monitor. The job elapsed time is in minutes and the CPU time is in seconds. Average values are available at the bottom of the screen.

This function is also available for job networks.

# Column Headings: Job Accounting Data

For explanation of the column headings on the Job Accounting Data screen, see the subsection Column Headings: Job Accounting Data in the section Reporting.

**Note:**
BS2000/OSD
Since the BS2000/OSD LOGOFF message does not contain seconds, the elapsed time cannot be calculated exactly.

# Schedule Dependency for a Job

This subsection covers the following topics:

- Excluding a Job from Actual Execution
- Defining Schedule Dependency
- Field Descriptions: Schedule Dependency Definition for Job
- Special PF Keys: Schedule Dependency Definition for Job
- Examples

---

## Excluding a Job from Actual Execution

With this feature you can exclude a job from actual execution on certain schedule days without disturbing the job network structure. If a job is not to be activated, it can be converted into a **dummy** job just for this run. For example:

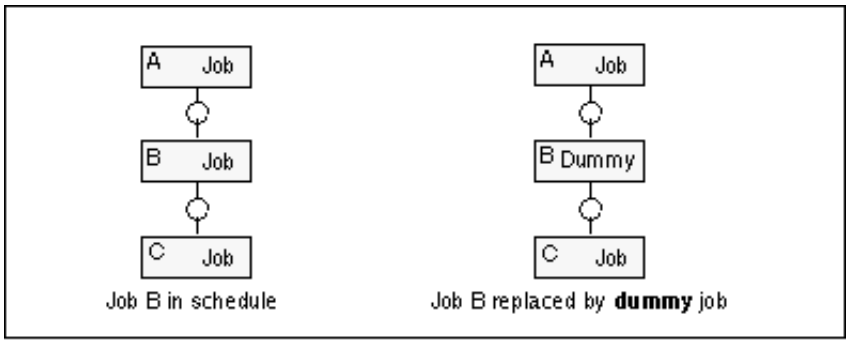


You can define job activation or input condition usage to be checked only on certain days.

**Note:**
You can also define schedule dependency for input conditions. For more information, see the subsection Defining Schedule Dependency for an Input Condition.

## Defining Schedule Dependency

**To define schedule dependency at the job level**

- Press PF11 (ScDep) in the Scheduling Parameters window.

  The Schedule Dependency Definition for Job window opens:

 Copyright © Software AG 2003

```
 15.11.01               *** Entire Operations 4.1.1 ***               16:14:55
 Owner SN                       Job Maintenance              Network DEMO-NET
  +-----------------------------------------------------------------------+--
  !         +-------------------------------------------------------------+
  !         !                                                             !
  !  Job JO !       Schedule Dependency Definition for Job                !
  !         !                                                             !
  !         !  Owner   SN              Job       JOB4                     !
  !  Estima !  Network DEMO-NET        Condition                          !
  !  Histor !                                                             !
  !         !  The Job will be activated only (+) / not activated (-),    !
  !         !  if the execution date has the following position in the    !
  !  Earlie !  job network schedule or calendar:                          !
  !  Latest !                                                             !
  !  Deadli !        Usage ==> _  + only              - except            !
  !         !                     A after Holiday too B before Holiday too !
  !  Schedu !         Type ==> _  H is Holiday    X is Workday            !
  !         !                     C Calendar Day  W Workday  S Schedule Day !**
  ! ---PF1- !    in Period ==> _  W Week          M Month    Y Year        !
  !    Help !  at Position ==> ______                                     !g
  +-------- !  ----PF1------PF3---------PF5------------------PF9----------- !
Enter-PF1-- !      Help     End         Save                 Delete        !--
      Help  +-------------------------------------------------------------+
```

# Field Descriptions: Schedule Dependency Definition for Job

The input fields of the Schedule Dependency Definition for Job window are described in the following table:

| Field | Description | |
|---|---|---|
| Usage | Enter one of the following values: | |
| | + | The job or condition is activated **only** if the execution date satisfies the criteria entered in the Type, in Period and at Position fields. |
| | **A** | Like +, but the **first** workday **after** a holiday is valid, too. |
| | **B** | Like +, but the **last** workday **before** a holiday is valid, too. |
| | **-** | The job or condition is activated **except** when the execution date satisfies the criteria entered in the Type, in Period and at Position fields. |
| Type | Enter one of the following values: | |
| | **H** | **Any Holiday**, no Period or Position required. |
| | **X** | **Any Workday**, no Period or Position required. |
| | **C** | **Calendar day** within the defined Period. |
| | **W** | **Workday** within the defined Period. |
| | **S** | **Schedule day** within the defined Period. |
| in Period | Enter one of the following values: | |
| | **W** | **Week** |
| | **M** | **Month** |
| | **Y** | **Year** |
| at Position | Enter + or - followed by a number to indicate a particular day within the Period defined above. For the period W (week) you can define up to 3 days simultaneously. See the examples below. | |

# Special PF Keys: Schedule Dependency Definition for Job

You can perform the following function from the Schedule Dependency for Job window using this PF key:

| Key | Name | Function |
|---|---|---|
| PF9 | Delete | Delete entries for Usage, Type, in Period, at Position. |

# Examples

- To activate a job only on the last workday of the month:

| Usage | Type | in Period | at Position |
|---|---|---|---|
| + | W | M | -1 |

- Not to activate a job on Wednesdays:

| Usage | Type | in Period | at Position |
|---|---|---|---|
| - | C | W | +3 |

- To activate a job every Monday (but on Tuesday, if Monday is a holiday):

 Copyright © Software AG 2003

| Usage | Type | in Period | at Position |
|---|---|---|---|
| A | W | W | +1 |

- To activate a job every Monday, Wednesday and Friday:

| Usage | Type | in Period | at Position |
|---|---|---|---|
| + | C | W | +135 |

# Turn of the Year

This subsection covers the following topics:

- Schedule Dependencies across the Turn of the Year
- Deleting Entries

## Schedule Dependencies across the Turn of the Year

Schedule dependencies can also be defined across the turn of the year. This applies in particular to the week, which begins in the old year and ends in the new year.

This functions only if the schedules and calendars used are defined for **both** years.

## Deleting Entries

You can delete your entries in the fields Usage, Type, in Period and in Position from the Schedule Dependency for Job window.

**To do so**

1. Press PF9 (Delete).

   The following window opens:

```
 15.11.01               *** Entire Operations 4.1.1 ***              09:24:50
 Owner SN                       Job Maintenance             Network DEMO-NET
  +-----------------------------------------------------------------------+--
  !         +-------------------------------------------------------------+
  !         !                                                             !
  !  Job JO !       Schedule Dependency Definition for Job                !
  !         !                                                             !
  !         !  Owner   SN              Job       JOB1                     !
  !  Estima !  Network DEMO-NET        Condition                          !
  !  Histor !  +-----------------------------------------------+           !
  !         !  !                                              !ed (-),     !
  !         !  !  Please confirm                              ! in the     !
  !  Earlie !  !  the Deletion of DEPENDENCY                  !            !
  !  Latest !  !  by entering 'Y' ===> _                      !            !
  !  Deadli !  !                                              !            !
  !         !  !  PF3 End                                     !Holiday too  !
  !  Schedu !  +-----------------------------------------------+            !
  !         !                    C Calendar Day  W Workday  S Schedule Day !**
  ! ---PF1- !    in Period ==> _  W Week          M Month    Y Year        !
  !    Help !  at Position ==> ______                                      !g
  +-------- !  ----PF1------PF3---------PF5------------------PF9----------- !
Enter-PF1-- !      Help     End         Save                 Delete        !--
      Help  +-------------------------------------------------------------+
```

2. Enter **Y** and press Enter, to delete all entries from this window.
3. Press PF3 (End) to return to the Scheduling Parameters window.

 Copyright © Software AG 2003

# Job Maintenance - Overview

This section covers the following topics:

- Job Maintenance
- Input Condition Maintenance
- Defining Prerequisite Resources

**Note:**
When differences in procedure between the BS2000/OSD, OS/390 and VSE/ESA operating systems occur, they are explained separately.

# Job Maintenance Facility

This section covers the following topics:

- Job Maintenance
- Job Control (JCL) Definition

---

## Job Maintenance

- Invoking Job Maintenance
- Adding or Modifying a Job Definition
- Job Types
- Operating-System-Dependent Job Definitions
- Defining a Subnetwork
- Defining a DAT Target File
- Job Dependencies
- Displaying Job Dependencies
- Connecting Jobs from the Same or Different Networks
- Disconnecting Jobs
- Copying a Job Definition
- Deleting a Job Definition
- Creating Online Documentation for Jobs
- No Re-loading after Editing
- Activating a Single Job Manually
- User-defined Log
- JCL Log
- List Jobs in Subnetwork
- Defining Prerequisite Resources for the Job

## Job Control (JCL) Definition

- JCL Locations
- Defining the Job Control (JCL) for a Job
- Editing JCL or Natural Programs
- Editing JCL for Macro Job
- Importing JCL to Natural Source
- Pregeneration of Active JCL

 Copyright © Software AG 2003

# Invoking Job Maintenance

This subsection covers the following topics:

- Displaying the Job Maintenance Screen
- Column Headings: Job Maintenance
- Line Commands: Job Maintenance
- Special PF Keys: Job Maintenance

## Displaying the Job Maintenance Screen

**To invoke the Job Maintenance facility**

1. Display the Network Maintenance screen by selecting the Network and Job Maintenance option on the Main Menu. (See the section Network Maintenance).
2. On the Network Maintenance screen, type **L** in the line command field of the network for which you wish to define or modify jobs. Press Enter.

   The Job Maintenance screen appears:

```
 04.01.02              *** Entire Operations 4.1.1 ***              13:15:16
 Owner SN                       Job Maintenance             Network SUB-1
 ------------------------------------------------------------------------------
 Cmd C R PU Job       Type Description          File or Library         Member
            *---------
 _          J1         DUM at begin
 _   C1     J2         NET Subnet                SN/A-3                (A)
 _   C1     J25        DUM between subnets
 _   C1     J3         NET Subnet                SN/A-3                (A)
 _   C1     J5         JOB                       SN.SYSF.SRCE          IEFBR14
 _
 _
 _
 _
 _
 _
 _
 ******************************** Bottom of Data ********************************
 A Depend. C Copy D Delete E Edit G Pregen. I Input Cond. J JCL L Resources
 M Mod. O EOJ Chk + Act P Prose R Activate S Sched.Parms U Add.Log Z Subnet
 Command => ____________________________________________________________
Enter-PF1---PF2---PF3---PF4---PF5---PF6---PF7---PF8---PF9---PF10--PF11--PF12---
      Help  Add   End         Save        Up    Down                   Menu
```

   The main information section of this screen displays all jobs defined for the selected network.

## Column Headings: Job Maintenance

The following table explains the column headings for the data listed on the Job Maintenance screen:

| Column | Description | |
|---|---|---|
| Cmd | One-character line command input field. Possible options are listed in the command section of the screen (see Line Commands: Job Maintenance). | |
| *(no heading)* | There is another column without a heading between C and R. Possible values: | |
| | **D** | This is a dummy job. For more information, see the subsection Job Types. |
| | **G** | Pregenerated JCL exists (see line command G). |
| | **P** | (Started tasks) This job ends a started task. |
| | **R** | This is a recovery job. For more information, see the subsection Defining Recovery Action in the section End-of-Job Checking and Actions. |
| C | Summary of input conditions. For more than 9 conditions, a plus sign + appears here. | |
| R | Summary of resources. For more than 9 resources, a plus sign + appears here. | |
| P | If a description is available for the job listed, P appears here. | |
| U | If additional logging has been defined for the job listed, U appears here. | |
| Job | User-defined job name. Use an asterisk * as wildcard to enter selection criteria for displaying job name. | |
| Type | Job type. You can find a detailed description of the job types. See also the subsection Adding/Modifying a Job Definition. | |
| Description | A short description of the job. | |
| File or Library | Physical storage of JCL according to job type. | |
| Member | The member which contains the JCL. This applies for:<br>• Natural source<br>• PDS (OS/390)<br>• LIB (OS/390)<br>• PAN (OS/390)<br>• LMS (BS2000/OSD)<br>• VSE/ESA (VSE/ESA) member in VSE/ESA sublib<br>• RDR (VSE/ESA) member in VSE/ESA POWER RDR queue. | |

# Line Commands: Job Maintenance

You can perform several functions on any job listed on the Job Maintenance screen using line commands. The following line commands are available:

 Copyright © Software AG 2003

| Cmd | Description |
|---|---|
| A | Display job dependencies (previous and following jobs). Includes connection and disconnection of jobs. |
| C | Copy a job definition, including all associated definitions, to a new job. |
| D | Delete a job definition, including its input conditions and end-of-job checking and actions. |
| E | Edit JCL or Natural program (Editor). |
| G | Pregenerate active JCL. |
| I | Define input conditions for the job. |
| J | Define the job control. |
| L | Define prerequisite resources for the job. |
| M | Modifying a job definition. |
| O | Define end-of-job checking and actions. |
| P | Invoke the Editor to write a text description of the job. |
| R | Activate a single job. |
| S | Define scheduling parameters for the job. |
| U | Define job information to be logged. |
| Z | List jobs in sub-network (for jobs of type NET only). |

# Special PF Keys: Job Maintenance

The PF Keys of the job maintenance screen have the standard behaviour, **except** the following:

| Special PF Key | Description |
|---|---|
| **PF3** | Leave the job maintenance screen.<br>If the job maintenance screen has been invoked by the line command Z for a sub-network, you will return to the job maintenance screen of the calling network. |

The following subsections give detailed descriptions of the functions you can perform on each job using line commands.

# Adding or Modifying a Job Definition

This subsection covers the following topics:

- Adding a Job Definition
- Modifying a Job Definition
- Job Definition Screen
- Field Descriptions: Master Job Definition
- Special PF Keys: Master Job Definition

---

## Adding a Job Definition

**To add a job definition**

1. Press PF2 (Add) from the Job Maintenance screen.
2. The Job Definition screen opens.
3. Enter values for the fields described below.

   **Note:**
   Depending on your operating system, you may have to define additional parameters. Press PF6 (Specials) to open a window with the additional parameters. For further information, see the subsection Operating-System-Dependent Job Definitions.

## Modifying a Job Definition

**To modify an existing job definition**

1. Type **M** in the line command field of the selected job.
2. Press Enter.
3. The Master Job Definition window opens, containing the current values for the job.
   You can modify any name, number, JCL and/or symbol table.
4. Press PF5 (Save) to save all changes.
5. Press PF3 (End) to return to the Job Maintenance screen.

### Job Definition Screen

 Copyright © Software AG 2003

```
  +-----------------------------------------------------------------------+ 3
 !                                                                        !
 !                        Job Definition (Master)                         ! --
 !                                                                        ! er
 !  Job Name       ==> JOB-01____        Mod ==> SN       18.11.01 13:58  !
 !  Description    ==> Where it all starts___________                    ! 2
 !  Job Type       ==> MAC                                               ! 1
 !  Execution Node ==> 146 MVS/ESA                                       ! 1
 !                                                                        ! 1
 !  Special Type   ==> _          Symbol Table  ==> EXAM-ST1__            !
 !  Restartable    ==> _          Suffix Symbol ==> ___________________  ! 1
 !                                Escape Characters:    Activation ==> §  ! 2
 !                                                      Submit     ==> $  ! 1
 !                                                                        ! 1
 ! Enter-PF1---PF2--PF3--PF4---PF5---PF6---PF7---------PF9--PF10---PF12-  !
 !       Help  Add  End  Edit  Save  Spec  Symb        JCL  Copy   Menu   ! 2
 +-----------------------------------------------------------------------+ 3
 ! Enter-PF1--------PF3--PF4---PF5---PF6---PF7---PF8---------------PF12-  ! **
 !       Help       End  Edit  Save  Spec  Symb  Impo              Menu   !
 +-----------------------------------------------------------------------+ g
Command => ____________________________________________________________
nter-PF1---PF2---PF3---PF4---PF5---PF6---PF7---PF8---PF9---PF10--PF11--PF12---
     Help  Add   End         Save        Up    Down                    Menu
```

6. Enter values for the fields described below.

   **Note:**
   Depending on your operating system, you may have to define additional parameters. Press PF6 (Specials) to open a window with the additional parameters. For further information, see the subsection Operating-System-Dependent Job Definitions.

# Field Descriptions: Master Job Definition

The input fields of the Master Job Definition window are described in the following table:

| Field | Description |
|---|---|
| Job Name | Job name. **Entire Operations** recognizes a job by this name. It can, but need not be the same name as on the JCL job card (the operating system recognizes a job by its job card name).<br><br>Note:<br>Job names should start with a character. Job names starting with a digit are tolerated, but are not recommended. |
| Mod | User ID, date and time of last modification of the job definition. |
| Description | Short description of the job. This text appears in the list of jobs on the Job Maintenance screen. You can add a longer description of the job using the Editor (see the subsection Creating Online Documentation for Jobs). |
| Job Type | The job type as defined to **Entire Operations**. For further information, see the subsection Job Types. |
| Execution Node | The job is submitted on the node specified in this case. The default is the value specified in the job network definition. You can enter a different node for the job in this case. The name of the operating system appears after the node number. **Only currently active nodes can be defined**. |

| | | |
|---|---|---|
| Symbol Table | Name of symbol table to be referenced for substitution of variables in the dynamic JCL of a MAC-type or JOB-type job. Enter * and press Enter to list available symbol tables for network owner. Select a name from the list. Alternatively, you can enter a new name and press PF7 (Symb) to define a new symbol table. See Displaying and Modifying a Master Symbol Table in the section Symbols for more. | |
| Special Type | Leave this field **blank**, if this is a normal job or enter one of the following values: | |
| | **C** | Cyclic execution.<br>Each job type can be provided with this attribute.<br>(This is a replacement and extension of the CYC job type)<br>If C is defined, then a cyclic interval must be defined in the job schedule parameters. This is checked during job activation and before job start. |
| | **D** | Execution as a dummy job. This allows you to prevent the job from being executed without having to delete the definition. You can also set this type in an active job before a repetition.<br>If this value is deleted in an active job, then the active JCL is generated, provided that it is already present. However, this does not have a resubmission of the job as a consequence.<br>To resubmit the job, you are to use the line command R in the list of active jobs in this case as well. See Resubmitting an Active Job in the section Active Job Networks. |
| | **P** | Stops a started task (only for job type STC). |
| | **R** | For a recovery job. You must also use R for jobs that are later activated with the job import API NOPUJIxN.<br>**Note:**<br>Recovery jobs are not activated during a normal job network activation. They are activated only if they are defined for another job and if a certain event makes a recovery necessary. |
| Escape Act | This is the activation escape character. It is a prefix for Natural code lines and symbols to be replaced at activation time. **If you change this character, dynamic JCL could become invalid**. | |
| Sub | This is the submission escape character. It is a prefix for symbols to be replaced at submission time. **If you change this character, dynamic JCL could become invalid**. The default is $. | |
| | BS2000/OSD: | The default escape characters must be set to ^ and ′ respectively (see the subsection Symbol Replacement in the section System Overview). |

 Copyright © Software AG 2003

| | | |
|---|---|---|
| Restartable | The job can be restarted automatically. Possible values: | |
| | **Y** | The job is to be restarted without any recovery after a system breakdown. |
| | **N** | No automatic restart after a system breakdown. |
| | **R** | BS2000/OSD: /RESTART when job is repeated. Sysout files are not renamed. |
| | **Note:** | BS2000/OSD /RESTART:<br>Automatic sysout rerouting can be delayed with the line:<br>/REMARK EOR-SYSOUT-DIRECT=LATER<br>immediately after the /LOGON command. Later, the line:<br>/REMARK EOR-SYSOUT-DIRECT=NOW<br>must appear. From now on, the sysout will be rerouted. This allows user-defined actions before using a sysout file. |
| | **Criteria for automatic job restart:** | |
| | OS/390:<br>BS2000/OSD: | This field must be marked Y.<br>Job submission time must be before last IPL time and the job must not be terminated. MonJV must contain $R. System session number at job check time must be different from session number at submission time. |
| Suffix Symbol (optional) | If the job is to be activated multiply in parallel, then this field must contain a symbol name which is in the defined symbol table. The symbol itself must contain the suffixes to be appended to active job names and output conditions. Sum of the lengths (prefix+suffix) must not exceed the maximum field lengths for job names or conditions. For example, if the master job name is PARA, and the symbol contains 001, 003, 012, then the active jobs PARA001, PARA003 and PARA012 are created.<br>If the Suffix Symbol value is not defined in a network and the network has a caller (if it is a sub-network), then the search for the Suffix Symbol is performed upward up to the highest level.<br>If the Suffix Symbol does not contain any values, the job is activated as a temporary dummy job. For information about the definition of multiple symbol values, see Multiple Symbol Values in the section Symbols. For information about the assignment of multiple symbol values to Suffix Symbol, see the subsection Symbol Replacement with Multiple Symbol Values. | |
| JCL Location | Type of JCL source. In the Network Definition, this field serves as a default for the whole network. See the subsection JCL Locations. | |
| JCL Node | The JCL for the job is read from this node. It is submitted on the execution node. The default is the value specified in the job network definition and can be overridden in this case. | |

| | |
|---|---|
| Dsname/Natlib | Location of JCL according to job type.<br><br>**For Natural programs and dynamic JCL (location NAT):**<br>The Natural library in which the program or variable JCL resides. The Natural library must be located on the FUSER system file of **Entire Operations** and cannot have the same name as the **Entire Operations** library.<br><br>**For VSE/ESA:** Library and sublib, concatenated by a period (.).<br><br>**For all others:** the file name.<br><br>To list file/library names, use an asterisk * as wildcard. For example, enter XA* in this field and press Enter to list all file/library names beginning with the characters XA. To display a full list, enter only the asterisk in this field and press Enter. You can select the required file/library from this list. You can also delete the file/library from this list.<br><br>**For UNIX:** UNIX is case-sensitive (upper/lower case). Environment variables and symbols can be used in the name. |
| Member | Name of member which contains JCL (if there is JCL). List member names using the asterisk * as wildcard. For example, enter XA* in the member field and press Enter to list all member names beginning with the characters XA. To display a full list, enter only the asterisk in the member field and press Enter. You can select the required member from this list. You can also delete the member from this list.<br><br>You can also enter a non-existent member in this field, for example, if no JCL has yet been defined for the job. **Entire Operations** notifies you once but accepts the member name in the assumption that a member with this name will be created.<br><br>Before activating a network and before submitting a job, **Entire Operations** checks for the existence of a member defined for it. If it does not exist, an error message is issued. |
| Volser | Volume serial number of the file. Required only if the file is not cataloged. (**OS/390 only**). |
| Password | The file password, if the file is password-protected. |

# Special PF Keys: Master Job Definition

After having entered these objects in the Job Definition (Master) window, you can press one of the PF keys to continue in one of the following ways:

| PF Key | Name | Function |
|---|---|---|
| PF4 | Edit | Edit the JCL.<br>You can edit the jobs JCL directly from here. Make sure that you have defined JCL in advance. The JCL definition can be invoked with PF9 from this screen. |
| PF6 | Spec | Define special parameters for operating-system-specific job definitions.<br>Job type DAT: Special definitions for the DAT target file.<br>Job type NET: Defining a Sub-network. |
| PF7 | Symb | Display the symbol table specified in the Symbol Table field. You can define or change the symbol table. |
| PF9 | JCL | Define the job control (JCL) for a job. |
| PF10 | Copy | Copy a new job definition from an existing one. |

 Copyright © Software AG 2003

# Job Types

This subsection covers the following topics:

- Entire Operations Job Types
- Special PF Keys: Master Job Definition

## Entire Operations Job Types

An **Entire Operations** job has a wider meaning than a job in terms of the operating system.

You can define the following job types to **Entire Operations**:

| Job Type | Description |
|---|---|
| CYC | **Cyclic jobs:**<br>A cyclic job is executed in each active phase of the **Entire Operations** Monitor. A cyclic job has access to almost all operating system functions (using Entire System Server technology). A cyclic job can thus be used as a permanent watch job.<br>CYC type jobs have no executable part. Actions can be carried out in an end-of-job action routine, for instance (see Defining End-of-Job Action User Routine in the section End-of-Job Checking and Actions).<br>For new developments it is recommended not to use this job type any longer. Instead of that, the special type C (cyclic execution) can be defined in the job definition. This attribute can be used for all job types. Thus, it is also possible to cyclically submit normal jobs or subnetworks.<br>The job type DUM with the special type C functionally corresponds to the job type CYC. |
| DAT | **Data File Generation:**<br>Jobs of type DAT can be used to create text files in the same way as active JCL is generated. Instead of a submission, the created text is just being written to a text (data) file.<br>Symbol replacement, symbol functions, text block inclusions can be used like in other JCL.<br>For more details on data file generation, please see Defining a DAT Target File. |
| DUM | **Dummy jobs:**<br>A dummy job has no JCL and is not submitted to the operating system. You can use dummy jobs to set input conditions with a time range, to provide a time window for other jobs or as placeholders for future or seldom used jobs, etc. A manual job can be defined as a dummy type job. You can define an 'estimated' running time for a dummy job (see the field Estimated Elapsed Time). The dummy job is then 'executed' for exactly this amount of time without burdening the system. |
| JOB | **Standard operating system jobs:**<br>This includes all jobs with their own JCL. JOB-type jobs are submitted as batch jobs. The JCL of JOB-type jobs can contain symbols as placeholders for variables defined in the symbol table specified for the job. These symbols are replaced by their current value at job activation or at job submission time. (See the subsection Dynamic JCL Generation in the section System Overview. |
| MAC | **Jobs with dynamically generated JCL:**<br>The JCL of MAC-type jobs is written using the **Entire Operations** MACRO facility, which allows the use of variables anywhere in the JCL. Dynamic generation of JCL refers to the automatic substitution of these variables with their current values either when the job network is activated or when the job is submitted. The same job can thus have different job cards for different activation. (See the subsection Importing JCL to Natural Source and the subsection Dynamic JCL Generation in the section System Overview). |

| | |
|---|---|
| NAT | **Natural programs:**<br>These are Natural batch programs which can be defined to **Entire Operations** as a job within a network.<br>Execution of this job type consists of the **Entire Operations** Monitor invoking the program. They have no JCL (see also the subsection User Routines in the section System Overview). |
| NET | **Subnetworks:**<br>This job type enables you to execute a complete network within a main network. The concept of subnetworks is described in detail in the subsection Subnetworks in the section System Overview. See Defining a Subnetwork for how to define a subnetwork. |
| STC (OS/390, VSE/ESA) | **Started tasks:**<br>A started task is a special type of batch job on some operating systems. Started tasks have static JCL which can reside in any PROCLIB (OS/390) or POWER RDR (VSE/ESA). **Entire Operations** can activate and process started tasks like any other job type. |
| R3 | **Job in the SAP R/3 runtime system:**<br>**Entire Operations** uses a script language as job control for the definition of SAP R/3 batch processing. |
| SRV | **Windows Services:**<br>With this job type, you can define services under Windows. A service must first be defined in Windows before it can be started. |

# Special PF Keys: Master Job Definition

When you have entered values for the fields in the Master Job Definition window, you can press one of the PF keys below to proceed in any of the following ways:

| Key | Name | Function |
|---|---|---|
| PF4 | Edit | Define JCL or a Natural program, depending on job type. (see the subsection Editing JCL or Natural Programs) |
| PF6 | Spec | Define special parameters for operating-system-dependent job definitions.<br>Define a subnetwork. |
| PF7 | Symb | Display the symbol table specified in the Symbol Table field. You can define or modify it. |
| PF8 | Impo | Import JCL from a PDS to a Natural library (see the subsection Importing JCL to Natural Source). |
| PF9 | JCL | Define the JCL. This action is required for all job types with JCL. |
| PF10 | Copy | Copy an existing job definition to the new job definition. |

When you have finished processing the job definition, you can:

- PF5 (Save) to save the job definition and then press PF3 (End) to return to the Job Maintenance screen, or
- press PF3 (End) to return to the Job Maintenance screen without saving the job definition.

 Copyright © Software AG 2003

# Operating-System-Dependent Job Definitions

This subsection covers the following topics:

- Exceptions
- BS2000/OSD Specials
- Field Descriptions: BS2000/OSD Specials
- OS/390 Specials
- DOS/VSE Specials
- Field Descriptions: Special Definitions for DOS/VSE
- UNIX and Windows Specials

---

## Exceptions

Some (execution or JCL) operating systems or JCL locations may require some additional definitions.

**To invoke them**

- Press PF6 (Spec) from the Master Job Definition window.

  Depending on the operating system, a special window opens or the message Function not available for ... appears.

## BS2000/OSD Specials

**To define special parameters for BS2000/OSD jobs**

- Press PF6 (Spec) from the Master Job Definition window.

  The following window opens:

```
  +-----------------------------------------------------------------------+
  !                                                                       !
  !                          Master Job Definition                        ! -
  !                        BS2000 Specials, Execution                     ! r
  !                                                                       !
  !             Owner ==> EXAMPLE           Job Type ==> MAC              !
  !           Network ==> B60-FLOW         Exec Node ==>  31 BS2000       !
  !               Job ==> JOB-01                                          !
  !                                                                       !
  !   Default User ID ==> SN______                                        !
  !    Submit User ID ==> SN______   Submit Password ==>                  !
  !    Account Number ==> ________    Sysout User ID ==> ________          !
  !  BS2000 Job Class ==> ________    Sysout Cat  ID ==> ____              !
  !      Share Sysout ==> N           Collect Syslst ==> N                !
  !                                                                       !
  !      MonJV ==> ____________________________________________________   !
  !   Password ==>                                                        !
* !                                                                       ! *
A ! Enter-PF1---------PF3---------PF5-------------------------------PF12-- !
M !       Help        End         Save                              Menu   !
C +-----------------------------------------------------------------------+
nter-PF1---PF2---PF3---PF4---PF5---PF6---PF7---PF8---PF9---PF10--PF11--PF12---
     Help  Add   End         Save        Up    Down                    Menu
```

# Field Descriptions: BS2000/OSD Specials

The input fields of the BS2000/OSD Specials window are described in the following table:

 Copyright © Software AG 2003

| Field | Description |
|---|---|
| BS2000/OSD Def User ID | Enter a valid logon User ID defined for BS2000/OSD. This ID has no meaning for other operating systems. Unqualified file and job variable names in this job definition are prefixed with this BS2000/OSD user ID. |
| | **Note:** The User ID TSOS can be defined **only** if the user defining the ID is working under TSOS. |
| Submit Userid | Jobs in BS2000/OSD are submitted under this User ID by the **Entire Operations** monitor. This ID has no meaning for other operating systems. |
| | Notes: The User ID TSOS can be defined **only** if the user defining the ID is working under TSOS.<br>In "Monitor standard values/submit user type" in the access control system, certain checks of the submit user ID can be defined. See also the Entire Operations Administration Documentation, field Submit Security User Type in subsection Monitor Defaults in the section System Administrator Services.<br>If this field is left blank, then the **Default User ID** is inserted at job activation. |
| Account Number | Enter an account number to be used for the BS2000/OSD submit user ID. If you leave this field **blank**, the account number is taken automatically from the BS2000/OSD Join Entry (only if NOP Monitor is under TSOS or under the same user ID as the job). Symbol replacement is performed in this field, if the activation escape character is used. |
| BS2000/OSD Job Class | Enter a valid, defined BS2000/OSD job class for job submission. Symbol replacement is performed in this field, if the activation escape character is used. |
| Share Sysout | Make BS2000/OSD Sysout File shareable. If you enter Y here, the internal temporary sysout file can be accessed from other BS2000/OSD user IDs. |
| Submit Password | Enter the password for job submission. (Required only for BS2000/OSD Password Encryption). |
| Sysout Userid | Enter the User ID under which internal sysout files are created by **Entire Operations**. If you leave this field blank, the Submit Userid is used. |
| Sysout Catid | Enter the sysout catalog ID. This is the catalog ID under which internal sysout files are created by **Entire Operations**. This field is meaningful only if you specify a Sysout Userid different from the Submit Userid. |
| Collect Syslst | If you enter Y here, and if the job contains a SYSLST assignment (like /SYSFILE SYSLST=... or /ASSIGN-SYSLIST TO-FILE=...), the SYSLST output is appended to the sysout collection by **Entire Operations**. The SYSLST output is then also available in the sysout online display. |
| LMS Member for | This field can be used specially for long member names. If the JCL location is LMS and you leave this field **blank**, the short member field is used. |
| LMS Member Version | Enter the version of the specified LMS member. This must be exactly the same as given in LMS itself. Leading zeroes must be specified in the same way. |
| Type | Enter the LMS member type. Possible values: S, J, D, X |
| MonJV | Enter the name of the BS2000/OSD Monitor Job Variable to be used at job submission. If you leave this **blank**, **Entire Operations** generates an internal unique name, if product JOB VARIABLES is available. |
| Password | Enter the password for the defined Job Variable. Only alphanumeric passwords are supported. |

# OS/390 Specials

**To define OS/390-specific parameters**

- Press PF6 (Spec) in the Master Job Definition window.

  The following window appears:

```
  +-----------------------------------------------------------------------+
  !                                                                       !
  !                          Master Job Definition                        ! -
  !                          MVS Execution Specials                       ! r
  !                                                                       !
  !             Owner ==> EXAMPLE           Job Type ==> MAC              !
  !           Network ==> E60-FLOW         Exec Node ==> 146 MVS/ESA      !
  !               Job ==> JOB-01                                          !
  !                                                                       !
  !    Submit User ID ==> ________                                        !
  !                                                                       !
  ! Enter-PF1---------PF3---------PF5------------------------------PF12--  !
  !       Help        End         Save                              Menu   !
  +-----------------------------------------------------------------------+
 ! Enter-PF1---PF2--PF3--PF4---PF5---PF6---PF7---------PF9--PF10---PF12-  !
 !       Help  Add  End  Edit  Save  Spec  Symb        JCL  Copy   Menu   ! 2
 +-----------------------------------------------------------------------+ 3
******************************** Ende der Daten ******************************
A Depend. C Copy D Delete E Edit G Pregen. I Input Cond. J JCL L Resources
M Modify  O EOJ Chk + Act  P Prose  R Activate  S Scheduling Parms  U Add.Log
Command => ____________________________________________________________
nter-PF1---PF2---PF3---PF4---PF5---PF6---PF7---PF8---PF9---PF10--PF11--PF12---
     Help  Add   End         Save        Up    Down                   Menu
```

The input field has the following meaning:

| Field | Description |
|---|---|
| Submit User ID | In OS/390, the **Entire Operations** Monitor starts jobs under this user ID. You can only define this user ID if you are logged on to the executing node with the same user ID.<br>Default: If this field is empty, the user ID from the last submit user ID change is taken.<br>In "Monitor standard values/job start user type" in the access control system, certain checks of the job start user ID can be defined. See also the Entire Operations Administration Documentation, field Submit Security User Type in the subsection Monitor Defaults in the section System Administrator Services. |

# DOS/VSE Specials

**To define special parameters for VSE/ESA jobs residing in VSE/ESA libraries**

- Press **PF6** (Spec) from the Master Job Definition window.
- The following window opens:

 Copyright © Software AG 2003

```
 15.11.01               *** Entire Operations 4.1.1 ***               09:55:05
 Owner SN                       Job Maintenance              Network VSE-01
  + +-------------------------------------------------------------------------+
  ! !                                                                         !
  ! !                          Master Job Definition                          !
  ! !                      Special Definitions for DOS/VSE                    !
  ! !                                                                         !
  ! !             Owner ==> SN                Job Type ==> JOB Loc ==> QUO    !
  ! !               Job ==> QUOTA-1           JCL Node ==>  33 DOS/ESA        !
  ! !                                                                         !
  ! !                                                                         !
  ! !  Library     ==> SAGPROD_                                               !
  ! !  Sublib      ==> NOP_____                                               !
  ! !  Member      ==> NOPOK01_                                               !
  ! !  Member Type ==> JCL_____           VSAM Catalog ==> ________           !
  ! !  Volser      ==> ______                                                 !
  ! !                                                                         !
  ! !                                                                         !
  ! ! Enter-PF1---------PF3---------PF5-----------------------------PF12--    !
  ! !       Help        End         Save                             Menu     !
  + +-------------------------------------------------------------------------+
Enter-PF1---PF2---PF3---PF4---PF5---PF6---PF7---PF8---PF9---PF10--PF11--PF12---
      Help  Add   End         Save        Up    Down                    Menu
```

# Field Descriptions: Special Definitions for DOS/VSE

The input fields of the Special Definitions for DOS/VSE window are described in the following table:

| Field | Description |
|---|---|
| Library | Enter the name of the VSE/ESA library within the selected file. |
| Sublib | Enter the name of the VSE/ESA sublibrary within the selected file. You can use an asterisk * as wildcard to open a selection window. |
| Member | Enter the name of the member where the JCL for the job resides. You can use an asterisk * as wildcard to open a selection window. |
| Member Type | Enter the member type of the VSE/ESA library. |
| Volser | Enter the volume serial number of the file where the JCL resides. This is a required parameter for VSE/ESA. |
| VSAM Catalog | Enter the name of the VSAM catalog for the selected file. |

# UNIX and Windows Specials

**To define special parameters for UNIX and Windows jobs**

- Press PF6 (Spec) from the Master Job Definition window.

  The following screen appears:

```
  +-----------------------------------------------------------------------+ 4
  !                                                                       !
  !                        Job Definition (Master)                        ! --
  !                                                                       ! er
   +-----------------------------------------------------------------------+
   !                                                                       !
   !                          Master Job Definition                        !
   !                  UNIX and Windows Specials, Execution                 !
   !                                                                       !
   !             Owner ==> SN                Job Type ==> JOB              !
   !           Network ==> WNT409A         Exec Node ==> 409 WIN/NT        !
   !               Job ==> APO1                                            !
   !                                                                       !
   !  Submit User ID ==> sn_________________       Sysout Node ==> 31___    !
   !  Submit   Group ==> eur________________     Sysout Cat ID ==> ____     !
   !                                            Sysout User ID ==> SN______ !
   !                                                                       !
 * ! Enter-PF1---------PF3---------PF5-----------------------------PF12---- !
 A !       Help        End         Save                              Menu  !
 M +-----------------------------------------------------------------------+
 Command => ____________________________________________________________
Enter-PF1---PF2---PF3---PF4---PF5---PF6---PF7---PF8---PF9---PF10--PF11--PF12---
      Help  Add   End         Save        Up    Down                    Menu
```

The input fields have the following meaning:

| Field | Description |
|---|---|
| Submit User ID | The Entire Operations Monitor will set the user ID of the shell script to this value. The user ID will be converted to lower case automatically.<br>In "Monitor standard values/job start user type" in the access control system, certain checks of the job start user ID can be defined. See also the Entire Operations Administration Documentation, field Submit Security User Type in subsection Monitor Defaults in the section System Administrator Services. |
| Submit Group | UNIX:<br>If this field is empty, the user’s default UNIX group (from /etc/passwd) is used. Otherwise, this field must contain one of the UNIX groups, which is visible in the output of the UNIX groups command.<br><br>Windows:<br>You can specify the userŸs domain in this field. |
| Sysout Node | Only if the sysout is to be copied to BS2000/OSD:<br>Node, to which internal sysout files are to be copied by Entire Operations. The sysout node must be different from the execution node, and it must be a BS2000/OSD node.<br><br>See also: Sysout Copy (UNIX/Windows to Mainframe). |
| Sysout Cat ID | Only if the sysout is to be copied to BS2000/OSD:<br>The catalog ID, under which internal sysout files are copied by Entire Operations.<br><br>See also: Sysout Copy (UNIX/Windows to Mainframe). |
| Sysout User ID | Only if the sysout is to be copied to BS2000/OSD:<br>The user ID, under which internal sysout files are copied by Entire Operations.<br><br>See also: Sysout Copy (UNIX/Windows to Mainframe). |

 Copyright © Software AG 2003

# Defining a Subnetwork

This subsection covers the following topics:

- Subnetwork Specifics
- Subnetwork Definition
- Field Descriptions: Subnetwork Definition

## Subnetwork Specifics

The NET-type job allows you to define a whole network as a job. The subnetwork must already be defined. It must have an input condition NET-BEGIN and an output condition NET-END. The same subnetwork can be defined in different jobs of the main network.

The subnetwork can be **activated** together with the calling network (or job of the NET type) or at the moment of the NET type job start. For a detailed description, see Subnetworks in the section System Overview.

Subnetworks are assigned their own run numbers.

## Subnetwork Definition

**To define a subnetwork**

- Press PF6 (Spec) from the Master Job Definition window.

  The following window opens:

```
+-----------------------------------------------------------------------+ 8
  ! +---------------------------------------------------------------------+
  ! !                                                                     !
  ! !                      Job: Subnetwork Definition                     !
  ! !                                                                     !
  ! !  Owner REQUEST     Network P188021     Job J2          Run          !
  ! !                                                                     !
  ! !  Description       ==> job type NET                                !
  ! !                                                                     !
  ! !                                                                     !
  ! !  Subnetwork Owner  ==> REQUEST___                                   !
  ! !  Subnetwork Name   ==> P188021A__     Subnet Activation Mode  ==> A  !
  ! !  Subnetwork Run    ==>                Append Mult. Suffix     ==> _  !
  ! !                                                                     !
  ! !  Entry Condition   ==> NET-BEGIN                                    !
  ! !  Exit  Condition   ==> NET-END                                      !
  + !                                                                     !
 ** ! Enter-PF1--------PF3--------PF5-------------------------------------  !
 A  !       Help       End        Save                                    !
 M  +---------------------------------------------------------------------+
 Command => ____________________________________________________________
Enter-PF1---PF2---PF3---PF4---PF5---PF6---PF7---PF8---PF9---PF10--PF11--PF12---
      Help  Add   End         Save        Up    Down                   Menu
```

The basics of subnetworks are described in the subsection Subnetworks in the section System Overview.

# Field Descriptions: Subnetwork Definition

| Field Name | Description |
|---|---|
| Subnetwork Owner | Owner of the existing subnetwork. |
| Subnetwork Name | Name of the existing subnetwork. |
| Subnet Activation Mode | **A** (or blank) at the moment of the activation of the calling job<br>**S** at the moment of the start of the calling job<br>**D** use global default values (see Entire Operations Defaults in the Entire Operations Administration Documentation)<br>For a detailed description of this function, see the subsection Subnetworks in the section System Overview. |
| Append suffix | **Y** Append the suffix of the calling multiple job to the name of the subnetwork. The resulting name must not have more than 10 characters.<br>**else** The name of the active job network is the same as the name of the master job network. Uniqueness is ensured by different run numbers. |

**Notes:**

1. If the condition NET-END-NOTOK is found together with NET-END, the calling job is set to the status **not ok**.
2. NET-type jobs can use all kinds of prerequisite checks and can have all kinds of end-of-job actions.
3. The scheduling parameters of a NET-type job are passed on to the subnetwork. See the subsection Scheduling a Job.

 Copyright © Software AG 2003

# Defining a DAT Target File

This subsection covers the following topics:

- Sub-network Specifics
- DAT Target File Definition
- Field Descriptions: DAT Target File Definition
- Special PF Keys: DAT Target File Definition

---

## Sub-network Specifics

The NET-type job allows you to define a whole network as a job. The sub-network must already be defined. It must have an input condition NET-BEGIN and an output condition NET-END. The same sub-network can be defined in different jobs of the main network.

The sub-network can be **activated** together with the calling network (or job of the NET type) or at the moment of the NET type job start. For a detailed description, see Sub-networks in the section System Overview.

Sub-networks are assigned their own run numbers.

## DAT Target File Definition

**To define a DAT target file**

- Press PF6 (Spec) from the Master Job Definition window.

  The following window opens:

```
                        Master Job Definition
                       Specials for Job Type DAT

             Owner ==> SN                  Job Type ==> DAT
           Network ==> E41103-01          Exec Node ==> 194 BS2000
               Job ==> DAT-BS2

    Submit User ID ==> SN______
   Target Location ==> BS2         Target overwrite ==> Y
       Target File ==>
        $SN.E41103-01.OUT.1____________________________________
            Member ==> ________ ________



 Enter-PF1---------PF3---------PF5---------PF6-------------------PF12--
       Help        End         Save        Spec                  Menu
```

The basics of the job type DAT are described in the subsection Sub-networks of the section System Overview.

## Field Descriptions: DAT Target File

Only the modifiable fields are described in the following table.

| Field Name | Description |
|---|---|
| Submit User ID | The user ID, which will be used to write a DAT output file. |
| Target Location | The following target locations can be used to write DAT output files:<br>• **BS2** (BS2000/OSD) BS2000 Text File<br>• **LMS** (BS2000/OSD) LMS File<br>• **NAT** Natural Source<br>• **PDS** (OS/390) Partitioned Dataset<br>• **TXT** (UNIX, Windows) Text File<br>• **VSE** (VSE/ESA) VSE/ESA Sublib Member with Type |
| Target Overwrite | **N** Append the output to target file.<br>**Y** Overwrite target file with the output.<br>This option is available only for some target locations. |
| Target File | The file to which the DAT output is to be written.<br>Symbol replacement is possible. |
| Member | The target locations LMS, NAT, PDS also require the definition of a target file member.<br>Symbol replacement is possible. |

# Special PF Keys: DAT Target File

| PF Key | Name | Function |
|---|---|---|
| PF6 | Specials | This function is available for the target location LMS on BS2000/OSD only.<br>When you press this PF key, the window BS2000 Specials for LMS opens.<br>For more details about this topic, please see BS2000 Specials. |

 Copyright © Software AG 2003

# Job Dependencies

This subsection covers the following topics:

- Displaying Job Dependencies for a Specific Job
- Special PF Keys: Job Dependencies
- Line Commands: Job Dependencies

## Displaying Job Dependencies for a Specific Job

The Job Maintenance facility allows you to see which jobs must run before a specific job can start, and which jobs run after it.

**To display job dependencies for a specific job**

1. Type **A** in the line command input field of the selected job on the Job Maintenance screen.
2. Press Enter.

   A window opens which contains 2 smaller windows on either side of the selected job name:

```
 15.11.01               *** Entire Operations 4.1.1 ***               15:35:15
 Owner SN                       Job Maintenance              Network BIG-1
  +-------------------------------------------------------------------------+-
  !                                                                         !
  !        Predecessors         Job Dependencies         Successors         !
  !  --------------------------+                +---------------------------  !
  !  M Network    Job                                Output Condition        !
  !     Input Condition                                Network    Job        M  !
  !  _ BIG-1      JOB-013                         => E60-J014-O              !
  !     E60-J013-O           =>                       BIG-1      JOB-015    _  !
  !  _                         +---------------+=>                          !
  !                          => Ow  SN                                     _  !
  !  _                          Nw  BIG-1       =>                          !
  !                          => Job JOB-014                                _  !
  !  _                         +---------------+=>                          !
  !                          =>                                            _  !
  !  _                                          =>                          !
  !                          =>                                            _  !*
  !  --------------------------+                +---------------------------  !
  !  X Chain  D Disconnect                        X Chain  D Disconnect       !
  !  Enter----PF1---PF2------PF3-------PF5---------PF7---PF8--------------  !
E !           Help  Connect  End       Save        Up    Down                !-
  +-------------------------------------------------------------------------+
```

The selected job name and network name appear in the middle of the window. The Predecessors window on the left of the selected job contains the job and network names of the jobs that must run before the selected job can run. Directly beneath these are the linking conditions.

The Successors window on the right of the selected job contains the job and network names of the jobs for which the selected job is a prerequisite. Directly above these are the linking conditions.

You can scroll both lists by using PF7 (Up) and PF8 (Down).

# Special PF Keys: Job Dependencies

You can perform the following function from the Job Dependencies window using this PF key:

| Key | Name | Function |
|---|---|---|
| PF2 | Connect | Connect the job to a predecessor job. For the standard case, event Job OK. |

# Line Commands: Job Dependencies

Use the following line commands to perform the described functions on any job displayed in the Job Dependencies window:

| Cmd | Description |
|---|---|
| D | Disconnect the job from a predecessor or successor job. |
| X | Chain. Move the selected job into the center of the window and display its dependencies. |

 Copyright © Software AG 2003

# Displaying Job Dependencies

**To display the dependencies of any job listed in the Predecessors or Successors window**

1. Mark it with any character **except D**.
2. Press Enter.

   The selected job appears in the middle of the window with its dependencies displayed in the smaller windows.

   This feature allows you to trace job dependencies through whole networks and display cross-network job links.

   **Note:**
   An overview of job flow for the whole network is available from the Network Maintenance screen.

# Connecting Jobs from the Same or Different Networks

This subsection covers the following topics:

- Accessing the Function
- Field Descriptions: Job Connection

## Accessing the Function

You can connect two jobs within the same or different networks without defining logical conditions for them by using the **Entire Operations** default condition.

**To do this**

- Press PF2 (Connect) in the Job Dependencies window of the job you wish to connect.
- A window opens in which you can define a job which must precede the selected job:

```
 15.11.01              *** Entire Operations 4.1.1 ***              15:35:41
 Owner SN                      Job Maintenance             Network BIG-1
  +-------------------------------------------------------------------------+-
  !                                                                         !
  !        Predecessors         Job Dependencies         Successors         !
  !  --------------------------+                +--------------------------  !
  !  M Network    Job                                Output Condition        !
  !     Input Condition                                Network    Job       M  !
  !  _ BIG-1      JOB-012                         => E60-J013-O              !
  !     E60-J012-O           =>                        BIG-1      JOB-014   _  !
  !  _ BI +-------------------------------------------------------+         !
  !     E !                                                      !       _  !
  !  _    !                     Job Connection                    !         !
  !       !                                                      !       _  !
  !  _    !    from   Owner: SN________   to   Owner: SN         !         !
  !       !         Network: BIG-1_____      Network: BIG-1       !       _  !
  !  _    !             Job: __________          Job: JOB-013     !         !
  !       !                                                      !       _  !*
  !  ---- !    PF3 End                                           !--------  !
  !  X Ch +-------------------------------------------------------+ect       !
  !  Enter----PF1---PF2------PF3-------PF5---------PF7---PF8---------------  !
E !          Help  Connect  End       Save        Up    Down                !-
  +-------------------------------------------------------------------------+
```

The identifiers of the selected job appear in the protected fields on the right in the window.

## Field Descriptions: Job Connection

The input fields in the window on the left have the following meaning:

 Copyright © Software AG 2003

| Field | Description |
|---|---|
| from/ Owner | Enter owner of job to run as predecessor. |
| from/ Network | Enter network name of job to run as predecessor. |
| from/ Job | Enter name of job to run as predecessor. |

**Entire Operations** automatically provides the default condition Job OK to link the two jobs. If the job defined as predecessor terminates NOT OK, the selected job cannot be submitted and **Entire Operations** issues a message with the pending condition.

This function is also useful to link jobs across networks. In this case, you should check the input condition reference of the successor job. Use a reference different from RUN.

**Note:**
After connecting jobs within a network, a loop check is performed for the affected network. The same conditions apply as described in the subsection Checking for a Loop in a Job Network in the section Network Maintenance, with one exception: if a loop is detected in the job flow, no corresponding message appears.

# Disconnecting Jobs

This subsection covers the following topics:

- Disconnecting Jobs Linked by Conditions
- Disconnection from a Predecessor Job
- Disconnection from a Successor Job

---

## Disconnecting Jobs Linked by Conditions

**To disconnect two jobs linked by conditions**

1. In the Job Dependencies window, type **D** in the line command input field of the second job in the sequence.
2. Press Enter.

   A confirmation window opens:

```
 15.11.01               *** Entire Operations 4.1.1 ***               15:35:41
 Owner SN                       Job Maintenance              Network BIG-1
  +-----------------------------------------------------------------------+-
  ! NOP1457 - Several Predecessor Jobs                                     !
  !        Predecessors         Job Dependencies         Successors       !
  !  --------------------------+               +--------------------------  !
  !  M Network    Job                               Output Condition       !
  !     Input Condition                              Network    Job      M  !
  !  _ BIG-1      JOB-012                        => E60-J013-O             !
  !     E60-J0 +-----------------------------------------------+JOB-014   d  !
  !  _ BIG-1   !                                              !            !
  !     E60-JO !  Please confirm                              !          _  !
  !  _         !  the Disconnection from JOB-014              !            !
  !            !  by entering 'Y' ===> _                      !          _  !
  !  _         !                                              !            !
  !            !  PF3 End                                     !          _  !
  !  _         +-----------------------------------------------+            !
  !                           =>                                        _  !*
  !  ---------------------------+               +---------------------------  !
  !  X Chain  D Disconnect                        X Chain  D Disconnect      !
  !  Enter----PF1---PF2------PF3-------PF5---------PF7---PF8--------------  !
E !           Help  Connect  End       Save        Up    Down               !-
  +-----------------------------------------------------------------------+
```

3. Enter **Y**.
4. Press Enter to perform the disconnection and close the window.

   You can disconnect any two jobs linked by conditions using this function. There is no need to delete any defined conditions.

   **Note:**
   No disconnection is performed if the use of the conditions is not unique, for example:

 Copyright © Software AG 2003

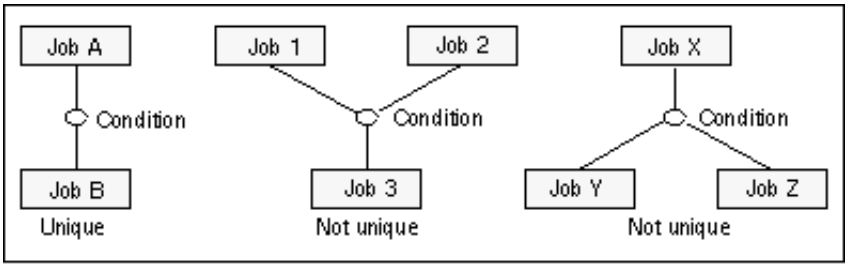


**Note:**
Remove the condition definitions manually, if the link is not unique.

# Disconnection from a Predecessor Job

When disconnecting from a predecessor job, the linking input condition definition of the job displayed in the center (of the Job Dependencies window) is deleted.

# Disconnection from a Successor Job

When disconnecting from a successor job, the linking output condition definition of an event definition of the job displayed in the center (of the Job Dependencies window) is deleted.

**Note:**
The input condition definitions of the successor job remain unchanged.
After the output condition definition is deleted, the successor job could wait for a condition which is never satisfied.

## Restrictions:

- A linking condition is deleted, only if it links no more than 2 jobs.
- If the **X** line command (Chain) was invoked for jobs in different networks, a disconnection of this type is not possible.

# Copying a Job Definition

This subsection covers the following topics:

- Select an Existing Job Definition as a Model for the New Job
- Copying JCL of an Existing Job

---

## Select an Existing Job Definition as a Model for the New Job

When defining a new job, you can select an existing job definition as a model for the new job:

1. Type **C** in the line command field of the selected job in the Job Maintenance screen.
2. Press Enter.

   A window opens with the job, network and owner name of the job you wish to copy, and an input field for a new job.

   You can copy the job under another name from the same or another network defined for the same or another owner. You can only specify another owner if you are authorized to access its networks.

3. Press Enter to save the new definition and close the window.

   The new job appears in the list of jobs in the Job Maintenance screen for the owner specified for the new job.

   **Note:**
   Copying a job does not include the definitions made at job level via the Job Maintenance screen, such as input conditions and end-of-job handling. Use the available line commands to create these definitions for each new job.

## Copying JCL of an Existing Job

**To copy the JCL of an existing job to the JCL definition**

- Invoke the Editor with PF4 and use the Editor command COPY.

 Copyright © Software AG 2003

# Deleting a Job Definition

**To delete a job definition**

1. Type **D** in the line command line of the selected job in the Job Maintenance screen.
2. Press Enter.

   A window opens in which **Entire Operations** asks you to confirm the deletion by entering the job name.

3. Press Enter to delete the job definition.

   **Note:**
   Deleting a job definition also deletes all definitions made at the job level via the Job Maintenance screen. The original JCL is not deleted.

# Creating Online Documentation for Jobs

You can add a brief description of a job when defining a job in the Master Job Definition window. This short description appears in the list of jobs on the Job Maintenance screen.

If you wish to add more online documentation for a job, you can invoke the Entire Operations Editor from the Job Maintenance screen.

**To do so**

1. Type **P** in the line command field of the selected job.
2. Press Enter.

   The **Entire Operations** Editor screen appears:

```
Edit Prose Jb: ABC3A Nw: EORACCT----------------------------- Columns 001 072
====>                                                          SCROLL===> CSR
***** ****************************** top of data ******************************
00001 Job 'ABC3A'
00002 -----------
00003 This job forces a defined event at end-of-job time and executes the
00004 program 'EORCONTI' which resides on the installation library
00005 'EORnnn.LOAD'. The necessary JCL which is named 'EORE*' is stored in
00006 the installation library 'EORnnn.SRCE'.
***** **************************** bottom of data ****************************
```

**Note:**
If no documentation exists for the job, the Editor screen appears without text. The example above shows the screen with 6 lines of text.

You can enter and edit text using Editor commands. For a detailed description of all Editor functions, see the **Software AG Editor Documentation**.

Once online documentation is written, it can be read by any user who is authorized to access the network to which the job belongs. Use the line command **P** to display the current text.

You can also display or print online documentation with the **Entire Operations** Reporting option on the Main Menu (see the subsection Network Description in the section Reporting).

 Copyright © Software AG 2003

# No Re-loading after Editing

In case of a resubmission of the active job, the pre-generated JCL is not reloaded, if the active JCL of the job has been edited in the meantime.

# Activating a Single Job Manually

This subsection covers the following topics:

- Manual Activation of a Single Job
- Field Descriptions: Job Activation

## Manual Activation of a Single Job

Just as you can perform an ad-hoc manual activation of a job network at any time to allow it to run outside of its scheduled times, you can also manually activate any job at any time, regardless of its position within a job network.

The activated job is assigned its own run number (in sequence with the network run number) and, if you do not change the date or time, is submitted immediately by the **Entire Operations** Monitor. If the job contains symbols as placeholders for variables, symbol prompting takes place as described in the subsection Symbol Prompting during Manual Activation in the section Network Maintenance.

The differences between the manual activation of a single job and the manual activation of a job network are that when a single job is activated:

- no check for defined input conditions for the job is performed;
- no output conditions are set by the job.

All other end-of-job actions defined for the job are executed.

**To activate a job manually**

1. Type **R** in the line command input field for the selected job in the Job Maintenance screen.
2. Press Enter.

   The following window opens:

```
 15.11.01               *** Entire Operations 4.1.1 ***               16:23:51
 Owner SN                       Job Maintenance              Network DEMO-NET
 ------------------------------------------------------------------------------
 Cmd C R  Job       Type Description           File or Library         Member
          *---------
 r   C1   JOB1       JOB firST-JOB             NOP.EXAMPLE.CTL         HUGO
 _   C2   JOB2    +----------------------------------------+
 _   C1   JOB3    !                                        !TL         HUGO
 _   C1   JOB4    !            Job Activation              !           DYN01
 _        MESSAGE !                                        !
 _   C1   RECOVER !                  Owner ==> SN          !TL         HUGO
 _                !                Network ==> DEMO-NET    !
 _                !                    Job ==> JOB1        !
 _                !                                        !
 _                !   Use Time in Schedule ==> N  (Y/N)    !
 _                !    or activate at Date ==> 15.11.01    !
 _                !                   Time ==> 16:23:56    !
 **************** !         JCL Check only ==> N  (Y/N)    !******************
 A Dependencies   !   Enter----PF1---PF3----------------  !s  L Resources
 M Modify  O EOJ  !   Activate Help  End                  ! Parms  U Add. Log
 Command => _____ +----------------------------------------+___________
Enter-PF1---PF2---PF3---PF4---PF5---PF6---PF7---PF8---PF9---PF10--PF11--PF12---
      Help  Add   End         Save        Up    Down                    Menu
```

 Copyright © Software AG 2003

# Field Descriptions: Job Activation

The input and output fields of the Job Activation window are described in the following table:

| Field | Description | |
|---|---|---|
| Owner | Owner of network in which job is to be activated. (**not modifiable**) | |
| Network | Network in which job is to be activated. (**not modifiable**) | |
| Job | Job name. (**not modifiable**) | |
| Use Time in Schedule | Enter **Y** (yes) here to force the defined time frames (Earliest Start, Latest Start, Deadline) to be honored, even if the current date is not a scheduled date for the network. With this option, you can force the same time dependencies as if the network were scheduled and activated automatically. For more details on network time frames, see the subsection Activating a Job Network Manually in the section Network Maintenance. | |
| or activate at Date/Time | Shows the current date and time. You can modify date and time to force activation at any time on any date. There is no limitation for future date and time settings. | |
| | **Note:** | No symbol prompting is performed for later activations. |
| JCL Check only | **Y** Only a JCL check is performed for the job network or job.<br>**OS/390, JES2:** TYPRUN=SCAN<br>**OS/390, JES3:** EXEC PGM=JCLTEST<br>**BS2000/OSD:** /MODIFY-SDF-OPTIONS MODE=TEST<br>**UNIX:** Script execution with **set -vn**<br>**Windows:** Jobs are started as ’Dummy because of JCL Check’. An actual JCL check does not take place.<br>The necessary commands are automatically inserted.<br>**N** Normal submission.<br>**Note:**<br>Active conditions set or reset by job execution for JCL check only do not interfere with active conditions of real active jobs or active networks. | |

If the activation was successful, a run number for the activated job will be returned in a message.

# User-defined Log

This subsection covers the following topics:

- Specifying User-defined Log Information
- Field Descriptions: User-defined Log Data

## Specifying User-defined Log Information

**Entire Operations** allows you to define which information is to be logged in addition to the **Entire Operations** default system log.

This information is defined at the job level and can be job sysout, JCL or selected operating system messages from the sysout.

**To specify user-defined log information**

- Type **U** in the line command input field of the selected job in the Job Maintenance screen and press Enter.

  A window opens in which you can specify the information to be logged:

```
 15.11.01              *** Entire Operations 4.1.1 ***              16:24:43
 Owner SN                   User Defined Log Data          Network DEMO-NET
 Job   JOB1
-------------------------------------------------------------------------------
             Log Sysout ==> N      (Y/N)
                  Files ==> ___ ___ ___ ___ ___ ___ ___ ___ ___ ___

                Log JCL ==> _      (Y/N)



    Log System Messages     M Code     M Code     M Code     M Code
                            _ IEF____  _ _______  _ _______  _ _______
                            _ _______  _ _______  _ _______  _ _______
                            _ _______  _ _______  _ _______  _ _______
                            _ _______  _ _______  _ _______  _ _______
                            _ _______  _ _______  _ _______  _ _______

                            S Message Contents Selection

 Command=> ____________________________________________________________
Enter-PF1---PF2---PF3---PF4---PF5---PF6---PF7---PF8---PF9---PF10--PF11--PF12---
      Help        End         Save                                      Menu
```

## Field Descriptions: User-defined Log Data

The input fields of the User-defined Log Data window are described in the following table:

 Copyright © Software AG 2003

| Field | Description | |
|---|---|---|
| Log Sysout | Specifies logging of job sysout files after job termination. Possible values: | |
| | **Y** | Logs sysout. |
| | **N** | No sysout files are logged. |
| | **Note:** | Sysout logging can also be defined in End-of-Job Handling, Action: Sysout. |
| Files (OS/390 only) | Input valid only if Log Sysout is specified. Enter number(s) of sysout file(s) to be logged. If left **blank** and Log Sysout is specified, all files are logged. | |
| Log JCL | Specifies logging of JCL after job termination. This is useful for dynamically generated JCL or if JCL is frequently modified for different job runs. Possible values: | |
| | **Y** | Logs JCL. |
| | **N** | Does not log JCL. |
| Log System Messages | Specify operating system messages to be logged. Enter a message code in a field under the Code heading. If you enter S (Message Content Selection) in the field headed M preceding a specified code and press Enter, a window opens in which you can define additional selection strings. The message is logged if no additional string is specified, or if at least one specified string is found in the message. | |

1. Specify the information to be logged.
2. Press PF5 (Save) to save the information.
3. Press PF3 (End) to return to the Job Maintenance screen.

The logged information can be viewed after job termination using the **Entire Operations** Log Information facility (option **4** on the Main Menu). For further details, see the section Log Information.

# JCL Log

The JCL log is generated from the following sources:

| | |
|---|---|
| **BS2000/OSD** | From the Enter file.<br>(The Enter file is deleted after copying into the Entire Operations Log.) |
| **OS/390** | If Entire Operations runs on a mainframe: from the sysout.<br>If Entire Operations does not run on a mainframe: from the active JCL. |
| **VSE/ESA** | From the active JCL. |
| **UNIX** | From the active JCL. |
| **Windows** | From the active JCL. |

 Copyright © Software AG 2003

# List Jobs in Subnetwork

## (Master and Active)

If a master or active job has the type NET, you can invoke the the master or active job list of the defined subnetwork directly.

**To view the job list of the subnetwork**

- Type **Z** in the line command input field of the selected job in the Job Maintenance screen or Active Jobs screen and press Enter.

  The master or active job list of the subnetwork will open.

  **Note:**
  If you leave the subnetwork job list with PF3, you will return to the calling network list.

# Defining Prerequisite Resources

Before you can define a resource as a prerequisite for a job, it must be defined to the system. Define resources to **Entire Operations** using the System Administrator Services option on the Main Menu. (See the Entire Operations Administration Documentation).

You can find a summary of resource features in the System Overview.

This section covers the following topics:

- List of Prerequisite Resources
- Adding a Prerequisite Resource Definition
- Modifying a Prerequisite Resource Definition
- Prerequisite Resource Definition (Master) Window
- Selecting a Resource by Wildcard

---

## List of Prerequisite Resources

- Column Headings: Prerequisite Resource List

**To specify resources for a job**

1. On the Job Maintenance screen, enter **L** in the line command input field of the selected job.
2. Press Enter.

   A screen opens with a list of resources already specified for the job:

```
 20.11.01              *** Entire Operations 4.1.1 ***              17:04:05
                        Prerequisite Resources (Master)
 ------------------------------------------------------------------------------
 Owner SN         Network RES-PRQ    Run from       to       Job J1
                                                  required
 Cmd  Run Job        Resource             T   Quantity  D  DNO   allocated
 _                   A001                 R       5.50  J  Y
 _                   A2345678901234567890 R       9.50
 _                   HUGO                 R       6.00
 _                   R-01                 R       5.00
 _                   R-03                 R       3.00
 _                   R-04                 R       4.00
 _                   R-10                 R      10.00
 _                   R-11                 R      11.00  J  Y
 _                   R-12                 R       3.00
 _                   R-13                 U      13.00
 _                   R-14                 R      14.00
 _                   R-20                 R      20.00
 ********************************** m o r e **********************************
 D Delete   M Modify   R Master Definition   W Where Used

Enter--PF1----PF2----PF3----PF5---------PF7----PF8----------------------------
       Help   Add    End    Save        Up     Down
```

 Copyright © Software AG 2003

## Column Headings: Prerequisite Resource List

The following table explains the column headings for the data listed in the Prerequisite Resources window:

| Column | Description | |
|---|---|---|
| Cmd | One-character line command input field. Possible options: | |
| | **D** | Delete resource as prerequisite for this job. |
| | **M** | Modify a prerequisite resource for this job. |
| | **R** | Master resource definition. |
| | **W** | Where used.<br>If invoked for a **master** job definition: Shows the usage of this resource as a prerequisite in all master job definitions.<br>If invoked for an **active** job definition: Shows the current usage of this resource by active jobs. |
| Resource | Name of resource as defined in the System Administrator Services. | |
| T | Resource Type. See here for details. | |
| Required Quantity | Resource quantity required for job execution. **Entire Operations** does not submit the job until this amount of resource is available. | |
| D | Deallocation. The deallocation mode of this prerequisite resource: | |
| | **J** | Deallocation after job termination (default). |
| | **N** | Deallocation after network termination. |
| | **K** | Keep until explicit deallocation. |
| | **Note**:<br>These allocations will be deallocated if the retention period for active condition is reached.<br><br>See also Periods of Resource Allocation. | |
| DNO | Deallocate if not Job ok (applies to deallocation mode **J** only). | |
| | **Y** | The resource will always be deallocated after job termination. |
| | **N** | If the job does not end ok, the resource will not be deallocated. (It will be deallocated at network termination anyway.) |
| allocated | Date and time when the resource was allocated for the current job. (applies to active prerequisite resources only).<br><br>If the resource has not yet been allocated or if it has already been deallocated, this field is empty. | |

# Adding a Prerequisite Resource Definition

**To specify a resource as a prerequisite for job submission**

- Use PF2 (Add) to open the prerequisite resource definition window.

# Modifying a Prerequisite Resource Definition

**To modify resources already specified for the job**

- Type **M** in the line command input field of the selected resource to open the prerequisite resource definition window.

# Prerequisite Resource Definition (Master) Window

- Fields

In this window you can define or modify a prerequisite resource definition for a job:

```
+-------------------------------------------------------+
!                                                       !
!      Prerequisite Resource Definition (Master)        !
!                                                       !
!          Resource ===> A001_________________          !
! Required Quantity ===> 5.50______                     !
!                                                       !
!        Deallocation Mode ===> J                       !
! Deallocate if Job not ok ===> Y                       !
!             Allocated at ===>                         !
!                                                       !
! Enter-PF1---------PF3---------PF5----------------     !
!       Help        End         Save                    !
+-------------------------------------------------------+
```

## Fields: Prerequisite Resource Definition (Master) Screen

 Copyright © Software AG 2003

| Field | Description | |
|---|---|---|
| Resource | Name of the resource. | |
| Required Quantity | Enter the resource quantity required for job execution. | |
| Deallocation Mode | Enter the deallocation mode of this prerequisite resource (see Periods of Resource Allocation): | |
| | **J** | Release resource after job termination. (Default) |
| | **N** | Release resource after network termination. |
| | **K** | Keep resource until explicit release. If the retention period for active conditions is reached, these resources will be released automatically. |
| | **Note**:<br>These allocations will be deallocated if the retention period for active condition is reached. | |
| Deallocate if Job not ok | (applies to deallocation mode **J** only) | |
| | **Y** | Enter **Y** to deallocate the resource, even if the job was not ok.<br>(Default) |
| | **N** | Enter **N** to keep the resource allocated, if the job ended not ok. (However, the job will still be deallocated at network termination.) |
| allocated | Date and time when the resource was allocated for the current job. (applies to active prerequisite resources only).<br><br>If the resource has not yet been allocated or if it has already been deallocated, this field is empty. | |

# Selecting a Resource by Wildcard

Use a wildcard in the resource name to display a selection list of resources which satisfy the criteria, for example:

```
+-------------------------------+
!                               !
!       Select Resource         !
!          by Marking           !
!                               !
!  Cmd  Resource Name           !
!   _   §QWERTY-RESOURCE        !
!   _   ADA-1                   !
!   _   ADA-9                   !
!   _   A001                    !
!   _   A1                      !
!   _   A2345678901234567890    !
!   _   BLA-BLA                 !
!   _   DEA1-JOB-01             !
!                               !
!  PF3 End   PF7 Up   PF8 Down  !
+-------------------------------+
```

# JCL Locations

This subsection covers the following topics:

- Physical Locations for the JCL
- Restrictions for Job Types
- Location on another Node
- Replacing Symbols
- JCL Loc. PRC: BS2000/OSD DO Procedure
- JCL Frames for BS2000/OSD DO Procedures
- BS2000/OSD Specials
- UNIX and Windows Specials

---

## Physical Locations for the JCL

**Entire Operations** offers a broad range of possible locations for its original (master) job control. You can specify the following physical locations for JCL in the field JCL Location of the Job JCL Definition (Master) window:

| JCL Location | Operating system | Description |
|---|---|---|
| (blank) | --- | None (no JCL required) |
| BS2 | BS2000/OSD | SAM or ISAM file<br>Please see BS2000/OSD Specials. |
| LIB | OS/390 | Librarian |
| LMS | BS2000 | LMS library<br>Please see BS2000/OSD Specials. |
| NAT | --- | Natural source |
| PDS | OS/390 | Partitioned file |
| PRC | BS2000/OSD | Callable procedure |
| RDR | VSE/ESA | VSE/ESA Reader Queue, for STC |
| VSE | VSE/ESA | VSE/ESA partial library |
| TXT | UNIX, Windows | Text file<br>Please see UNIX and Windows Specials. |

The NAT Location is available on each operating system.
Other locations are restricted to the operating systems specified.

## Restrictions for Job Types

- Jobs of type NAT and MAC **must** be of location NAT.
- Jobs of type DUM and CYC **must not be** of any JCL location.

During definition, it is checked whether the defined JCL exists at all.
If the JCL cannot be found, a warning appears in the Job JCL Definition (Master) window.

 Copyright © Software AG 2003

# Location on another Node

The JCL can be saved on another machine, not identical with the executing machine and even on another operating system, not identical with the executing operating system.

# Replacing Symbols

In all JCL locations, you can easily replace symbols.

# JCL Loc. PRC: BS2000/OSD DO Procedure

If this location has been defined, **Entire Operations** generates a BS2000/OSD Enter job in the active JCL calling this procedure.

The following rules are applied:

- The BS2000/OSD job name adopts the **Entire Operations** job name and if it is longer than 8 characters, it cuts the name to 8 characters.
- SDF statements (CALL-PROC) are used.
- The symbol table for which the job has been defined must contain all parameters of the DO procedure. The symbol values are used for calling the procedure.
- Positional and keyword parameters are supported.
- The number and the name of the parameters are automatically retrieved from the procedure (PROC / BEGIN-PROC statement).

# JCL Frames for BS2000/OSD DO Procedures

For DO procedures, a user-defined JCL frame can be used. It must be saved under the name PRCFRAME in library SYSEOR. If it is not found, **Entire Operations** generates a standard frame.

## Special Commands

| Command | Description |
|---|---|
| #ESC-FRAME <c> | For the JCL frame, defines the escape character to replace symbols. This command must be at the top and is **compulsory**. |
| #CALL-PROC | In this case, the procedure call (/CALL-PROC) is generated. |

## Example

```
#ESC-FRAME §
/.SN§P-RUN LOGON SN,1
/REMARK === PRC FRAME EXAMPLE
/REMARK §AAAA YYYYYYYYYYYY
#CALL-PROC
/STA L
§BBBB
/LOGOFF
```

**Notes:**

1. All symbols used in the JCL frame must be contained in the active symbol table of the job. The active symbol table must continue to contain all symbols for calling the procedure.
2. If a symbol does not exist, job activation is discontinued.

# BS2000/OSD Specials

**To define BS2000/OSD-specific parameters**

- Press PF6 (Spec) in the Job JCL Definition (Master) window.

  The following window appears:

```
                          Master Job Definition
                           BS2000 Specials, JCL

             Owner ==> SN                Job Type ==> JOB Loc ==> BS2
           Network ==> BS2-EX-2          JCL Node ==> 194 BS2000
               Job ==> JOB-1-ASF

   Default User ID ==> ASF_____       JCL User ID ==> ASF_____


  LMS Member for
  ==> ____________________________________________________________
  LMS Member Version ==> ________________________    Type ==> ________

 Enter-PF1---------PF3---------PF5-------------------------------PF12--
       Help        End         Save                               Menu
```

The meaning of the input fields:

| Field | Description |
|---|---|
| Default User ID | A valid, defined BS2000 logon user ID.<br>TSOS may only be defined, if the user is under TSOS himself. |
| JCL User ID | If not blank, the JCL is loaded with the rights of this BS2000/OSD user ID. It can be overwritten by specific definitions.<br>TSOS may only be defined if the user is logged on to TSOS.<br>Default: The user ID from the fully qualified file name. (**BS2000/OSD only**)<br>If left blank, then the default User ID (see Field Descriptions: BS2000/OSD Specials) is inserted, when the job is activated. |
| LMS Member for | **BS2000/OSD, Location LMS only:**<br>This field can be used specially for long member names. If the JCL location is LMS and you leave this field **blank**, the short member field is used. |
| LMS Member Version | **BS2000/OSD, Location LMS only:**<br>Enter the version of the specified LMS member. This must be exactly the same as given in LMS itself. Leading zeroes must be specified in the same way. |
| Type | **BS2000/OSD, Location LMS only:**<br>Enter the LMS member type. Possible values: S, J, D, X. |

 Copyright © Software AG 2003

# UNIX and Windows Specials

**To define UNIX and Windows-specific parameters**

- Press PF6 (Spec) in the Job JCL Definition (Master) window.

  The following window appears:

```
                          Master Job Definition
                     UNIX and Windows Specials, JCL

             Owner ==> EXAMPLE        Job Type ==> MAC Loc ==> NAT
           Network ==> X60-FLOW1      JCL Node ==> 501 HP-UX
               Job ==> JOB-01

       JCL User ID ==> nop_____
       JCL   Group ==> ________

 Enter-PF1---------PF3---------PF5------------------------------PF12--
       Help        End         Save                              Menu
```

The meaning of the input fields:

| Field | Description |
|---|---|
| JCL User ID | The **Entire Operations** Monitor will load JCL of type TXT with the rights of this user ID. |
| JCL Group | If this field is left blank, the standard group of the UNIX user ID is used, as defined in **/etc/passwd**. Otherwise, this field must contain one of those groups issued by the UNIX command groups. |
| UNIX Group (optional) | If this field is left blank, the standard group of the UNIX user ID is used, as defined in **/etc/passwd**. Otherwise, this field must contain one of those groups issued by the UNIX command groups.<br>This field is not relevant to Windows. |

# Defining the Job Control (JCL) for a Job

This subsection covers the following topics:

- Adding a JCL Definition
- Field Descriptions: Master JCL Definition
- Special PF Keys: Master JCL Definition

---

## Adding a JCL Definition

**To add a JCL definition**

1. press PF9 (see Special PF Keys: Master Job Definition) in the Master Job Definition.
2. Enter the line command **J** (see Line Commands: Job Maintenance) in this document.

   The following window appears:

```
 04.01.02               *** Entire Operations 4.1.1 ***               14:09:16
 Owner EXAMPLE                  Job Maintenance             Network E60-FLOW
  +-----------------------------------------------------------------------+ --
  !                                                                       ! er
  !                       Job: JCL Definition (Master)                    !
  !                                                                       ! 2
  !  Job Name       ==> JOB-01            Mod ==> SYSDBA   07.03.01 16:49  ! 1
  !  Description    ==> Where it all starts                                ! 1
  !  Job Type       ==> MAC                                                ! 1
  !  Execution Node ==> 146 MVS/ESA           Symbol Table ==> EXAM-ST1    !
  !                                                                       ! 1
  !  JCL Location   ==> NAT                                                ! 2
  !  JCL Node       ==> 146 MVS/ESA                                        ! 1
  !  File/NatLib    ==> EOR-T411_____________________________________      ! 1
  !  Member         ==> E60-M02_ ________                                  !
  !  VolSer         ==> ______  (if not catlgd)   Password ==>             ! 2
  !                                                 defined ==> no         ! 3
  ! Enter-PF1--------PF3--PF4---PF5---PF6---PF7---PF8---------------PF12-  ! **
  !       Help       End  Edit  Save  Spec  Symb  Impo              Menu   !
  +-----------------------------------------------------------------------+
 Command => ____________________________________________________________
Enter-PF1---PF2---PF3---PF4---PF5---PF6---PF7---PF8---PF9---PF10--PF11--PF12---
      Help  Add   End         Save        Up    Down                    Menu
```

3. Enter the values for the fields described below.

## Field Descriptions: Master JCL Definition

Meaning of the fields:

 Copyright © Software AG 2003

| Field | Description |
|---|---|
| JCL Location | Type of JCL source. In a network definition, this field serves as default for the entire network. See also the subsection JCL Locations. |
| JCL Node | The JCL for the job is read from this node. The job is started on the executing node. The default is the value specified in the job network definition, which can be overwritten here. |
| File/Natlib | Storage type of the JCL corresponding to the job type.<br><br>For **Natural programs and dynamic JCL** (storage type NAT): the Natural library where the program or the variable JCL resides. The Natural library must reside in the **Entire Operations** FUSER system file and must not have the same name as the **Entire Operations** library.<br><br>For **VSE/ESA**: library and sub-library associated by a point (.).<br><br>For **all others**: the file name.<br><br>You can list the file or library names by entering "*" as a wildcard character. To list, for example, all file or library names beginning with XA, enter XA* in this field and press Enter. To get the complete list, just enter "*" in the field and press Enter.<br><br>You can select the desired library or file from this list. You can also delete the library or file from the list.<br><br>For **UNIX**: Be aware of upper and lower case. You may use environment variables and symbols within names. |
| Member | Name of the member containing the JCL (provided there is a JCL).<br><br>You can list the member names by entering "*" as a wildcard character. To list, for example, all member names beginning with XA, enter XA* in this field and press Enter. To get the complete list, just enter "*" in the field and press Enter. You can select the desired member from this list. You can also delete the member from the list.<br><br>You can also enter the name of a non-existing member, if, for example, no JCL has yet been defined for the job. **Entire Operations** tells you once, but but accepts the member name assuming a member with this name will be created.<br><br>Before activating a network and before starting a job, **Entire Operations** checks whether a member has been defined. If there is no member, an error message is issued. |
| Volser | VOLSER name of the file. Only required if the file has not been catalogued (**OS/390 only**). |
| Password | The file password if the file has been protected by a password. |
| defined | **yes** = a file password was defined.<br>**no** = no file password was defined. |

# Special PF Keys: Master JCL Definition

After having entered these objects in the Job JCL Definition (Master) window, you can press one of the PF keys to continue in one of the following ways:

| PF Key | Name | Function |
|---|---|---|
| PF4 | Edit | Edit the defined JCL File. |
| PF6 | Spec | Define special parameters for operating system specific job definitions. |
| PF7 | Symb | Display the symbol table specified in the Symbol Table field. You can define or change the symbol table. |
| PF8 | Impor | Import the job control (only master definitions). Allows to convert the JCL from an operating system file format (for example PDS, TXT) to Natural source format or a macro language format. |

 Copyright © Software AG 2003

# Editing JCL or Natural Programs

**To edit JCL of a standard operating system job or a Natural program for a NAT-type job**

1. Type **E** in the line command field of the selected job in the Job Maintenance screen.
2. Press Enter.

   The **Entire Operations** Editor screen appears with the first page of the JCL or Natural program in it, for example:

```
 EDIT:NATOP.V110.DEMO(DEMO1)--------------------------------Columns 001 072
====>                                                        SCROLL===> CSR
***** ****************************** top of data ******************************
00001 //SNDEMO1 JOB    SN,CLASS=G,MSGCLASS=X,MSGLEVEL=(1,1)
00002 //*
00003 //*  Entire Operations DEMO JOB - FIRST JOB IN NETWORK NET-1
00004 //*
00005 //*  THE PROGRAM 'SNABND' SETS THE CONDITION OR SYSTEM CODE,
00006 //*  WHICH IS PASSED TO IT AS PARAMETER.
00007 //*  EACH STEP PRODUCES ANOTHER RETURNCODE.
00008 //*
00009 //STEP01   EXEC  PGM=SNABND,PARM='C0000'
00010 //STEPLIB  DD    DSN=NATOP.V110.LOAD,DISP=SHR
00011 //STEP02   EXEC  PGM=SNABND,PARM='C0004'
00012 //STEPLIB  DD    DSN=NATOP.V110.LOAD,DISP=SHR
00013 //STEP03   EXEC  PGM=SNABND,PARM='C0008'
00014 //STEPLIB  DD    DSN=NATOP.V110.LOAD,DISP=SHR
00015 //STEP04   EXEC  PGM=SNABND,PARM='C0012'
00016 //STEPLIB  DD    DSN=NATOP.V110.LOAD,DISP=SHR
00017 //STEP05   EXEC  PGM=SNABND,PARM='S000'
00018 //STEPLIB  DD    DSN=NATOP.V110.LOAD,DISP=SHR
Enter-PF1---PF2---PF3---PF4---PF5---PF6---PF7---PF8---PF9---PF10--PF11---PF12
      Help        End   Quit  Rfind Rchan Up    Down        Left  Right  Curso
```

Alternatively, you can invoke the Editor by pressing PF4 (Edit) from the Master Job Definition window when defining or modifying a job definition.

You can edit and scroll the JCL or Natural program using Editor commands and PF keys, even if the original definition was written outside **Entire Operations** with another editor.

If the selected job has no JCL or Natural program defined, a blank Editor screen appears and you can use Editor commands and PF keys to define JCL or Natural program. You can also write or edit the object using editors available at your installation outside of **Entire Operations**.

You can also use the Editor function to display and browse through JCL or a Natural program. To leave the object unchanged and exit the Editor, press PF4 (Quit).

For a full description of the **Entire Operations** Editor and all available special commands, see the **Software AG Editor Documentation**.

**Notes:**

1. **Automatic Logon to the Operating System Server**
   Before a JCL is edited, Entire Operations checks whether the user may access the JCL file.
   If it is an operating system file, then an automatic logon with the defined JCL Userid (BS2000/OSD and Unix and Windows) will be carried out, if required.
   If this automatic logon does not function (e.g., if a password is required), then this will be displayed to the user. In this case, he must first logon to the corresponding operating system server.

2. **VSE/ESA: Editing JCL from VSE/ESA/Power RDR**
   You can edit a unique member with DISP=L only. After issuing the SAVE command, the edited member is submitted to the RDR queue. The old member is deleted. If you create a new member, a default JOB statement is created.
3. **Windows: File Names**
   File names in Windows can be written in an alternative notation, if the backslash character ( \ ) is not available, like in mainframe environments.
   See File Names under Windows.
4. **UNIX and Windows: Text Files**
   If a file to be edited or loaded as JCL is not a text file, the error message **'EOR0325 - No Text File'** is returned.
   For JCL loading, this is treated as a permanent error.
5. **Usage of Text Modules within JCL**
   You can include text modules in your JCL, even if the job is not of type MAC (Macro). This can be done recursively, and by the usage of parameters. For more details, read the subsection Inserting Text Modules into the JCL in the section Dynamic JCL Generation.

 Copyright © Software AG 2003

# Editing JCL of Macro Jobs

This subsection covers the following topics:

- Editing JCL of Macro Jobs
- Natural Source Lines
- Parameter List
- Insertion of Text Members and Symbols in Local Variables
- Special Editor Commands
- Special PF Keys
- Run Number Being Used for the TEST Command

---

## Editing JCL of Macro Jobs

**To edit JCL of a job of type MAC (Macro):**

1. Type **E** in the line command field of the selected job of type MAC in the Job Maintenance screen.
2. Press Enter.

   The **Entire Operations** Editor screen appears with the first page of the JCL or Natural program in it, for example:

```
EDITNAT:EOR-T411(E60-M02)->Subprogram->Struct->Esc:'§'-------- Columns 001 072
====>                                                          SCROLL===> CSR
***** ***************************** top of data ****************************
00010 § DEFINE DATA PARAMETER USING NOPXPL-A
00020 § LOCAL                   /* LOCAL VARIABLES START HERE
00030 § 1 L-DUMMY     (A01)     /* LEAVE IT NOT EMPTY
00040 § 1 L-JOBNAME   (A10)
00050 § 1 L-I         (I02)
00060 § END-DEFINE
00070 § MOVE P-JOB TO L-JOBNAME
00080 § EXAMINE L-JOBNAME FOR '-' DELETE
00090 //§L-JOBNAME JOB ,§P-OWNER,CLASS=§CLASS,
00100 //         MSGCLASS=§MSGCLASS,MSGLEVEL=(1,1)
00110 //*
00120 //*  ENTIRE OPERATIONS EXAMPLE JOB ON §*DATN
00130 //*
00140 //JOBLIB   DD    DISP=SHR,DSN=§JOBLIB
00150 //*
00160 § FOR L-I = 1 TO 10
00170 //STEP§L-I EXEC  PGM=IEFBR14
00180 //SYSPRINT DD    SYSOUT=*
```

Alternatively, you can invoke the Editor by pressing PF4 (Edit) from the Master Job Definition window when defining or modifying a job definition.

You can edit and scroll the JCL or Natural program using Editor commands and PF keys, even if the original definition was written outside **Entire Operations** with another editor.

If the selected job has no JCL or Natural program defined, a blank Editor screen appears and you can use Editor commands and PF keys to define JCL or a Natural program. You can also write or edit the object using editors available at your installation outside of **Entire Operations**.

You can also use the Editor function to display and browse through JCL or a Natural program. To leave the object unchanged and exit the Editor, press PF4 (Quit).

For a full description of the **Entire Operations** Editor and all available special commands, see the **Software AG Editor Documentation**.

# Natural Source Lines

Natural source lines must be preceded by the activation escape character of the job.

# Parameter List

Each JCL for a job of type MAC must start with the declaration of the common user routine parameter list NOPXPL_A. The parameter P-CALL-PLACE will contain ‡MACŸ:

```
§ DEFINE DATA PARAMETER USING NOPXPL-A
```

The first character (here: §) is the activation escape character of the job.

# Insertion of Text Members and Symbols in Local Variables

Please see Dynamic JCL Generation to find more details about special MACRO JCL commands.

# Special Editor Commands

| | |
|---|---|
| MACRO | Compile the Macro JCL into an executable Natural object. This object will be executed by Entire Operations during JCL load. It will generate the executable active JCL. (This command is similar to STOW for standard Natural programs.) |
| TEST | Perform MACRO implicitly, then run the generated object for testing purposes. The generated JCL will show up in a new window. |

Please see Dynamic JCL Generation to find more details about special editor commands.

# Special PF Keys

| Special PF Key | Description |
|---|---|
| PF4 Symbols | Displays the symbol table, which is defined for this job. |

# Run Number Being Used for the TEST Command

The reserved run number used during the TEST command is **3**.
During TEST, a temporary active symbol table with this run number will be used.
This avoids any influence on the defined master symbol table.
In the log display, this reserved run number will **not** be displayed.

 Copyright © Software AG 2003

# Importing JCL to Natural Source

This subsection covers the following topics:

- Reasons for Importing JCL to a Natural Library
- Accessing the Function
- Field Descriptions: JCL Import from File to Natural Source

---

## Reasons for Importing JCL to a Natural Library

**Entire Operations** can read JCL from various origins. A facility is provided for copying JCL from other locations into a Natural library. If the required JCL should remain in its original location, the function described in this subsection must not be used.

**Note:**
JCL Location in Master Job Definition window must be set to NAT.

Importing JCL to a Natural library may be required for one of two reasons:

- Your job definition specifies JOB-type job with JCL location NAT and the required JCL is in any operating system file. This function copies the JCL into a Natural library unchanged;
- You wish to migrate standard JCL to **Entire Operations**' dynamic JCL format, when you define a MAC-type job and JCL location NAT. The parameter section for dynamic JCL generation is automatically inserted at the head of the otherwise unchanged JCL. The Natural source thus created can be modified to take full advantage of dynamic JCL such as parameter substitution, dynamic code generation, etc.

**Note:**
The Editor command MACRO is always required to compile dynamic JCL into internal code. It must be used after the import to make the MACRO-type JCL executable. The MACRO JCL can be tested with the Editor command TEST.

## Accessing the Function

**To invoke this function**

- Press PF8 (Impo) from the Master Job Definition window.

  The following window opens:

```
 15.11.01               *** Entire Operations 4.1.1 ***               15:11:01
 Owner SN                       Job Maintenance             Network DEMO-NET
  +-------------------------------------------------------------------------+---
  !                                                                         !r
  !                         Master Job Definition                           !
  ! +-----------------------------------------------------------------------+
  ! !                                                                       !
  ! !               JCL Import from File to Natural Source                  !
  ! !                                                                       !
  ! !  From                                                                 !
  ! !  Location ==> PDS                              Node ==> 148 MVS/XA    !
  ! !  File     ==> ____________________________________________________   !
  ! !  VSE Lib  ==> ________ Sublib ==> ________ VSAM Cat ==> ________      !
  ! !  Member   ==> ________   Type ==> ________   Volser ==> ______        !
  ! !  LMS Member                                Password ==>               !
  ! !  ==> ____________________________________________________________    !
  ! !  Member Version ==> ________________________                          !
  ! !  To                                                                   !**
  ! !  Library ==> NOP-JA                                                   !
  ! !  Member  ==> DYN01                 Overwrite (y/n) ==> N              !g
  + !                                                                       !
Ent !  Enter Continue   PF3 End                                             !--
    +-----------------------------------------------------------------------+
```

# Field Descriptions: JCL Import from File to Natural Source

The input fields of the JCL Import from File to Natural Source window are described in the following table:

 Copyright © Software AG 2003

| Field | Description |
|---|---|
| From ... | |
| Location | Enter JCL location (see subsection JCL Locations). |
| Node | Enter node of the file containing the JCL to be imported. |
| File | Enter name of the file containing the JCL to be imported. |
| VSE/ESA Lib | Enter the name of the VSE/ESA library within the selected file. |
| Sublib | Enter the name of the VSE/ESA sublibrary within the selected file. You can use an asterisk * as wildcard to open a selection window. |
| VSAM Catalog | Enter the name of the VSAM catalog for the selected file. |
| Member | Enter the name of the member where the JCL for the job resides. You can use an asterisk * as wildcard to open a selection window. |
| Type | **BS2000/OSD/LMS:** Enter the LMS member type. Possible values: S, J, D, X.<br>**DOS/VSE:** Enter the member type of the VSE/ESA library. |
| Volser | Enter the volume serial number of the file where the JCL resides. This is a **required parameter for VSE/ESA**. |
| Password (optional) | You can enter a password here, if the file is password-protected.<br>**BS2000/OSD:** Only the first 4 bytes are used as Read password (alphanumeric only). |
| LMS Member | This field can be used specially for long member names. If the JCL location is LMS and you leave this field **blank**, the short member field is used. (**BS2000/OSD only**) |
| Member Version | Enter the version of the specified LMS member. This must be exactly the same as given in LMS itself. Leading zeroes must be specified in the same way. (**BS2000/OSD only**) |
| To ... | |
| Library | Enter name of library containing member in which the imported JCL is to be stored. |
| Member | Enter name of member in which the imported JCL is to be stored. |
| Overwrite (y/n) | Enter **y** (yes), if you want existing JCL in the specified member to be overwritten. Default is **n** (no): an existing member is not overwritten. |

- Enter the origin File and Member names in the fields under the heading From
  (enter Volser, only if the file is not cataloged).
  You can use an asterisk * as wildcard to open a selection window with file names.
- Enter the target Natural Library and Member name in the fields under the heading To.
- Press Enter.
- If the target member **does not** already **exist**, the function is performed.

  If the target member already **exists**:

  - and you entered **y** for the Overwrite? option, the existing member is overwritten;
  - and you entered **n** for the Overwrite? option, the member is not overwritten and the message appears:

```
Overwrite Option required for existing JCL
```

# Pregeneration of Active JCL

This subsection covers the following topics:

- Pregenerating Active JCL to Be Used for Job Submission
- Special PF Keys: Active JCL Pregeneration

## Pregenerating Active JCL to Be Used for Job Submission

For performance reasons, it might be necessary to pregenerate active JCL to be used for the job submission. This function is conceived mainly for MAC-type jobs, whose dynamic JCL generation can become time-consuming, because macro language must be always be executed. JCL can also be pregenerated for all other job types. For further information, see the subsection Dynamic JCL Generation in the section System Overview.

**To pregenerate active JCL**

1. Type **G** in the line command field of the selected job in the Job Maintenance screen.
2. Press Enter.

   The following window opens:

```
 15.11.01              *** Entire Operations 4.1.1 ***              10:30:08
  +-------------------------------------------------------------+ R-169066
  !                                                             ! ----------
  !                   Active JCL Pregeneration                  !     Member
  !                                                             !
  !  Owner SN         Network R-169066   Job J-1                !   JC117573
  !                                                             !
  !  Due to performance reasons, it is possible to pregenerate  !
  !  active JCL, which will be used for the job submission.     !
  !                                                             !
  !  Warning:                                                   !
  !  Please use this function always after                      !
  !  - you modified the definition of the JCL location,         !
  !  - you edited the master JCL,                               !
  !  - you modified the linked Symbol Table.                    !
  !                                                             !
  !  Please proceed with one of the following PF Keys:          !
  !    PF3    End                                               ! **********
  !    PF4    Edit pre-generated JCL                            ! ources
  !    PF5    Pre-generate active JCL                           ! U Add.Log
  !    PF6    Remove pre-generated active JCL                   ! ___
E !                                                             ! 1--PF12---
  +-------------------------------------------------------------+    Menu
```

## Special PF Keys: Active JCL Pregeneration

 Copyright © Software AG 2003

| Key | Name | Function |
|---|---|---|
| PF4 | - | Press this key to edit pregenerated JCL with the **Software AG Editor**. |
| PF5 | - | Press this key to pregenerate the active JCL. The message Function performed appears in the upper left of the window. |
| PF6 | - | Press this key to delete the pregenerated JCL. The message Object deleted appears in the upper left of the window. |

Press PF3 (End) to return to the Job Maintenance screen.

# Input Condition Maintenance

Jobs within a job network are linked by user-defined **logical conditions**. During execution of networks and submission of jobs, **Entire Operations** automatically checks the status of logical conditions and triggers System actions accordingly. Alternatively, logical conditions can be set by an API routine.

This section covers the following topics:


- Invoking Input Condition
- Adding a Master Input Condition
- Modifying an Input Condition Definition
- Deleting an Input Condition Definition
- Input Condition: User Routine
- Input Condition: Multiple Suffixes
- Input Condition: File Existence
- Input Condition: Mailbox
- Input Condition: User Switch - BS2000/OSD
- Input Condition: Symbol Value
- Input Condition: Job Variable - BS2000/OSD
- Global Conditions
- Input Condition References
- Restrictions for Global Conditions
- Schedule Dependency for Input Condition
- Editing Input Condition User Routines
- Jobs Linked to Input or Output Condition
- Displaying Currently Active Conditions


 Copyright © Software AG 2003

# Input Condition

This subsection covers the following topics:

- Input Condition Maintenance
- Column Headings
- Line Commands
- Special PF Keys

---

## Invoking the Input Condition Maintenance

In order to link two jobs, an input condition (prerequisite) defined for one job must also be defined as output (end-of-job) condition for the preceding job. This subsection tells you how to define and maintain input conditions.

**To invoke the Input Condition Maintenance facility**

1. Select option **1** on the Main Menu to display the Network Maintenance screen.
2. Issue the line command **L** for the network containing the job to be linked.
3. Type **I** in the line command input field of the job with which you wish to associate the input condition.
4. Press Enter.

   The Input Condition Maintenance screen appears:

```
 18.11.01               *** Entire Operations 4.1.1 ***              16:49:59
 Owner SN                 Input Conditions Maintenance          Job JOB-02
 Network BIG-1
-------------------------------------------------------------------------------
 C Condition           Reference Type       Sched.Dep.  U ex. Library  User Rtn
 _ E60-J015-O           RUN      true                     Y
 _ E60-J019-O           RUN      true                     Y
 _
 _
 _
 _
 _
 _
 _
 _
 ******************************** Bottom of data ********************************
 D Delete  E Edit User Routine  M Modify  S Sched.Dep. W Where used


 Command => ____________________________________________________________________

Enter-PF1---PF2---PF3---PF4---PF5---PF6---PF7---PF8---PF9---PF10--PF11--PF12---
      Help  Add   End   ACond Save        Up    Down                    Menu
```

## Column Headings

The following table explains the column headings for the data listed on the Input Condition Maintenance screen:

| Column | Description |
|---|---|

| | | |
|---|---|---|
| C | One-character line command input field. The options are listed in the command section of the Input Condition Maintenance screen. See also Line Commands. | |
| Condition | User-defined condition name. See also Global Conditions. | |
| Reference | Reference date used to refer to a certain occurrence of the input condition. For more information, see the subsection Input Condition References. | |
| Type | Denotes user-defined condition type expressed as any of the following: | |
| | **destruct.** | Condition will be destroyed after use. |
| | **dummy** | If the condition is satisfied, the job is started as a temporary dummy job. |
| | **exclusive** | Exclusive use of condition. |
| | **extern +** | Condition from another network must exist. |
| | **extern -** | Condition from another network must not exist. |
| | **false** | Condition must not exist for job to be submitted. |
| | **File +** | File must exist. |
| | **File -** | File must not exist. |
| | **Job Var.** | Condition depends on a job variable (**BS2000/OSD only**). |
| | **Mailbox +** | Condition must exist; prompted in mailbox. |
| | **Mailbox -** | Condition must not exist; prompted in mailbox. |
| | **Recov.tmp.** | Condition is used for recovery (temporary - created by **Entire Operations** Monitor; for active jobs only). |
| | **Symbol** | Condition depends on the value of a symbol in a symbol table. |
| | **true** | Condition must exist for job to be submitted. |
| | **User Rtn** | Condition depends on user routine result. |
| | **User Sw +** | User Switch must exist. |
| | **User Sw -** | User Switch must not exist. |
| Sched Dep | If the condition is defined to be schedule-dependent, a short summary of the dependency appears in this column. For more information, see the subsection Defining Schedule Dependency for an Input Condition. | |
| U | Usage. For active input conditions with schedule dependency only. One of the following values appears: | |
| | **Y** | Condition is being used for the current activation. |

 Copyright © Software AG 2003

| | | |
|---|---|---|
| | **N** | Condition is not being used for current activation. |
| | Schedule is always dynamically tested for this display. | |
| ex. | **Y** | The condition must exist. |
| | **N** | The condition must not exist. |
| Library | Natural library where the user routine resides. | |
| User Rtn | Natural user routine to set the condition (see the subsection Editing Input Condition User Routines). | |

# Line Commands

Use the following line commands to perform the described functions on any input condition listed on the Input Condition Maintenance screen:

| Cmd | Description |
|---|---|
| D | Delete an input condition definition. |
| E | Edit user routine to set input condition. |
| M | Modify input condition definition. |
| S | Add/Modify schedule dependency. For more information, see the subsection Defining Schedule Dependency for an Input Condition. |
| W | Display jobs for which the condition is used as input or output condition. |

# Special PF Keys

You can perform the following function from the Input Condition Maintenance screen using this PF key:

| Key | Name | Function |
|---|---|---|
| PF4 | ACond | Display list of currently active conditions. |

You can perform several functions on input conditions using line commands and PF keys. These functions are described in the following subsections.

# Adding a Master Input Condition

This subsection covers the following topics:

- Adding Master Input Condition for a Job
- Special PF Keys
- Field Descriptions

## Adding Master Input Condition for a Job

**To add a master input condition for a job**

- Press PF2 (Add) in the Input Condition Maintenance screen.

  A window opens in which you can define a new condition:

```
  23.01.02              *** Entire Operations 4.1.1 ***              16:39:46
 Owner S +-------------------------------------------------------------+ R14
 Network !                                                             !
-------- !              Master Input Condition Addition                ! ------
 C Condi !                                                             ! er Rtn
 _       !      Owner    ==> SN________                                !
 _       !    Network    ==> A-1_______                                !
 _       !  Condition    ==> COND-1______________      Run ==> _____   !
 _       !  Reference    ==> RUN_____                                  !
 _       !                                                             !
 _       !  Usage (mark with Y or N)                                   !
 _       !    Must Exist: Y   Exclusive: _    Destroy after usage: _   !
 _       !  Activation Mode     ==> N                                  !
 _       !                                                             !
 _       !  Depending on                                               !
 ******* !    User Routine      ==> _        Multiple Suffixes ==> _   ! ******
 D Delet !    File Existence    ==> _        Mailbox           ==> _   !
         !    User Sw.(BS2000)  ==> _        Symbol Value      ==> _   !
         !    Job Var.(BS2000)  ==> _                                  !
 Command !                                                             !
         ! -PF1---PF2---PF3-------PF5------------PF9---PF10---PF12--    !
Enter-PF ! Help  Add   End       Save           Xref  ScDep  Menu      ! F12---
      He +-------------------------------------------------------------+ enu
```

## Special PF Keys

You can perform the following functions from the Master Input Condition Addition / Modification window using these PF keys:

| Key | Name | Function |
|---|---|---|
| PF9 | Xref | Display the jobs for which the condition is defined as an input or output condition. The same window opens as if you had issued the W line command for the condition. For further information, see Displaying Jobs Linked to a Condition. |
| PF10 | ScDep | Define schedule dependency for an input condition. The same window opens as if you had issued the **S** line command for the condition. For further information, see Defining Schedule Dependency for an Input Condition. |

 Copyright © Software AG 2003

# Field Descriptions

The input fields in the Master Input Condition Addition / Modification window are described in the following table:

| Field | Description | |
|---|---|---|
| Owner | The job owner is assumed as the default. You can select a different owner. The field may contain symbols. | |
| Network | The job network is assumed as the default. You can select a different network. The field may contain symbols. | |
| Condition | Name assigned to the condition or resource. The condition name and its reference date uniquely identify an active condition. The field may contain symbols. See Global Conditions. | |
| | **Note:** | A global condition can be used across networks. If you want to add or modify a global condition, a global condition:<br>● has the prefix +;<br>● is assigned to the SYSDBA owner and network;<br>● has the reference ABS (absolute). |
| Run | Current run number (for active jobs only). | |
| Reference | Reference date to specify which occurrence of this definition the job uses. For more information, see the subsection Input Condition References. | |
| Usage/Must Exist | **Y** | Specifies that the condition must exist (be **true**) as a prerequisite to job submission. |
| | **N** | Specifies that the condition must not exist (be **false**) as a prerequisite for job submission. Alternatively, this field also controls the setting of the condition according to the existence or non-existence of a file specified in the Depending on/File Existence field (file or member in a file; see field description, below). |
| Usage/Exclusive | **Y** | Specifies that when this condition is in use, no other job can access this condition until it is free (job finished). |
| | **N** | Default. Any job can use the condition at any time. This feature is useful to prevent simultaneous execution of jobs with the same input conditions. |
| Usage/Destroy after usage | **Y** | Specifies that the condition is automatically reset after the job is submitted. |
| | **N** | Default.<br>Do not reset condition: later job runs can use this condition according to reference date. |
| Activation Mode | **A** | Input condition definition will always be activated (for job activations as well). |
| | **N** | Default.<br>Input condition definition will be activated for network activations only. |

| | |
|---|---|
| Depending on/ User Routine | If the condition is to be set by a user routine, enter any character and press Enter. A window opens in which you can enter the name of the routine and the name of the Natural library in which the user routine resides. For further information, see the subsections Input Condition Depending on User Routine and Editing Input Condition User Routines. |
| Depending on/ Multiple Suffixes | Enter any character and press Enter to define a symbol here. A window opens in which you can enter a symbol table name and symbol. See the subsection Input Condition Depending on Multiple Suffixes. |
| Depending on/ File Existence | Enter any character and press Enter to define an input condition dependent on the existence or non-existence of a file. A window opens in which you can enter the name of the file. See the subsection Input Condition Depending on File Existence. |
| Depending on/ Mailbox | Enter any character and press Enter to define a user prompt to a mailbox. A window opens in which you can enter the name of the mailbox. See Input Condition Depending on Mailbox. |
| Depending on/ User Switch (BS2000/OSD only) | Enter any character and press Enter to define an input condition dependent on the existence or non-existence of a certain **user switch**. A window opens in which you can enter the name of the user switch. See the subsection Input Condition Depending on User Switch. |
| Depending on/ Symbol Value | Enter any character and press Enter to define an input condition dependent on a comparison with the value of a symbol in a symbol table. A window opens in which you can enter the symbol name and other parameters. See the subsection Input Condition Depending on Symbol Value. |
| Depending on/ Job Variable (BS2000/OSD) | Enter any character and press Enter to define an input condition dependent on a comparison with the contents of a BS2000/OSD **job variable**. See Input Condition Depending on Job Variable. |

1. Enter the input condition parameters in the Master Input Condition Addition window.
2. Press PF5 (Save) to save the definition.

   To add another input condition, press PF2. The Master Input Condition Addition window is cleared and you can enter a new input condition definition. You can add any number of input conditions for any one job.

3. Press PF3 (End) to return to the Input Condition Maintenance screen. All new input conditions appear in the main information section of this screen.

   If you defined a user routine to set the condition, you can edit the routine by using the line command **E** for the condition on the Input Condition Maintenance screen. For more information, see Editing Input Condition User Routines.

 Copyright © Software AG 2003

# Modifying an Input Condition Definition

**To modify an existing input condition definition**

1. Type **M** in the line command input field of the selected condition on the Input Condition Maintenance screen.
2. Press Enter.
3. The Master Input Condition Modification window (similar to the Addition window under Adding a Master Input Condition) containing the current values opens. You can now modify the parameters.
4. Press PF5 (Save) to save modified input condition.

# Deleting an Input Condition Definition

**To delete an existing input condition definition**

1. Type **D** in the line command input field of the selected condition on the Input Condition Maintenance screen.
2. Press Enter.
3. A window opens in which **Entire Operations** asks you to confirm the deletion by entering **Y**.
4. Enter **Y** and press Enter to delete the input condition definition.

   **Note:**
   After an input condition has been defined or modified, a loop check is performed for the network. The same conditions apply as described in the subsection Checking for a Loop in a Job Network in the section Network Maintenance, with one exception: if a loop is detected in the job flow, no corresponding message appears.

 Copyright © Software AG 2003

# Input Condition: User Routine

This subsection covers the following topics:

- Defining a User Routine
- Field Descriptions
- Special PF Keys

## Defining a User Routine

An input condition value can be determined by a user routine. This user routine is executed by the Monitor until the condition is satisfied. The user routine can perform any data base or Entire System Server call to obtain the necessary information. This allows **Entire Operations** to react to complex or user-specific dependencies.

**To define a user routine which sets the condition**

1. In the Master Input Condition Addition / Modification window, enter any character in the User Routine field under the Depending on heading.
2. Press Enter.

   The following window opens:

```
 18.11.01               *** Entire Operations 4.1.1 ***               16:49:59
 Owner SN                 Input Conditions Maintenance           Job JOB-02
 Network +-------------------------------------------------------------+
-------- !                                                              !-------
 C Condi !               Master Input Condition Addition                !ser Rtn
 _ E60-J !                                                              !
 _ E60-J !      Owner    ==> SN________                                !
 _       !    Network    ==> BIG-1_____                                 !
 _       !  Condition    ==> ghh-1_______________       Run ==> ____    !
 _       !  Reference    ==> ________                                   !
 _       !          +-----------------------------------------+         !
 _       !  Usage ( !                                       !         !
 _       !    Must  !      Input Condition User Routine       !e: _     !
 _       !          !                                       !         !
 _       !  Dependi !  Condition ==> GHH-1                   !         !
 ******* !    User  !        Run ==>                          !=> _     !*******
 D Delet !    File  !                                       !=> _     !
         !    User  !  Value will be determined by            !         !
         !    Job V !           NATURAL Library ==> ________  !         !
 Command !          !              User Routine ==> ________  !         !
         ! -PF1---P !                                       !12--     !
Enter-PF !  Help  A !  PF1 Help PF3 End           PF9 Delete  !nu       !PF12---
      He +--------- +-----------------------------------------+-------+Menu
```

   In this window you can enter the name of the user routine and the name of the Natural library in which the user routine resides.

3. When finished, press PF3 (End) to save data and return to the Master Input Condition Addition / Modification window.

# Field Descriptions

The input fields are described in the following table:

| Field | Description |
|---|---|
| Natural Library | Enter the name of the Natural library where the user routine resides. This library must be different from the **Entire Operations** system library. |
| User Routine | Enter the name of the user routine, which sets the condition. The user routine coding must start with DEFINE DATA PARAMETER USING NOPXPL-A. For further information, see Common User Routine Parameter Area NOPXPL-A. |

See also the subsection Editing Input Condition User Routines.

# Special PF Keys

You can perform the following function from the Input Condition User Routine window using this PF key:

| Key | Name | Function |
|---|---|---|
| PF9 | Delete | Delete input condition dependent on user routine. |

**Note:**
The Entire Operations Monitor sets the parameter field P-RC (Return Code) to zero before the user routine is called.

 Copyright © Software AG 2003

# Input Condition: Multiple Suffixes

This subsection covers the following topics:

- Input Condition: Multiple Suffixes
- Field Descriptions
- Special PF Keys

---

## Input Condition: Multiple Suffixes

If you define a symbol here, its contents are separated and the single fields are concatenated to the active condition name. These multiple conditions are used to wait until all parallel executing predecessors are finished.

The active conditions are created during activation of the job network. For example, if the condition name is COND and if the specified symbol contains 001003012, the active conditions COND001, COND003 and COND012 are created.

**To define an input condition dependent on multiple suffixes**

1. In the Master Input Condition Addition / Modification window, enter any character in the Multiple Suffixes field under the Depending on heading.
2. Press Enter.

   The following window opens:

```
 03.01.02                *** Entire Operations 4.1.1 ***               15:02:09
 Owner S +-------------------------------------------------------------+
 Network !                                                             !
-------- !             Master Input Condition Modification             ! ------
 C Condi !                                                             ! er Rtn
 m JM1-O !      Owner    ==> SN________                               !
 _       !    Network    ==> MULT-1____                                !
 _       !  Condition    ==> JM1-OK-______________      Run ==> _____  !
 _       !  Reference    ==> RUN_____                                  !
 _       !                                                             !
 _       !  Usage  +-----------------------------------------------------+
 _       !    Must !                                                    !
 _       !  Activa !           Input Condition: Multiple Suffixes      !
 _       !         !                                                   !
 _       !  Depend !  Condition ==> JM1-OK-                            !
 ******* !    User !        Run ==>                                    !
 D Delet !    File !                                                   !
         !    User !  Suffixes will be taken from                      !
         !    Job  !  Symbol Table ==> MULT-1____    always Job Table ==> N  !
 Command !         !  Symbol       ==> A1__________________           !
         ! -PF1--- !                                                   !
Enter-PF !  Help   !  PF1 Help PF3 End PF5 Save PF7 Symbols PF9 Delete !
      He +-------- +-----------------------------------------------------+
```

   In this window you can enter a symbol table name and symbol.

3. When finished, press PF3 (End) to save data and return to the Master Input Condition Addition / Modification window.

# Field Descriptions

The input fields are described in the following table:

| Field Name | Description | |
|---|---|---|
| Symbol Table | Enter the name of the symbol table. You must specify the same symbol table in the predecessor job definition. | |
| Symbol | Enter the symbol. You must specify the same symbol in the predecessor job definition. | |
| always Job Table | **Y** | The multiple suffix is always taken from the job symbol table. A local definition will be ignored. (Default) |
| | **N** | Use the symbol table defined here. |
| | **Note:**<br>In case of a job or network copy, it is recommended to set this field to **Y**. By this you make sure that always the defined symbol table of the job will be used, even if it was changed in the job definition. | |

# Special PF Keys

You can perform the following functions from the Input Condition Multiple Suffixes window using these PF keys:

| Key | Name | Function |
|---|---|---|
| PF7 | Symbols | List symbols in Symbol Table. |
| PF9 | Delete | Delete input condition dependent on multiple suffixes. |

 Copyright © Software AG 2003

# Input Condition: File Existence

This subsection covers the following topics:

- Input Condition: File Existence
- Field Descriptions
- Special PF Keys

---

## Input Condition: File Existence

An input condition value can be dependent on the existence or non-existence of a file or of one of its members. The Monitor checks for the file or member on the job's execution node until the condition is satisfied.

**Notes**

1. **BS2000/OSD:**
   The condition is satisfied only if the file is closed. For opened BS2000/OSD files, the condition is **not** satisfied.
2. **Migrated (archived) Files:**
   Migrated (archived) files are recognized like standard existing files.
   If a member is included in the file existence check, the active job will be set to a permanent error, with the error text 'Prerequisite File Check - Library containing <member> is archived'.

**To define such an input condition**

1. In the Master Input Condition Addition / Modification window, enter any character in the File Existence field under the Depending on heading.
2. Press Enter.

   The following window opens:

```
 18.11.01               *** Entire Operations 4.1.1 ***              17:03:19
 Owner SN                 Input Conditions Maintenance           Job JOB-02
 Network +-------------------------------------------------------------+
-------- !                                                              !-------
 C Condi !               Master Input Condition Addition                !ser Rtn
 _ E60-J !                                                              !
 _ E60-J !      Owner    ==> SN________                                !
 _       !    Network    ==> BIG-1_____                                 !
 _       !  Condition    ==> ghh-1_______________       Run ==> ____    !
 _  +-------------------------------------------------------------------+
 _  !                                                                   !
 _  !                Input Condition depending on File                  !
 _  !                                                                   !
 _  !  Condition ==> GHH-1                                              !
 _  !        Run ==>                                                    !
 ** !                                                                   !***
 D  !  Condition will be set to true, if on node 146                    !
    !     File ==> ____________________________________________________ !
    !   Member ==> __________                                           !
 Co !   exists ==> Y              (Y/N)                                 !
    !                                                                   !
Ent !  PF1 Help     PF3 End                           PF9 Delete       !---
    +-------------------------------------------------------------------+
```

In this window you can enter a file and member name.

3. When finished, press PF3 (End) to save data and return to the Master Input Condition Addition / Modification window.

# Field Descriptions

The input fields are described in the following table:

| Field | Description |
|---|---|
| Condition ... node | This is the operating system server on which the file's existence is to be checked. The node used for the file check is always the jobŸs execution node. |
| | **Tip:**<br>If you must check a file on a **different node**, first create an additional dummy job, whose execution node is the same as the node with which the file is to be checked. This dummy job must be a predecessor of the ‡mainŸ job. |
| File | Enter name of the file that must or must not exist. If the file is not cataloged, specify the volume serial number in the format <file>/<volume>. |
| | **Note:**<br>When entering file name, remember to observe the rules for upper and lower case which are specific to some operating systems. |
| Member (optional) | If the input condition is dependent on the existence or non-existence of a **member** in the file specified in the File field, enter the member name. |
| < | **Note:**<br>Only specify a member where necessary and possible. If this field is left **blank**, the existence of the whole file is checked. |
| exists | Enter **Y**, if the file (or member) must exist as a prerequisite to job submission.<br>Enter **N**, if the file (or member) must not exist as a prerequisite. |

# Special PF Keys

You can perform the following function from the Input Condition depending on File window using this PF key:

| Key | Name | Function |
|---|---|---|
| PF9 | Delete | Delete input condition depending on file. |

## Variable File Name

The fields File and/or Member can contain symbols preceded by an activation escape character. Symbol replacement is performed during the first existence check. The symbols are taken from the active symbol table assigned to the job. A missing symbol causes a permanent error.

Symbol replacement can be used for:

- file generation groups;
- changing input files;

 Copyright © Software AG 2003

etc.

After a successful symbol replacement, these fields will contain the replaced value in the **active** job. This reduces the effort with symbol replacements.

# Input Condition: Mailbox

This subsection covers the following topics:

- Mailboxes
- Using Mailboxes with Input Conditions
- Defining the Input Condition
- Field Descriptions
- Special PF Keys

---

## Mailboxes

Mailboxes are defined to the system and assigned to user IDs by using the System Administrator Services option on the Main Menu. For more information on defining mailboxes, see the Entire Operations Administration Documentation. For more information on how mailboxes can be used, see the section Mailboxes.

## Using Mailboxes with Input Conditions

Each logical condition can be assigned to a mailbox.

- If the condition is the **only one** pending (unfulfilled) and is therefore delaying the start of the subsequent job, a message is automatically sent to the mailbox.
- If an input condition is dependent on manual action(s), a message is sent to a mailbox that prompts a user to confirm completion of the action(s).

Each user linked to this mailbox sees this prompt whenever the Main Menu or the Active Jobs screen is invoked. A user can confirm the prompt by setting or resetting the requested condition. The condition will be set, only if a user confirms the condition setting in the mailbox list.

A user can be associated with up to ten mailboxes.

## Defining the Input Condition

**To send a user prompt to a mailbox for an input condition that is not satisfied during network execution**

1. In the Master Input Condition Addition / Modification window, enter any character in the Mailbox field under the Depending on heading.
2. Press Enter.

   The following window opens:

 Copyright © Software AG 2003

```
 18.11.01               *** Entire Operations 4.1.1 ***               17:03:19
 Owner SN                 Input Conditions Maintenance           Job JOB-02
 Network +-------------------------------------------------------------+
-------- !                                                              !-------
 C Condi !                Master Input Condition Addition               !ser Rtn
 _ E60-J !                                                              !
 _ E60-J !      Owner    ==> SN________                                 !
 _       !    Netwo +-----------------------------------------+         !
 _       !  Conditi !                                       !> ____    !
 _  +--- !  Referen !   Input Condition: User Interaction     !         !---+
 _  !    !          !                                       !         !   !
 _  !    !  Usage ( !  Condition ==> GHH-1                   !         !   !
 _  !    !    Must  !        Run ==>                          !age: _   !   !
 _  !  C !          !                                       !         !   !
 _  !    !  Dependi !  If the condition is not satisfied     !         !   !
 ** !    !    User  !  during the network execution, it      ! ==> _   !   !***
 D  !  C !    File  !  is to be prompted at a mailbox.       ! ==> x   !   !
    !    !    User  !                                       !         !_  !
    !    !    Job V !                                       !         !   !
 Co !    !          !    Mailbox ==> __________             !         !   !
    !    ! -PF1---P !                                       !PF12--   !   !
Ent !  P !  Help  A !  PF1 Help PF3 End        PF9 Delete   !Menu     !   !---
    +--- +--------- +-----------------------------------------+---------+---+
```

In this window you can enter a mailbox name.

# Field Descriptions

The input field has the following meaning:

| Field Name | Description |
|---|---|
| Mailbox | Enter the name of the mailbox to which the prompt is to be sent. |

# Special PF Keys

You can perform the following function from the Input Condition User Interaction window using this PF key:

| Key | Name | Function |
|---|---|---|
| PF9 | Delete | Delete input condition depending on mailbox. |

**To list available mailboxes**

1. Type an asterisk * in the field labelled Mailbox in this window.
2. Press Enter.

   A window opens listing all mailboxes defined to **Entire Operations**:

```
 18.11.01           *** Entire Operations 4.1.1 ***            17:04:26
 Owner SN                 Input Conditions M +-------------------------+4
 Network +---------------------------------- !                         !
-------- !                                   !                         !-------
 C Condi !               Master Input Condit !                         !ser Rtn
 _ E60-J !                                   !   Mailbox Selection     !
 _ E60-J !      Owner    ==> SN________      !                         !
 _       !    Netwo +----------------------- !         ** Top **       !
 _       !  Conditi !                        !     _   GHH-BOX         !
 _       !  Referen !   Input Condition: Use !     _   DWI-BOX         !
 _       !          !                        !     _   DWI-BOX-02      !
 _       !  Usage ( !  Condition ==> GHH-1   !     _   EXPORT-BOX      !
 _       !    Must  !        Run ==>         !     _   HUGO            !
 _       !          !                        !     _   WKS-011         !
 _       !  Dependi !  If the condition is n !     _   X10             !
 ******* !    User  !  during the network ex !     _   X11             !*******
 D Delet !    File  !  is to be prompted at  !     _   X12             !
         !    User  !                        !     _   X13             !
         !    Job V !                        !                         !
 Command !          !    Mailbox ==> *______ !   --PF3---PF7--PF8---   !
         ! -PF1---P !                        !     End   Up   Down     !
Enter-PF !  Help  A !  PF1 Help PF3 End      +-------------------------+PF12---
      He +--------- +-----------------------------------------+---------+Menu
```

3. Select a mailbox by typing any character in the appropriate line command input field.
4. Press Enter.
5. The window closes and the selected mailbox name appears in the Mailbox field of the Master Input Condition Addition / Modification window.
6. When finished, press PF3 (End) to save data and return to the Master Input Condition Addition / Modification window.

 **Copyright © Software AG 2003**

# Input Condition: User Switch - BS2000/OSD

This subsection covers the following topics:

- Defining an Input Condition
- Field Descriptions
- Special PF Keys

## Defining an Input Condition

An input condition value can be dependent on the existence or non-existence of a user switch. The Monitor checks for the user switch on the job's execution node until the condition is satisfied.

**To define such an input condition**

1. In the Master Input Condition Addition / Modification window, enter any character in the User Switch field under the Depending on heading.
2. Press Enter.

   The following window opens:

```
 18.11.01               *** Entire Operations 4.1.1 ***              17:13:52
 Owner SN                 Input Conditions Maintenance           Job ESC-SYMB
 Network +-------------------------------------------------------------+
-------- !                                                              !-------
 C Condi !               Master Input Condition Addition                !ser Rtn
 _ HUGO  !                                                              !
 _       !      Owner    ==> SN________                                !
 _       !    Network    ==> BS2-EX-5__                                !
 _       !  Condition    ==> ghh-1_________________       Run ==> ____  !
 _       !  Refe +---------------------------------------------+       !
 _       !       !                                              !       !
 _       !  Usag !  Input Condition depending on User Switch   !       !
 _       !    Mu !                                              !e: _   !
 _       !       !  Condition ==> GHH-1                         !       !
 _       !  Depe !        Run ==>                               !       !
 ******* !    Us !                                              !=> _   !*******
 D Delet !    Fi !  Condition will be set to true, if           !=> _   !
         !    Us !       User Switch ==> _0                     !       !
         !    Jo !  of BS2000 Userid ==> ASF_____               !       !
 Command !       !            exists ==> Y        (Y/N)         !       !
         ! -PF1- !                                              !12--   !
Enter-PF !  Help !  PF1 Help PF3 End         PF9 Delete          !nu     !PF12---
      He +------ +----------------------------------------------+-------+Menu
```

   In this window you can enter a user switch and BS2000/OSD user ID.

3. When finished, press PF3 (End) to save data and return to the Master Input Condition Addition / Modification window.

# Field Descriptions

The input fields are described in the following table:

| Field | Description |
|---|---|
| User Switch | Number of a user switch. |
| of BS2000/OSD Userid | BS2000/OSD user ID to which the specified user switch belongs. |
| exists | Enter **Y**, if the user switch must exist as a prerequisite to job submission.<br>Enter **N**, if the user switch must not exist as a prerequisite. |

# Special PF Keys

You can perform the following function from the Input Condition depending on User Switch window using this PF key:

| Key | Name | Function |
|---|---|---|
| PF9 | Delete | Delete input condition depending on user switch. |

 Copyright © Software AG 2003

# Input Condition: Symbol Value

This subsection covers the following topics:

- Defining an Input Condition that depends on a Symbol Value
- Field Descriptions
- Special PF Keys
- Notes

---

## Defining an Input Condition that depends on a Symbol Value

An input condition can be dependent on a comparison with the contents of a symbol in a symbol table. The Monitor checks the value of the symbol on the job's execution node until the condition is satisfied.

**To define such an input condition**

1. In the Master Input Condition Addition / Modification window, enter any character in the Symbol Value field under the Depending on heading.
2. Press Enter.

   The following window opens:

```
 18.11.01               *** Entire Operations 4.1.1 ***               11:45:23
 Owner SN                 Input Conditions Maintenance           Job JOB-02
 Network +-------------------------------------------------------------+
-------- ! EOR0037 - Please enter the Condition Name                    ! ------
 C Condi !               Master Input Condition Addition                ! er Rtn
 _ E60-J !                                                              !
 _ E60-J !      Owner    ==> SN________                                !
 _       !    Network    ==> BIG-2_____                                 !
 _       !  C +-----------------------------------------------------+   !
 _       !  R !                                                     !   !
 _       !    !   Input Condition depending on Symbol Value         !   !
 _       !  U !                                                     !   !
 _       !    !  Condition ==> SYM1                                 !   !
 _       !    !                                                     !   !
 _       !  D !  Condition will be set to true, if Symbol           !   !
 ******* !    !  ____________________ in Symbol Table __________    !   ! ******
 D Delet !    !  at Position __ in Length __ with Format _          !   !
         !    !  is __                                              !   !
         !    !  ________________________________________           !   !
 Command !    !  ________________________________________           !   !
         ! -P !                                                     !   !
Enter-PF !  H !  PF1 Help PF3 End                  PF9 Delete        !   ! F12---
      He +--- +-----------------------------------------------------+ --+ enu
```

   In this window you can enter the symbol to be compared and further parameters to specify the symbol.

3. When finished, press PF3 (End) to save data and return to the Master Input Condition Addition / Modification window.

# Field Descriptions

The input fields of the Input Condition depending on Symbol Value window are described in the following table:

| Field | Description | |
|---|---|---|
| Condition will be set to true, if Symbol | Enter the name of a valid symbol. | |
| in Symbol Table | Enter the name of a valid symbol table. If you leave this field blank, the active symbol table of the job is used. | |
| at Position | Enter position of symbol substring to be checked. Possible values: 1 through 80. (Checked only if in Format **A**.) | |
| in Length | Enter length of symbol substring to be checked. Possible values: 1 through 80. (Checked only if in Format **A**.) | |
| with Format | Enter format in which the symbol substring is to be checked against the comparison string. Possible values: | |
| | **A** | Alphanumeric |
| | **D** | Date in the format YYYYMMDD |
| | **L** | Alphanumeric; between comparison string and symbol value, an implicit lower-case character comparison is made. |
| | **N** | Numeric (zoned). |
| | **U** | Alphanumeric; between comparison string and symbol value, an implicit upper-case character comparison is made. |
| is xx | This is the comparison operator. Enter a logical operator for the comparison of the defined symbol substring against the comparison string below. Possible values: | |
| | = or **EQ** | Code is equal to specified value. |
| | >= or **GE** | Code is greater than or equal to specified value. |
| | > or **GT** | Code is greater than specified value. |
| | <= or **LE** | Code is lower than or equal to specified value. |
| | < or **LT** | Code is lower than specified value. |
| | **!=** or **NE** | Code is different from specified value. |
| (Comparison string) | Enter the string or field to be compared with the symbol substring. The strings are compared in the defined Format.<br><br>**Symbol replacement** is possible in this field.<br><br>● If an **activation escape character** is used, the replacement is performed once during activation.<br>A symbol replacement error will be treated as permanent error in this case.<br>● If a **submission escape character** is used, the replacement is performed directly before each prerequisite check. This causes more system overhead.<br>A symbol replacement error will be treated as temporary error in this case. | |

 Copyright © Software AG 2003

# Special PF Keys

You can perform the following function from the Input Condition depending on Symbol Value window using this PF key:

| Key | Name | Function |
|---|---|---|
| PF9 | Delete | Delete input condition dependent on symbol value. |

# Notes

## Symbol Search Order

If the symbol cannot be found in an active table with the given run, the master symbol table will also be searched.

# Input Condition: Job Variable - BS2000/OSD

This subsection covers the following topics:

- Defining an Input Condition
- Field Descriptions
- Special PF Keys

---

## Defining an Input Condition

An input condition can be dependent on a comparison with the contents of a BS2000/OSD job variable. The Monitor checks for the job variable on the job's execution node until the condition is satisfied.

**To define such an input condition**

1. In the Master Input Condition Addition / Modification window, enter any character in the Job Variable field under the Depending on heading.
2. Press Enter.

   The following window opens:

```
 18.11.01               *** Entire Operations 4.1.1 ***               17:13:52
 Owner SN                 Input Conditions Maintenance           Job ESC-SYMB
 Network +-------------------------------------------------------------+
-------- !                                                              !-------
 C Condi !                Master Input Condition Addition               !ser Rtn
 _ HUGO  !                                                              !
 _       !    +-------------------------------------------------------+
 _       !    !                                                         !
 _       !  C !   Input Condition depending on Job Variable Contents    !
 _       !  R !                                                         !
 _       !    !  Condition ==> GHH-1                                    !
 _       !  U !        Run ==>                                          !
 _       !    !                                                         !
 _       !    !  Condition will be set to true, if Job Variable         !
 _       !  D !  ____________________________________________________  !
 ******* !    !  at Position ___ in Length ___ with Format _            !*****
 D Delet !    !  is __                                                  !
         !    !  ____________________________________________________  !
         !    !  ____________________________________________________  !
 Command !    !                        (Optional) Read Password ==> ____  !
         ! -P !                                                         !
Enter-PF !  H !  PF1 Help PF3 End                PF9 Delete             !12---
      He +--- +-------------------------------------------------------+nu
```

   In this window you can enter a job variable and further parameters to specify the job variable.

3. When finished, press PF3 (End) to save data and return to the Master Input Condition Addition / Modification window.

 Copyright © Software AG 2003

# Field Descriptions

The input fields of the Input Condition depending on Job Variable Contents window are described in the following table:

| Field | Description | |
|---|---|---|
| Condition will be set to true, if Job Variable | Enter the name of a valid BS2000/OSD job variable.<br>● The job variable must exist at the time of the check. If it does not exist, the active job will be set to a permanent error status.<br>● If the job variable is specified without an explicit user ID, the job default BS2000/OSD user ID is used as prefix.<br>● Symbol replacement is performed in the name, if it contains the activation escape character at least once. | |
| at Position | Enter position of job variable substring to be checked. Possible values: 1 through 253. | |
| in Length | Enter length of job variable substring to be checked. Possible values: 1 through 253. | |
| with Format | Enter format in which the job variable substring is to be checked against the comparison string. Possible values: A alphanumeric, N numeric (zoned). | |
| is xx | This is the comparison operator. Enter a logical operator for the comparison of the defined job variable substring against the comparison string below. Possible values: | |
| | = or **EQ** | Code is equal to specified value. |
| | >= or **GE** | Code is greater than or equal to specified value. |
| | > or **GT** | Code is greater than specified value. |
| | <= or **LE** | Code is lower than or equal to specified value. |
| | < or **LT** | Code is lower than specified value. |
| | **!=** or **NE** | Code is different from specified value. |
| (Comparison string) | Enter the string or field to be compared with the job variable substring. The strings are compared in the defined **Format**.<br>The content of this field is compared with the substring of the job variable, or it is inserted into the substring of the job variable.<br>The content is treated as blank if 'or' was defined.<br>The comparison is made in the defined format. | |
| (Optional) Read Password | If the job variable is read password-protected, specify the password here. | |

# Special PF Keys

You can perform the following function from the Input Condition depending on Job Variable Contents window using this PF key:

| Key | Name | Function |
|---|---|---|
| PF9 | Delete | Delete input condition dependent on job variable contents. |

# Global Conditions

"Global" conditions exist once under the same name or they do not exist, as compared to "normal" conditions, which can have one occurrence per run number.

For the references of global input conditions, restrictions apply as compared to normal conditions. These are described in the following subsection Possible References for Conditions.

Global output conditions are always set with the reference ABS (absolute). The reference RUN is accepted, but is converted to ABS at runtime.

A global condition can be used across networks.

If you want to add or modify a global condition, the following applies:
A global condition:

- has the prefix +;
- is assigned to the owner SYSDBA and to the network SYSDBA;
- gets the reference ABS (absolute).

 Copyright © Software AG 2003

# Input Condition References

This subsection covers the following topics:

- References
- Possible References for Conditions
- Relative Values

## References

To check an input condition, you must know which reference is meant. References can result in time or run number intervals.

The simplest reference is RUN, which refers to conditions set in the current network run. However, if you define an external input condition (which is not produced by the current network), you should always remember that different networks usually have different run numbers, which implies that RUN makes no sense in this case.

Run numbers are **not** assigned sequentially in chronological order. For references to previous network runs use LNR.

## Possible References for Conditions

| Ref. | Unit of Relative Value | Description |
|---|---|---|
| AAC | | Job uses condition only if there is **at least one** entry in the active database for the owner, the network and the job. |
| ABS | | Job uses condition only if it is **absolute**. Absolute conditions are independent of run numbers and can exist only once under the same name. |
| ANY | | Job uses **any** occurrence of the condition, **except** ABS (absolute), which has a reserved run number. |
| ANT | | Job uses condition only if there is **no** entry in the active database for this owner, network and job. |
| DAT | Days | Job uses the condition as set by network run on the **current** date. |
| Date | | (in the format: YYYYMMDD) Job uses condition only if set on an **explicit** date. The job then uses the condition as set by the network run on this date (does not apply when job can run more than once daily). |
| DST | | Job uses the condition as set during network run on the **Date of job starting time**. |
| DUM | | If this condition is satisfied, the job is started as a temporary dummy job. If this condition is **not** satisfied, the job is started normally.<br>If several conditions with the reference DUM are defined for a job, only one condition must be satisfied for the job to be executed as a dummy. The condition can have a special dependency (for example, on a file).<br>The active condition will also be accepted, if it has the reference ABS (absolute).<br>If a job is started as a temporary dummy job on account of a condition, then this will be written to the log. |

| | | |
|---|---|---|
| HRC | Hours | Job uses the condition only if it was set a defined number of hours previous to the check time of the condition. This reference can only be entered with a relative hour value. |
| LNR | Hours | • If the condition was set by **another network**: The job uses the condition, if it was set by the **most recent** run in the previous <nnn> hours.<br>• If the condition was set by an earlier run of the **same network**: The job uses the condition, if it was set by an **earlier** run in the previous <nnn> hours.<br>• The condition is **not set**, if an error occurred during the most recent () or earlier run ().<br><br>This reference is recommended for constructing chains of networks and must be followed by a relative value (see Relative Values). |
| LNT | Hours | This reference is used like LNR. Additionally, the condition is set to true if the creating job network did not have an active occurrence in the time frame to be observed. |
| MON | Months | Job uses the condition as set by network run of the current month. |
| PDA | Days | Job uses the condition only if set on the same production date. The production date end time can be defined in the **Entire Operations** Defaults. |
| PDS | | Job uses the condition only if set on the same production date. The production date end time can be defined in the **Entire Operations** Defaults. |
| RUN | Run numbers | Job uses the condition as set by current network run (default). |
| WEK | Weeks | Job uses the condition as set by network run of the current week. |
| WCC | Days | Day in ’real time’, relative to the current day. |
| WCW | Days | Day in calendar (work day), relative to the current day. |
| WCS | Days | Day ins schedule, relative to the current day. |

With the exception of RUN, the described specifications also apply to global conditions.

# Relative Values

Some options can be followed by a minus sign (**-**) and a numeric offset. This is called a **relative value**. For example:

| Option | Explanation |
|---|---|
| DAT-1 | refers to yesterday |
| HRC-2 | refers to the previous 2 hours |
| WEK-1 | refers to the previous week. |

## Defaults for Input Condition References

If the Reference field in the Master Input Condition Addition window is left **blank** at definition, the following defaults are inserted:

| Default | Description |
|---|---|
| RUN | If the condition is from the same network. |
| HRC-24 | If the condition is from a different network. |

 Copyright © Software AG 2003

# Restrictions for Global Conditions

For global conditions only the following references are allowed:

| | |
|---|---|
| **With the definition of an active condition** | ABS, ANY, RUN |
| **If used as input condition** | HRC, DAT, PDA, WEK, MON, ABS, ANT, DUM, RUN, ANY |
| **If used as output condition** | ABS, RUN |

For a description of references see Possibles References for Conditions.

Copyright © Software AG 2003 

# Schedule Dependency for Input Condition

You can define an input condition that is not used on all activation dates of a job network. This can be done for the following reasons:

- A predecessor job or network does not run on all schedule dates of the successor job or network.
- Some predecessor jobs are also schedule-dependent.

**To define schedule dependency for an input condition**

1. Type **S** in the line command input field of the selected condition on the Input Condition Maintenance screen.
2. Press Enter.

   The Schedule Dependency Definition for Input Condition window opens:

```
 18.11.01               *** Entire Operations 4.1.1 ***               17:20:10
 Owner SN                 Input Conditions Maintenance           Job JOB4
 Network DEMO-NET
----------- +-------------------------------------------------------------+--
 C Conditio !                                                             !tn
 s JOB3-OK  !       Schedule Dependency Definition for Input Condition    !
 _          !                                                             !
 _          !  Owner   SN              Job       JOB4                    !
 _          !  Network DEMO-NET        Condition JOB3-OK                 !
 _          !                                                             !
 _          !  The Condition is to be checked only (+) / except (-),      !
 _          !  if the execution date has the following position in the   !
 _          !  job network schedule or calendar:                         !
 _          !                                                             !
 _          !        Usage ==> _  + only              - except            !
 ********** !                     A after Holiday too B before Holiday too  !**
 D Delete   !         Type ==> _  H is Holiday    X is Workday            !
            !                     C Calendar Day  W Workday  S Schedule Day !
            !    in Period ==> _  W Week          M Month    Y Year       !
 Command => !  at Position ==> ______                                     !
            !  ----PF1------PF3---------PF5------------------PF9----------- !
Enter-PF1-- !      Help     End         Save                 Delete       !--
      Help  +-------------------------------------------------------------+
```

3. The procedure is identical to defining schedule dependency for a job. For further information, see the subsection Schedule Dependency for a Job. For field descriptions, see here.

 Copyright © Software AG 2003

# Editing Input Condition User Routines

Input conditions can be set by user routines. If a user routine is defined for an input condition, **Entire Operations** automatically executes the routine when checking the status of input conditions before job submission.

In the normal case, user routines are Natural subprograms and are edited using the **Entire Operations** Editor.

**To use the user routine Editor**

1. On the Input Condition Maintenance screen, type **E** in the line command input field for a UsrRtn-type condition.
2. Press Enter.

   If the user routine already exists, the first page appears in the Editor screen.

3. If you are defining a new user routine, the parameter section appears in the Editor screen. You can only modify parameters by field redefinition.

You can now create or modify the user routine using Editor commands and PF keys. For a full description of the Editor, see the **Software AG Editor Documentation**.

Below is an example of a user routine to set an input condition:

```
* Entire Operations
* USER ROUTINE TO SET AN INPUT CONDITION
*
* THIS ROUTINE CHECKS THE EXISTENCE OF A FILE, DEPENDING ON
* GIVEN PARAMETERS
*
DEFINE DATA PARAMETER USING NOPXPL-A
LOCAL                   /* LOCAL VARIABLES START HERE
1 CATALOG VIEW OF CATALOG        /* An Entire System Server VIEW
  2 NODE
  2 DSNAME
  2 ERROR-CODE
  2 ERROR-TEXT
*
1 #DSNAME         (A54)
END-DEFINE
* ----------------------
RESET P-RC                /* ASSUME GOOD RETURN -> SET CONDITION
COMPRESS P-OWNER '.SYSF.SRCE' INTO #DSNAME LEAVING NO SPACE
CAT. FIND CATALOG WITH NODE = P-EXECUTION-NODE
    AND DSNAME = #DSNAME
  IF CAT.ERROR-CODE NE 0
    MOVE CAT.ERROR-CODE TO P-RC      /* BAD RETURN
    MOVE CAT.ERROR-TEXT TO P-RT
    ESCAPE ROUTINE
  END-IF
END-FIND        /* (CAT.)
END
```

All user routines finish with a return code that is returned in P-RC.

If P-RC is not equal to 0, the condition is reset (FALSE) and the user is notified with a message. In our example, if the routine finds a file with the string <OWNER>.SYSF.SRCE, the returned condition code (ERROR-CODE) sets (fulfills) the U-type input condition for which the routine was defined.

# Jobs Linked to Input or Output Condition

You can list jobs for which an existing condition is defined as an input or output condition.

**To do this**

1. Type **W** in the line command input field of the selected condition on the Input Condition Maintenance screen:
2. Press Enter.

   A window opens with the name of the selected condition and two lists of jobs:

   - one lists the jobs which use the condition as input condition;
   - the other lists the jobs which use the condition as output condition.

   The following figure shows an example display of job names for which a condition is defined. The jobs are listed according to owner, network and job name:

```
 18.11.01              *** Entire Operations 4.1.1 ***              17:24:01
 Owner SN                Input Conditions Maintenance          Job JOB4
 Network DEMO-NET
-------------------------------------------------------------------------------
 C Condition           Reference Type       Sched.Dep.  U ex. Library  User Rtn
 w JOB3-OK              RUN      true                      Y
 _
  +-----------------------------------------------------------------------+
  !                                                                       !
  !                      Condition: JOB3-OK                               !
  !  Output Condition of                  Input Condition for             !
  !  -----------------------------------+----------------------------------!
  !  Owner       Network     Job        !  Owner       Network     Job    !
  !  SN          DEMO-NET    JOB3       !  SN          DEMO-NET    JOB4   !
  !                                     !                                 !
  !                                     !                                 !
  !                                     !                                 !
  !                                     !                                 !
  !                                                                       !
  ! Enter-PF1---PF2---PF3---PF4---PF5---PF6---PF7---PF8---PF9---PF10-----  !
  !                   End                     Up    Down                  !
E +-----------------------------------------------------------------------+
      Help  Add   End   ACond Save        Up    Down                   Menu
```

3. Press PF3 (End) to close the window.

   **Note:**
   For active input conditions, the structure of this screen is a little bit diverging (see Active Conditions screen).

 Copyright © Software AG 2003

# Displaying Currently Active Conditions

**To display currently active conditions**

- Press PF4 (ACond) on the Input Condition Maintenance screen.

  The Active Conditions Screen appears:

```
 18.11.01               *** Entire Operations 4.1.1 ***              10:56:38
 Owner SN                      Active Conditions
-------------------------------------------------------------------------------
 Cmd Owner      Network    Condition Name       Date     Run    Status
     SN*------- *--------- *------------------- --------
  _  SYSDBA     SYSDBA     +J1-ABS              18.11.01  abs.  free
  _  SYSDBA     SYSDBA     +J1-OK               18.11.01     1  free
  _  SYSDBA     SYSDBA     +J1-OK               18.11.01     2  free
  _  SYSDBA     SYSDBA     +J2-IN               18.11.01  abs.  free
  _
  _
  _
  _
  _
  _
  _
  _
  _
-------------------------------------------------------------------------------
 D Delete   M Modify
 Command => ____________________________________________________________
Enter-PF1---PF2---PF3---PF4---PF5---PF6---PF7---PF8---PF9---PF10--PF11--PF12---
      Help  Add   End         Save        Up    Down                   Menu
```

For further information, see the subsection Maintaining Active Conditions in the section Active Job Networks.

# End-of-Job Checking and Actions - Overview

This section covers the following topics:

- List of End-of-Job Checking and Actions
- Kinds of End-of-Job Actions
- EOJ Checks for Various Operating Systems

---

## List of End-of-Job Checking and Actions


- End-Of-Job Actions with Execution as a Temporary Dummy Job
- End-of-Job Checking and Actions Facility
- Adding Event Definition for OS/390 or VSE/ESA Job
- Modifying Event Definition for OS/390 or VSE/ESA Job
- Adding Event Definition for BS2000/OSD Job
- Modifying Event Definition for BS2000/OSD Job
- Adding Event Definition for UNIX or Windows Job
- Modifying Event Definition for UNIX or Windows Job
- Deleting an Event Definition
- End-Of-Job Checking Defaults for various Operating Systems
- Creating Online Documentation for Events
- Adding Output Condition Definitions
- Modifying Output Condition Definitions
- Modifying or Setting Master or Active Symbols
- Displaying Output Condition Use
- Editing End-of-Job User Routines
- Defining Activation of Jobs or Job Networks
- Defining Recovery Action
- Sysout Actions
- Passing Files to Entire Output Management
- Message Sending
- Defining End-of-Job Action User Routine
- Defining Other Actions


---

Defining end-of-job checking and actions means instructing Entire Operations what actions to trigger after a job has terminated. The triggered action is referred to as an **end-of-job action**.

The end-of-job action depends on the status of the whole job or any other event which can be checked by Entire Operations on termination. The status of the job on termination is determined by the occurrence of certain events during job execution which Entire Operations can check.

Before Entire Operations can check for an event, it must be defined to the system, together with instructions as to the action to be triggered. If no events are specified, Entire Operations performs end-of-job checking automatically using system defaults.

Events are checked on a **check ok/check not ok** basis. End-of-job actions can be triggered by:

 Copyright © Software AG 2003

- the result of a single event check (for example: job step level in OS/390);
- the overall result of the end-of-job check, which **always** causes **either the event job ok or job not ok** to occur.

Both of these event definitions are **always** predefined for every job.

In the latter case, you can define two sets of actions:

- one set is performed if all checks finished **ok** (i.e. **job ok**);
- the other is performed if at least one check finished **not ok** (i.e. **job not ok**).

All actions are performed after the job has terminated.

# Kinds of End-of-Job Actions

Possible end-of-job actions are:

- Set/reset output conditions;
- Set/reset/modify a job variable (BS2000/OSD only)
- Execute an end-of-job action user routine.
- Define activation of jobs or job networks;
- Start a recovery;
- Handle job sysout;
- Pass output files to Entire Output Management;
- Send user-defined messages;

Only one action of the same type can be defined for an event (except in the case of output conditions). If you need several actions of the same type for the event **job ok** or **job not ok**, you can define these by adding A type events.

# End-of-Job Checks for Various Operating Systems

The following table provides an overview of the availability of various end-of-job checks for the supported operating systems and environments:

| End-of-Job Check | OS/390, MSP | VSE/ESA | BS2000/OSD | UNIX | Windows | SAP R/3 |
|---|---|---|---|---|---|---|
| Termination Codes | * | * | | | | |
| Job Variables | | | * | | | |
| User Routine | * | * | * | * | * | |
| String Search | * | * | * | * | * | * |
| User Switch | | | * | | | |
| Exit Code | | | | * | * | |

An asterisk * indicates that the end-of-job check is available for the operating system. These checks are described later in this section.

# End-Of-Job Actions with Execution as a Temporary Dummy Job

Jobs can be executed as a temporary dummy job for different reasons. For further information, see Job Execution as a Dummy Job in the section System Overview.

This section covers the following topics:

- Carrying out the End-Of-Job Actions
- Sysout Actions

## Carrying out the End-Of-Job Actions

The End-Of-Job Actions are executed as follows (with a top-bottom priority):

| | |
|---|---|
| **Conditions** | Conditions are always set or deleted (even if the job is a temporary dummy job). |
| **Dummy on account of Schedule** | No further End-Of-Job Actions are executed |
| **Dummy for other Reasons** | End-Of-Job Actions are executed. |

## Sysout Actions

Actions, which refer to the sysout file, are not executed, if **no** sysout file exists. This case will apply, if the job is executed as a temporary dummy job.

 Copyright © Software AG 2003

# End-of-Job Checking and Actions Facility

This section covers the following topics:

- Invoking End-Of-Job Checking and Actions
- Column Headings
- Line Commands

## Invoking End-Of-Job Checking and Actions

**To invoke the End-of-Job Checking and Actions facility, display the Job Maintenance screen.**

1. Type **O** in the line command field of the selected job.
2. Press Enter.

   The End-of-Job Checking and Actions screen appears:

```
31.01.02              *** Entire Operations 4.1.1 ***              17:04:16
 Owner   SN           End-Of-Job Checking + Actions   MVS/ESA   Job IEFBR14
 Network A-1                                          Run       Date
 ---------------------------------------------------------------------------
 C Action       Step       will be checked for                       means OA
 _              ANYSTEP    Condition Code =  C0004                    --
 _
 _
 _
 _
 _
 _
 _
 ****************************** Bottom of Data ******************************
 _       ST X   All Checks ok
 _       S      Any Check not ok
 ---------------------------------------------------------------------------
 A Activation  C Cond.  D Delete  E Edit User Rtn  J Job Var  M Modify  O Other
 P Descr. R Recov. S Sysout T Output Mgmt  U User Msg X Action Rtn Y Symbol Set

 Command => ____________________________________________________________
Enter-PF1---PF2---PF3---PF4---PF5---PF6---PF7---PF8---PF9---PF10--PF11--PF12---
      Help  Add   End         Save        Up    Down                   Menu
```

## Column Headings

Meaning of the column headings:

| Column | Description | |
|---|---|---|
| C | One-character line command input field. For an explanation of possible line commands, see Line Commands: End-of-Job Checking and Actions. | |
| Action | Summary of defined actions for the event. The character(s) here correspond to the line commands at the bottom of the screen. | |
| Step | Step name in JCL (ANYSTEP means all steps) (**OS/390 only**). | |
| will be checked for | Event to be checked for (condition code, system code, user abend code, System message, etc.) | |
| means | Event status after check (All checks ok / Any check not ok). | |
| O / A | Two columns: The O column is for **events**. The A column is for **actions**. The following values can appear in these columns: | |
| | **(blank)** | Does not apply. |
| | **-** | Event did not occur. / Action not executed. |
| | **+** | Event occurred. / Action was executed. |
| | **M** | Original definition has been modified. (situation undetermined) |

# Line Commands

You can use the line commands to maintain the events and the actions to be triggered. All actions can be defined for an event (job step) or at the job level.

**To define an action at the job level**

- Enter the required line command in the appropriate input field preceding the All checks ok or Any check not ok field.

The following line commands are available:

 Copyright © Software AG 2003

| Cmd | Description |
|---|---|
| A | Activate a job or network if selected event occurs. |
| C | Define or modify the condition to be set or reset when the selected event occurs. |
| D | Delete an event definition. |
| E | Edit the user routine to be executed if the selected event occurs. |
| J | Add or modify job variable (**BS2000/OSD only**). |
| M | Modify an event definition.<br>OS/390/VSE/ESA<br>BS2000/OSD<br>UNIX, Windows |
| O | Accept a job as not ok. |
| P | Prose. Write a text description of an event. |
| R | Define a recovery action to be executed if the selected event occurs (normally job failure). |
| S | Define job sysout handling on job completion, if the selected event occurs. |
| T | Pass files to Entire Output Management. |
| U | Define message to be sent if the selected event occurs. |
| X | Define a Natural user routine to be executed if the selected event occurs. This is called an **End-of-Job Action Routine**. |
| Y | Define symbol modification or setting. |

Note that the **D** (DELETE), **E** (EDIT) and **M** (MODIFY) line commands are event maintenance commands, and therefore available at the event level only. All other line commands are also available at the job level according to All checks ok and Any check not ok.

The following subsections describe how you can use line commands and PF keys to maintain event definitions and define actions to be triggered at job termination.

# Adding Event Definition for OS/390 or VSE/ESA Job

This section covers the following topics:

- Add/Modify Event Definition
- Field Descriptions: Add/Modify Event Definition

## Add/Modify Event Definition

**To add an event to be checked at job termination**

- Press PF2 (Add) on the End-of-Job Checking and Actions screen.

  A window opens in which you can enter the event definition:

```
 18.11.01                *** Entire Operations 4.1.1 ***                13:36:29
 Owner   REQUEST       End-Of-Job Checking + Actions   MVS/ESA   Job J-1
 Network  +-------------------------------------------------------------+
 -------- !                                                             ! ----
 C Action !                   Add Event Definition                     !   OA
 _        !  Event Type ==> _  C  Termination Code            MVS/ESA   !
 _        !                    R  User Routine                         !
 _        !                    S  String       A  Add. Job-ok,-not-ok  !
 _        !                                                             !
 _        !  Stepname ==> ______________________________                !
 _        !  Operator ==> __   Event ==> _____                          !
 _        !                                                             !
 _        !  User Routine ==> ________ in NATURAL Library ==> ________  !
 ******** !                                                             ! ****
 _        !  String ==> ______________________________                  !
 _        !  Select ==> ________ ________ ________ ________ ________    !
 -------- !             ________ ________ ________ ________ ________    ! ----
 A Activa !  Occurrence of event means OK or NOT OK ==> __              ! ther
 P Descr. !                                                             !  Rtn
          ! Enter-PF1---PF2---PF3-----PF5-----------------------PF12--  !
 Command  !       Help  Add   End     Save                      Menu    !
Enter-PF1 +-------------------------------------------------------------+ 2---
      Help  Add   End         Save        Up    Down                   Menu
```

## Field Descriptions: Add/Modify Event Definition

**(OS/390, VSE/ESA)**

Meaning of the input fields:

| Field | Description | |
|---|---|---|
| Event Type | Type of event to be checked. Possible values: | |
| | **A** | Additional definition for job ok or job not ok.<br>See Example of an A-type Event. |

 Copyright © Software AG 2003

| Field | Description | |
|---|---|---|
| | **C** | Return code received during job execution (job step).<br>See Example of a C-type Event. |
| | **R** | Job sysout is to be checked by a user routine.<br>See Example of an R-type Event. |
| | **S** | Occurrence of a specific string in job sysout**.**<br>See Example of an S-type Event.<br>**Notes:**<br>1. All checks of the sysout file and actions, which refer to the sysout file, are not executed, if no sysout file exists. This case will apply, if the job is submitted as a temporary dummy job.<br>2. A string search in a non-existent file is handled like string not found in an existing file. |
| Step Name | (for a **C-type** event) The JCL step to be checked for the return code specified in the Operator and Event Type fields.<br>Special step names:<br>/ANYSTEP Event occurs if the definition is true for any step of the jobs.<br>/MAXCC Event occurs if it is true for the maximum termination code (condition code) of the job. | |
| | **Note:** | In VSE/ESA you can define STEPNAMEs for Entire Operations with the LABEL statement: /.label, where label stands for STEPNAME. The STEPNAME defined in this way is valid for the following EXEC statement. |
| Operator | (for a **C-type** event) Specify a logical operator to compare the received return code with the value entered in the Event Type field. Possible values: | |
| | **= or EQ** | Code is equal to specified value. |
| | **>= or GE** | Code is greater than or equal to specified value. |
| | **> or GT** | Code is greater than specified value. |
| | **<= or LE** | Code is lower than or equal to specified value. |
| | **< or LT** | Code is lower than specified value. |
| | **!= or NE** | Code is different from specified value. |
| Event | (for a **C-type** event) Specify a condition code to be compared with the return code. Possible values: | |
| | **Cxxxx** | Condition code xxxx (**OS/390**)<br>Return code xxxx (**VSE/ESA**) |
| | **Sxxx** | System abend code xxx (**OS/390 only**) |
| | **Uxxxx** | User abend code xxxx (**OS/390 only**) |
| | **JNR** | Job not run, JCL error. |
| | **JFL** | Job failed, JCL error. |

| Field | Description | |
|---|---|---|
| | **JDL** | Job deleted by operator. |
| | **JIR** | Job execution interrupted (for example: system crash) |
| User Routine | (for an **R-type** event) Name of the user routine which is to run on job termination. See the subsection Editing End-of-Job User Routines. | |
| in Natural Library | (for an **R-type** event) The Natural library in which the user routine resides. This library should be different from the Entire Operations system library. | |
| String | (for an **S-type** event) Specify the actual string in the job sysout for which Entire Operations is to check. | |
| Select (OS/390) | You can limit the search for strings by specifying file numbers in this field according to file type (SM, SO, JL). Enter file type followed by number, range of numbers or an asterisk * as wildcard. For example: | |
| | **SM 1** | Search system messages 1. |
| | **SM 1 5** | Search system messages 1 to 5. |
| | **SO*** | Search all sysout files. |
| Select (VSE/ESA) | You can use these file types: LST, PUN, RDR. | |
| Occurrence of event means OK or NOT OK | Specify the event check status, if defined event occurs. Possible values: | |
| | **OK** | Check ok. |
| | **NO** | Check not ok. |
| | **--** | No effect on the job result. |
| | Usually actions are defined at the job level with the events All checks ok or Any check not ok. If you want to define an action of the same type two or more times for one of these events, you need additional event entries for job ok or job not ok. See Example of an A-type Event. | |
| | **Note:** | You can use these additional event definitions to set conditions, but it is not recommended, because they are not evaluated for the display of job dependencies (see Job Dependencies in the section Job Maintenance). |

When you have finished defining the event, you can proceed in one of the following ways:

- If you defined an R-type event, you can enter **E** in the line command field of the event on the End-of-Job Checking and Actions screen and press Enter to define the user routine using the Entire Operations Editor. (See the subsection Editing End-of-Job User Routines.)
- Press PF2 (Add) to save the definition and clear the window to add another event.
  You can define any number of events for any one job.
- Press PF5 (Save) to save the event definition(s).
- Press PF3 (End) to close the window and return to the End-of-Job Checking and Actions screen. The new events are listed on this screen.

 Copyright © Software AG 2003

# Modifying Event Definition for OS/390 or VSE/ESA Job

This section covers the following topics:

- Modifying an Existing Event Definition
- Example of an A-type Event
- Example of a C-type Event
- Example of an R-type Event
- Example of an S-type Event

---

## Modifying an Existing Event Definition

**To modify an existing event definition**

1. Type **M** in the line command field of the selected event on the End-of-Job Checking and Actions screen.
2. Press Enter.
3. The Modify Event Definition window opens with the current values for the event.
   You can modify the values by overtyping them.

   When you are finished defining the event, you can proceed as follows:

4. Press PF5 (Save) to save the modification.
5. Press PF3 (End) to close the window and return to the End-of-Job Checking and Actions screen.

**Note:**
The modify option (**M** line command) is available at the event level (job step) only.

Below are examples of each type of event definition:

## Example of an A-type Event

**(OS/390)**

```
 18.11.01               *** Entire Operations 4.1.1 ***               11:57:08
 Owner   SN            End-Of-Job Checking + Actions   MVS/ESA   Job JOB1
 Network  +-------------------------------------------------------------+
 -------- !                                                             ! ----
 C Action !                   Add Event Definition                     !   OA
 _        !  Event Type ==> a  C  Termination Code            MVS/ESA   !
 _        !  +-------------------------------------------------------+ !
 _        !  !                                                       ! !
 _        !  !    Event Definition: Additional 'Job ok/not ok'       ! !
 _        !  !                                                       ! !
 _        !  !  This screen can be used to define an additional      ! !
 _        !  !  Job-ok or Job-not-ok event, to define multiple       ! !
 _        !  !  End-of-Job actions.                                  ! !
 ******** !  !                                                       ! ! ****
 _  C     !  !  The event is for OK or NOT OK ==> __                 ! !
 _        !  !                                                       ! !
 -------- !  ! Enter-PF1------PF3-------PF5--------------------       ! ! ----
 A Activa !  !       Help     End       Save                          ! ! ther
 P Descr. !  +-------------------------------------------------------+ !  Rtn
          ! Enter-PF1---PF2---PF3-----PF5-----------------------PF12--   !
 Command  !       Help  Add   End     Save                      Menu     !
Enter-PF1 +-------------------------------------------------------------+ 2---
      Help  Add   End         Save        Up    Down                    Menu
```

**Explanation:**

This screen can be used to define an additional **Job ok** or **Job not ok** event, to execute multiple end-of-job actions of the same type.

Usually actions are defined at the job level with the events **All checks ok** or **Any check not ok**. If you want to define an action of the same type two or more times for one of these events, you need additional event entries for **Job ok** or **Job not ok**.

> **Note:**
> You can use these additional event definitions to set conditions, but it is not recommended, because they are not evaluated for the display of job dependencies (see Job Dependencies in the section Job Maintenance).

# Example of a C-type Event

**(OS/390)**

 Copyright © Software AG 2003

```
 18.11.01               *** Entire Operations 4.1.1 ***               14:10:00
 Owner   SN            End-Of-Job Checking + Actions   MVS/ESA   Job JOB4
 Network  +-------------------------------------------------------------+
 -------- !                                                             ! ----
 C Action !                    Add Event Definition                     !   OA
 _        !  Event Type ==> C  C  Termination Code            MVS/ESA    !
 _        !                    R  User Routine                          !
 _        !                    S  String       A  Add. Job-ok,-not-ok   !
 _        !                                                             !
 _        !  Stepname ==> ANYSTEP_______________________                !
 _        !  Operator ==> EQ   Event ==> C0003                          !
 _        !                                                             !
 _        !  User Routine ==> ________ in NATURAL Library ==> ________  !
 ******** !                                                             ! ****
 _        !  String ==> ______________________________                  !
 _        !  Select ==> ________ ________ ________ ________ ________    !
 -------- !             ________ ________ ________ ________ ________    ! ----
 A Activa !  Occurrence of event means OK or NOT OK ==> NO               ! ther
 P Descr. !                                                             !  Rtn
          ! Enter-PF1---PF2---PF3-----PF5-----------------------PF12--  !
 Command  !       Help  Add   End     Save                      Menu    !
Enter-PF1 +-------------------------------------------------------------+ 2---
      Help  Add   End         Save        Up    Down                   Menu
```

**Explanation:**

If return code C0003 is received at any step during job execution, the event result will be **not ok**.

# Example of an R-type Event

**(OS/390)**

```
 18.11.01               *** Entire Operations 4.1.1 ***               14:21:07
 Owner   SN            End-Of-Job Checking + Actions   MVS/ESA   Job JOB4
 Network  +-------------------------------------------------------------+
 -------- !                                                             ! ----
 C Action !                    Add Event Definition                     !   OA
 _        !  Event Type ==> R  C  Termination Code            MVS/ESA    !
 _        !                    R  User Routine                          !
 _        !                    S  String       A  Add. Job-ok,-not-ok   !
 _        !                                                             !
 _        !  Stepname ==> ______________________________                !
 _        !  Operator ==> __   Event ==> _____                          !
 _        !                                                             !
 _        !  User Routine ==> UR1_____ in NATURAL Library ==> USER____  !
 ******** !                                                             ! ****
 _        !  String ==> ______________________________                  !
 _        !  Select ==> ________ ________ ________ ________ ________    !
 -------- !             ________ ________ ________ ________ ________    ! ----
 A Activa !  Occurrence of event means OK or NOT OK ==> NO               ! ther
 P Descr. !                                                             !  Rtn
          ! Enter-PF1---PF2---PF3-----PF5-----------------------PF12--  !
 Command  !       Help  Add   End     Save                      Menu    !
Enter-PF1 +-------------------------------------------------------------+ 2---
      Help  Add   End         Save        Up    Down                   Menu
```

**Explanation:**

User routine UR1 checks the job sysout at job completion. This routine resides in Natural library SYSEORU.

**To edit the user routine**

- Enter **E** in the line command field of the event on the End-of-Job Checking and Actions screen (see the subsection Editing End-of-Job User Routines).

# Example of an S-type Event

**(OS/390)**

```
 18.11.01               *** Entire Operations 4.1.1 ***               14:24:16
 Owner   SN            End-Of-Job Checking + Actions   MVS/ESA   Job JOB4
 Network  +-------------------------------------------------------------+
 -------- !                                                             ! ----
 C Action !                   Add Event Definition                     !   OA
 _        !  Event Type ==> S  C  Termination Code            MVS/ESA   !
 _        !                    R  User Routine                         !
 _        !                    S  String       A  Add. Job-ok,-not-ok  !
 _        !                                                            !
 _        !  Stepname ==> ______________________________               !
 _        !  Operator ==> __   Event ==> _____                         !
 _        !                                                            !
 _        !  User Routine ==> ________ in NATURAL Library ==> ________ !
 ******** !                                                            ! ****
 _        !  String ==> EXCEEDS_______________________                 !
 _        !  Select ==> SM*_____ ________ ________ ________ ________   !
 -------- !             ________ ________ ________ ________ ________   ! ----
 A Activa !  Occurrence of event means OK or NOT OK ==> NO              ! ther
 P Descr. !                                                            !  Rtn
          ! Enter-PF1---PF2---PF3-----PF5----------------------PF12--   !
 Command  !       Help  Add   End     Save                     Menu    !
Enter-PF1 +-------------------------------------------------------------+ 2---
      Help  Add   End         Save        Up    Down                   Menu
```

**Explanation:**

If the string EXCEEDS appears in any system message, the event result is **not ok**.

If you enter NE or != in the Operator field, the event occurs if the string is **not** found.

**Notes**

1. All checks of the sysout file and actions which refer to the sysout file, are not executed, if **no** sysout file is available. This case only applies, if the job is submitted as a temporary dummy job.
2. A string search in a non-existent file is handled like string not found in an existing file.

 Copyright © Software AG 2003

# Adding Event Definition for BS2000/OSD Job

This section covers the following topics:

- Adding an Event Definition
- Field Descriptions

---

## Adding an Event Definition

**To add an event to be checked at job termination**

1. Press PF2 (Add) in the End-of-Job Checking and Actions screen.
2. A window opens in which you can enter the event definition:

```
 18.11.01              *** Entire Operations 4.1.1 ***              12:20:24
 Ow +-------------------------------------------------------------------+
 Ne !                                                                   !
 -- !                 Add Event Definition                             ! ---
 C  !                                                        BS2000     !  OA
 _  !    Event Type ==> _  R  User Routine     J  Job special event     !
 _  !                      S  String           A  Add. Job-ok, Job-not-ok !
 _  !                      U  User Switch                               !
 _  !                      V  Job Variable                              !
 _  !                                                                   !
 _  !  User Routine ==> ________ in NATURAL Library ==> ________        !
 _  !                                                                   !
 _  !  String  ==> ______________________________        missing ==> _  !
 ** !  in File ==> ____________________________________________________ ! ***
 _  !                                   (Optional) Read Password ==>    !
 _  !                                                                   !
 -- !  User Switch  ==> 0_ of BS2000 User ID ==> ________               ! ---
 A  !                                                                   ! her
 P  !  Occurrence of event means OK or NOT OK ==> __                    ! Rtn
    !                                                                   !
 Co ! Enter-PF1---PF2---PF3-----------PF5--------------------------PF12-- !
Ent !       Help  Add   End           Save                          Menu   ! ---
    +-------------------------------------------------------------------+
```

## Field Descriptions

**(BS2000/OSD)**

Meaning of the input fields:

| Field | Description | |
|---|---|---|
| Event Type | Type of event to be checked. Possible values: | |
| | **A** | Additional definition for **job ok** or **job not ok**.<br>See Example of an A-type Event. |
| | **J** | Special event during job execution.<br>See Example of a J-type Event. |
| | **R** | Job sysout is to be checked by a user routine.<br>See Example of an R-type Event. |
| | **S** | Occurrence of a specific string in job sysout**.**<br>See Example of an S-type Event. |
| | **U** | Event depends on a user switch.<br>See Example of a U-type Event. |
| | **V** | Event depends on contents of a **job variable**. If you enter **V**, press Enterimmediately to open a special window for job variable definition. See Example of a V-type Event. |
| User Routine | (for an **R-type** event) Name of the user routine which is to run on job termination. See the subsection Editing End-of-Job User Routines. | |
| in Natural Library | (for an **R-type** event) Natural library in which the user routine resides. This library should be different from the Entire Operations system library. | |
| String | (for an **S-type** event) Specify the actual string in the job sysout for which Entire Operations is to check. | |
| (String) missing | (for an **S-type** event) If you enter **Y** here, the event occurs if the string is not found. | |
| in File | (for an **S-type** event) If you leave this field **blank**, Entire Operations searches for the String in the sysout collection file created by the Entire Operations Monitor. You can enter another file here to be searched instead. If the file name contains the activation escape character, a symbol replacement is performed (from the active symbol table). The updated file name is stored in the active database. | |
| User Switch | (for a **U-type** event) A valid BS2000/OSD user switch must be defined. (Range: 0 through 31). | |
| BS2000/OSD Userid | (for a **U-type** event) The BS2000/OSD user ID of the user switch. | |
| Occurrence of event means OK or NOT OK | Specify event check status if the defined event occurs. Possible values: | |
| | **OK** | Check **ok**. |
| | **NO** | Check not **ok**. |
| | **--** | No effect on the job result. |

When you are finished defining the event, you can proceed in one of the following ways:

- If you defined an R-type event, you can enter **E** in the line command field of the event on the End-of-Job Checking and Actions screen and press Enter to define the user routine using the Entire Operations Editor. (See the subsection Editing End-of-Job User Routines.)
- Press PF2 (Add) to save the definition and clear the window to add another event. You can define any number of events for any one job.
- Press PF5 (Save) to save the event definition(s).
- Press PF3 (End) to close the window and return to the End-of-Job Checking and Actions screen. The new events are listed on this screen.

 Copyright © Software AG 2003

# Modifying Event Definition for BS2000/OSD Job

This section covers the following topics:

- Modifying an Event Definition
- Example of a U-type Event
- Example of a V-type Event
- Adding or Modifying a Job Variable
- Example of a J-type Event

---

## Modifying an Event Definition

**To modify an existing event definition**

1. Type **M** in the line command field of the selected event on the End-of-Job Checking and Actions screen.
2. Press Enter.
3. The Modify Event Definition window opens with the current values for the event. You can modify the values by overtyping them.
4. When you are finished defining the event, you can proceed as follows:
   - Press PF5 (Save) to save the modification.
   - Press PF3 (End) to close the window and return to the End-of-Job Checking and Actions screen.

**Note:**
The modify option (**M** line command) is available at the event level (job step) only.

See the following examples of U-type (user switch), V-type (job variable) and J-type (special event) event definitions and for examples of R-type (user routine) and S-type (string search) event definitions.

## Example of a U-type Event

**(BS2000/OSD)**

```
 18.11.01              *** Entire Operations 4.1.1 ***              09:54:07
 Ow +-------------------------------------------------------------------+
 Ne !                                                                   !
 -- !                Add Event Definition                              ! ---
 C  !                                                       BS2000      !  OA
 _  !    Event Type ==> U  R  User Routine     J  Job special event     !
 _  !                      S  String           A  Add. Job-ok, Job-not-ok !
 _  !                      U  User Switch                               !
 _  !                      V  Job Variable                              !
 _  !                                                                   !
 _  !  User Routine ==> ________ in NATURAL Library ==> ________        !
 _  !                                                                   !
 _  !  String  ==> ______________________________        missing ==> _  !
 ** !  in File ==> ____________________________________________________ ! ***
 _  !                                  (Optional) Read Password ==>     !
 _  !                                                                   !
 -- !  User Switch  ==> 11 of BS2000 User ID ==> DC1_____               ! ---
 A  !                                                                   ! her
 P  !  Occurrence of event means OK or NOT OK ==> OK                    ! Rtn
    !                                                                   !
 Co ! Enter-PF1---PF2---PF3-----------PF5--------------------------PF12-- !
Ent !       Help  Add   End           Save                         Menu   ! ---
    +-------------------------------------------------------------------+
```

**Explanation:**

The event is **ok** if user switch **11** of the BS2000/OSD user ID DC1 is **on** at job termination time.

# Example of a V-type Event

- Field Descriptions: Event Definition

**(BS2000/OSD)**

```
 18.11.01              *** Entire Operations 4.1.1 ***              10:06:01
 Ow +-------------------------------------------------------------------+
 Ne !                                                                   !
 -- !                Add Event Definition                              ! ---
 C  !                                                       BS2000      !  OA
 _  !    Event Type ==> v  R  User Routine     J  Job special event     !
 _  !        +-----------------------------------------------------+ !
 _  !        !                                                     ! !
 _  !        !         Event Definition: Job Variable Checking     ! !
 _  !        !                                            BS2000   ! !
 _  !  User  !  If Contents of Job Variable                         ! !
 _  !        !  $DC1.JV.DEMO_____________________________________  ! !
 _  !  Strin !  at Position 10_ in Length 20_ with Format A         ! !
 ** !  in Fi !  is EQ                                               ! ! ***
 _  !        !  Result is 100_____________________________________ ! !
 _  !        !  ___________________________________________________ ! !
 -- !  User  !                      (Optional) Read Password ==>    ! ! ---
 A  !        !                                                      ! ! her
 P  !  Occur !  The successful Check means OK or NOT OK ==> OK      ! ! Rtn
    !        ! Enter-PF1---------PF3-----------PF5----------------- ! !
 Co ! Enter- !       Help        End           Save                 ! !
Ent !        +-----------------------------------------------------+ ! ---
    +-------------------------------------------------------------------+
```

 Copyright © Software AG 2003

**Explanation:**

The event is **ok** if the job variable $DC1.JV.DEMO contains:

```
Result is 100
```

at position **10** in length **20** in alphanumeric format.

# Field Descriptions: Event Definition

## Job Variable Checking - BS2000/OSD

Meaning of the input fields:

| Field | Description | |
|---|---|---|
| Job Variable | Enter the name of a valid BS2000/OSD job variable. If the job variable is specified without an explicit user ID, the job default BS2000/OSD user ID is used as prefix. Symbol replacement is performed in the name, if the name contains the activation escape character at least once. | |
| at Position | Enter position of job variable substring to be checked. Possible values: **1** through **253**. | |
| in Length | Enter length of job variable substring to be checked. Possible values: **1** through **253**. | |
| with Format | Enter format in which the job variable substring is to be checked against the comparison string. Possible values: | |
| | **A** | alphanumeric |
| | **N** | numeric (zoned) |
| is xx | This is the **comparison operator**. Enter a logical operator for the comparison of the defined BS2000/OSD job variable substring against the comparison string below. Possible values: | |
| | **= or EQ** | Code is equal to specified value. |
| | **>= or GE** | Code is greater than or equal to specified value. |
| | **> or GT** | Code is greater than specified value. |
| | **<= or LE** | Code is lower than or equal to specified value. |
| | **< or LT** | Code is lower than specified value. |
| | **!= or NE** | Code is different from specified value. |
| (Comparison string) | Enter the string or field to be compared with the job variable substring. The strings are compared in the defined Format.<br>The content of this field is compared with the substring of the job variable, or it is inserted into the substring of the job variable.<br>The comparison is made in the defined format. | |
| (Optional) Read Password | If the job variable is read password-protected, specify the password here. | |

# Adding or Modifying a Job Variable

- Field Descriptions
- Special PF Keys

**(BS2000/OSD)**

**To add or modify a job variable in BS2000/OSD**

1. Type **J** in the line command field of the selected event on the End-of-Job Checking and Actions screen. Press Enter.
2. The Job Variable Modification window opens with the current values. You can modify the values by overtyping them:

```
 18.11.01              *** Entire Operations 4.1.1 ***              11:13:46
 Owner   SN           End-Of-Job Checking + Actions   BS2000    Job HUGO
 Network BS2-31                                      Run       Date
 ---------------------------------------------------------------------------
 C Action     Step +-------------------------------------------------------+
 _  C      U       !                                                       !
 _                 !   JV TEST Check is ok                                 !
 _          X      !                Job Variable Modification              !
 J   J             !                                                       !
 _                 !  Set Contents of Job Variable                         !
 _                 !  $XYZ.HUGO_____________________________________________  !
 _                 !  at Position 10_ in Length 10_ with Format A          !
 _                 !  to                                                   !
 ***************** !  test__________________________________________      !
 _   J     U  All  !  ______________________________________________      !
 _            Any  !                      (Optional) Write Password ==> ____  !
 ---------------- !                                                       !
 A Activation  C C !  Enter--PF1-----PF3-------PF5--------------PF9---------  !
 P Descr. R Recove !         Help    End       Save             Delete        !
                   +-------------------------------------------------------+
 Command => ____________________________________________________________
Enter-PF1---PF2---PF3---PF4---PF5---PF6---PF7---PF8---PF9---PF10--PF11--PF12---
      Help  Add   End         Save        Up    Down                    Menu
```

If no job variable has been defined on job level, the fields in this window will be empty; you can set a job variable, by entering the values here. When you are finished setting or modifying the variable, you can proceed as follows:

3. Press PF5 (Save) to save the addition or modification.
4. Press PF3 (End) to close the window and return to the End-of-Job Checking and Actions screen.

**Note:**
Symbol replacement is performed in the name, if the name contains the activation escape character at least once.

## Field Descriptions

 Copyright © Software AG 2003

| Field | Description | |
|---|---|---|
| Job Variable | Enter the name of a valid BS2000/OSD job variable. If the job variable is specified without an explicit user ID, the job default BS2000/OSD user ID is used as prefix. Symbol replacement is performed in the name, if the name contains the activation escape character at least once. | |
| at Position | Enter position of job variable substring to be checked. Possible values: **1** through **253**. | |
| in Length | Enter length of job variable substring to be checked. Possible values: **1** through **253**. | |
| with Format | Enter format in which the job variable substring is to be checked against the comparison string. Possible values: | |
| | **A** | alphanumeric |
| | **N** | numeric (zoned) |
| to | Enter the string or field to be set as the job variable or as a substring of the job variable. Symbol replacement will be performed, if the field contains the activaction escape character at least once. | |
| Write Password | If the job variable is write password-protected, specify the password here. | |

## Special PF Keys

You can perform the following function from the Job Variable Modification window using this PF key:

| Key | Name | Function |
|---|---|---|
| PF9 | Delete | Delete the complete job variable definition. |

# Example of a J-type Event

**(BS2000/OSD)**

This function enables you to define special events which could occur during job execution. When such an event occurs this **always** means **Job not ok**.

```
 18.11.01              *** Entire Operations 4.1.1 ***              11:25:28
 Ow +-------------------------------------------------------------------+
 Ne !                                                                   !
 -- !                 Add Event Definition                             ! ---
 C  !                                                       BS2000      !  OA
 _  !    Event Type ==> J  R  User Routine     J  Job special event     !
 _  !        +-----------------------------------------------+ b-not-ok !
 _  !        !                                               !          !
 _  !        !         Event Definition: Special Event       !          !
 _  !        !                                     BS2000    !          !
 _  !  User  !                                               !          !
 _  !        !  Event ==> ___                                !          !
 _  !  Strin !                                               ! ==> _    !
 ** !  in Fi !                                               ! ________ ! ***
 _  !        !  The occurrence of this event always has the  ! ==>      !
 _  !        !  meaning 'Job not ok'.                        !          !
 -- !  User  !                                               !          ! ---
 A  !        !  Enter-PF1-------PF3--------PF5---------------  !          ! her
 P  !  Occur !        Help      End        Save               !          ! Rtn
    !        +-----------------------------------------------+          !
 Co ! Enter-PF1---PF2---PF3-----------PF5--------------------------PF12-- !
Ent !       Help  Add   End           Save                        Menu   ! ---
    +-------------------------------------------------------------------+
```

**Explanation:**

JIR = Job execution interrupted.

This event occurs if an operating system abend or hardware failure occurs during job execution. This is always used when a job did not run on LOGOFF (job ended normally) or ABEND (job interrupted with error). The defined actions are performed after the start of the Monitor.

 Copyright © Software AG 2003

# Adding Event Definition for UNIX or Windows Job

This section covers the following topics:

- Adding an Event Definition
- Field Descriptions
- Exit Code Check Error Handling

---

## Adding an Event Definition

**To add an event to be checked at job termination**

1. Press PF2 (Add) in the End-of-Job Checking and Actions screen.
2. A window opens in which you can enter the event definition:

```
 20.11.01              *** Entire Operations 4.1.1 ***              14:26:40
 Ow +-------------------------------------------------------------------+
 Ne !                                                                   !
 -- !                 Add Event Definition                             ! ---
 C  !                                                        HP-UX      !  OA
 _  !    Event Type ==> _  X  Exit Code        J  Job special event     !
 _  !                      R  User Routine     A  Add. Job-ok, Job-not-ok !
 _  !                      S  String                                    !
 _  !                                                                   !
 _  !                                                                   !
 _  !  Exit Code is ==> __ than ==> 0___                                !
 _  !                                                                   !
 _  !  User Routine ==> ________ in NATURAL Library ==> ________        !
 ** !                                                                   ! ***
 _  !  String  ==> ________________________________        missing ==> _ !
 _  !  in File ==> ___________________________________________________ !
 -- !                                                                   ! ---
 A  !                                                                   ! her
 P  !  Occurrence of event means OK or NOT OK ==> __                    ! Rtn
    !                                                                   !
 Co ! Enter-PF1---PF2---PF3-----------PF5--------------------------PF12-- !
Ent !       Help  Add   End           Save                         Menu  ! ---
    +-------------------------------------------------------------------+
```

## Field Descriptions

Meaning of the input fields:

| Field | Description | |
|---|---|---|
| Event Type | Type of event to be checked. Possible values: | |
| | **A** | Additional definition for job ok or job not ok.<br>See Example of an A-type Event. |
| | **J** | Special event during job execution.<br>See Example of a J-type Event. |
| | **R** | Job sysout is to be checked by a user routine.<br>See Example of an R-type Event. |
| | **S** | Occurrence of a specific string in job sysout.<br>See Example of an S-type Event.<br>**Note:**<br>A string search in a non-existent file is handled like string not found in an existing file. |
| | **X** | Exit Code Check. This function allows you to check the exit code of a UNIX or Windows job.<br>The result of the event comes from the exit code of a script under UNIX or Windows or from the exit code of a program executable under Windows.<br>**Note:** A standard check for the exit code can be defined in the Entire Operations defaults.<br>**Windows:**<br>Checking this event only works with Windows NT Version 4.0 or higher as the System variable *%errorlevel%* is used.<br><br>See also Exit Code Check Error Handling. |
| User Routine | (for an **R-type** event) Name of the user routine which is to run on job termination. See the subsection Editing End-of-Job User Routines. | |
| in Natural Library | (for an **R-type** event) Natural library in which the user routine resides. This library should be different from the Entire Operations system library. | |
| String | (for an **S-type** event) Specify the actual string in the job sysout for which Entire Operations is to check. | |
| (String) missing | (for an **S-type** event) If you enter **Y** here, the event occurs if the string is not found. | |
| in File | (for an **S-type** event) If you leave this field **blank**, Entire Operations searches for the **String** in the sysout collection file created by the Entire Operations Monitor. You can enter another file here to be searched instead. If the file name contains the activation escape character, a symbol replacement is performed (from the active symbol table). The updated file name is stored in the active database. | |
| Occurrence of event means OK or NOT OK | Specify event check status if the defined event occurs. Possible values: | |
| | **OK** | Check **ok**. |
| | **NO** | Check **not ok**. |
| | **--** | No effect on the job result. |

When you are finished defining the event, you can proceed in one of the following ways:

- If you defined an R-type event, you can enter **E** in the line command field of the event on the End-of-Job Checking and Actions screen and press Enter to define the user routine using the Entire Operations Editor. (See the subsection Editing End-of-Job User Routines.)
- Press PF2 (Add) to save the definition and clear the window to add another event. You can define any

 Copyright © Software AG 2003

number of events for any one job.

- Press PF5 (Save) to save the event definition(s).
- Press PF3 (End) to close the window and return to the End-of-Job Checking and Actions screen. The new events are listed on this screen.

# Exit Code Check Error Handling

If a sysout file read error occurs while the Monitor is trying to read the exit code from the job sysout, this error will be treated as a temporary error.
The Monitor will attempt to read the exit code up to 10 times. The time between the attempts is equal to the Monitor wait time.
If there is still no success after 10 attempts, the job will be set to the status ’permanent error’.

 Modifying Event Definition for UNIX or Windows Job

# Modifying Event Definition for UNIX or Windows Job

**To modify an existing event definition**

1. Type **M** in the line command field of the selected event on the End-of-Job Checking and Actions screen. Press Enter.
2. The Modify Event Definition window opens with the current values for the event. You can modify the values by overtyping them.

   When you are finished defining the event, you can proceed as follows:

3. Press PF5 (Save) to save the modification.
4. Press PF3 (End) to close the window and return to the End-of-Job Checking and Actions screen.

   **Note:**
   The modify option (**M** line command) is available at the event level only.

 Copyright © Software AG 2003

# Deleting an Event Definition

**To delete an event definition**

1. Type **D** in the line command field of the selected event in the End-of-Job Checking and Actions screen. Press Enter.

   A window opens in which Entire Operations asks you to confirm the deletion by entering the event name.

2. Press Enter to perform the deletion and close the window.

   **Note:**
   The **D** line command is available only at the event level.
   Deletion of an event also deletes all associated definitions made via the End-of-Job Checking and Actions screen (action for the event, etc.).

# EOJ Checking Defaults for Various Operating Systems

This section covers the following topics:

- OS/390 Defaults for Event Checking
- VSE/ESA Defaults for Event Checking
- BS2000/OSD Defaults for Event Checking
- UNIX and Windows Defaults for Event Checking

---

## OS/390 Defaults for Event Checking

- Precedence of Event Checks

If no events are defined for a job, Entire Operations provides a default check of the return code type (for a **C-type** event):

- If a system code unequal to 0 (zero) has occurred at any job step, the job is evaluated as **not ok** if this event is not explicitly defined.

  This also applies, if an event has occurred which has been defined using ANYSTEP.
  The occurrence of such an event has the priority over definitions, which apply for any steps.

- It can be defined throughout the system, how the occurrence of the message **IEF201I job terminated** because of condition codes is treated (see Entire Operations Administration Documentation).

  If it was defined there that this message shall not default to **not ok** as a consequence, then this is written to the log, the job set to the status **Job interrupted**, and the job is treated as **not ok**.
  If this was not defined, then the occurrence of IEF201I in sysout has no consequences.

- If the message **IEF287I data set not cataloged** is received, it is written to the log and the job is treated as **not ok**.
- If a condition code or user code, which is not explicitly defined, is received at any job step, it is compared with the **highest value accepted as ok**. The job is **not ok** if the code is higher than this default. The job is also **not ok**, if no explicit check has returned an **ok**. For more information, see the subsection Entire Operations Defaults in the section System Administrator Services of the Entire Operations Administration Documentation.
- If a string defined in the Global Message Code Table is found anywhere in the sysout, its severity equivalent is compared with the **highest condition code value accepted as ok**. The job is **not ok** if the severity equivalent is higher than this default.
- Events like JCL error, Job not run, Job interrupted always produce the status **not ok**.
- In all other cases, the job is accepted as **ok**.

### Precedence of Event Checks

- If a ’/MAXCC’ oder ’/ANYSTEP’ check has been defined, and this event occurs, no check is done on the **highest value accepted as still OK**.
- ’/MAXCC’ precedes ’/ANYSTEP’.

 Copyright © Software AG 2003

# VSE/ESA Defaults for Event Checking

- Date Formats in VSE/ESA Sysout

The same rules as for OS/390 defaults apply to VSE/ESA.

**Note:**
**No system codes are available** in the VSE/ESA operating system.

The following messages lead to a **not ok** status of the VSE/ESA job:

- PROGRAM ABEND
- ENDED ABNORMALLY
- OPERATOR CANCEL

## Date Formats in VSE/ESA Sysout

In VSE/ESA sysout the following date formats are recognized and handled:

| | |
|---|---|
| **American Format** | MM/DD/YY, MM/DD/YYYY |
| **European Format** | DD/MM/YY, DD/MM/YYYY |

If a date contains a 2-digit year specification in sysout, then Entire Operations adds the century for further processing. In this case, a sliding window of + / - 50 years is applied.

# BS2000/OSD Defaults for Event Checking

Entire Operations either uses a defined Monitor job variable for a job or creates its own job variable, if job variables are available.

- If the Monitor job variable displays an **abnormal end**, the job is **not ok**.
- By default, if defined message keys appear, the job is regarded as faulty and is set to **not ok**:

  These message codes (see the Entire Operations Administration Documentation) are default settings which are in effect after the installation of Entire Operations. However, they can be deliberately adapted. It is possible to completely delete this table.

  Please note each time this table is modified that possibly faulty jobs may not be set to **not ok** any longer.

  This list can be changed.

- If messages like **program dump**, etc. appear in the sysout, the job is **not ok**.
- The Global Message Code Table is checked as described for OS/390, above.
- In all other cases, the job is accepted as **ok**.

# UNIX and Windows Defaults for Event Checking

Entire Operations inserts start and end messages (EOR0301, EOR0302) in the sysout.

- If the end message is missing, the job is treated like an interrupted job.
- The Global Message Code Table is checked, as described for OS/390.
- If no special event checking was defined for a job (Unix and Windows), then the event is compared to a system-wide default value for Unix or Windows. Depending upon this check, the job result can be set to **not ok**.

- In all other cases, the job is accepted as **ok**.

 Copyright © Software AG 2003

# Creating Online Documentation for Events

You can write or modify a text description of any event or of any job status according to All checks ok and Any check not ok status.

**To do that**

1. Type **P** in the line command input field of the appropriate event on the End-of-Job Checking and Actions screen. Press Enter.

   The Entire Operations Editor screen appears.

2. You can write a text using Editor commands. A full description of the Entire Operations Editor is contained in the **Software AG Editor Documentation**.

# Adding Output Condition Definitions

You can define output conditions for an event or a job.

This section covers the following topics:

- Adding Output Conditions for an Event
- Adding Output Conditions for a Job Event

---

## Adding Output Conditions for an Event

**To add an output condition definition for a defined event**

1. Type **C** in the line command field of the selected event on the End-of-Job Checking and Actions screen. Press Enter.

   The Output Conditions window opens with a list of existing output conditions).

2. Proceed as described after Column Headings: Output Conditions in the subsection Adding Output Conditions for a Job Event.

## Adding Output Conditions for a Job Event

- Column Headings
- Field Descriptions

You can define a condition at the job level according to end-of-job status (job ok = All checks ok, job not ok = Any check not ok).

**To do that**

1. Type the **C** line command in the **All checks ok** or **Any check not ok** line command field on the End-of-Job Checking and Actions screen.
2. Press Enter.

   The Output Conditions opens with a list of existing output conditions:

 Copyright © Software AG 2003

```
 18.11.01                *** Entire Operations 4.1.1 ***                15:17:09
 Owner   EXAMPLE       End-Of-Job Checking + Actions   MVS/ESA   Job JOB-02
 Network E60-FLOW                                       Run       Date
 ---------------------------------------------------------------------------
 C Action      +-------------------------------------------------------+   OA
 _     P       !                                                       !
 _             !   Job ended ok                                        !
 _             !                   Output Conditions                   !
 _             !   Cmd State  Condition Name        Reference     Run  !
 _             !    _  Set    E60-JOB2-O1           RUN                !
 _             !    _  Set    E60-JOB2-O2           RUN                !
 _             !    _  Reset  E60-J015-O            RUN                !
 _             !    _  Reset  E60-J019-O            RUN                !
 ************* !    _  Reset  E60-JOB1-O            RUN                ! ****
 c  C  P       !    _                                                  !
 _     PR      !    _                                                  !
 ------------- !    _                                                  ! ----
 A Activation  !    _                                                  ! ther
 P Descr. R Re !    _                                                  !  Rtn
               !    D Delete  M Modify  W Where used                   !
 Command => __ ! Enter-PF1---PF2---PF3---PF5-------PF7---PF8----PF12-  !
Enter-PF1---PF !       Help  Add   End   Save      Up    Down   Menu   ! 2---
      Help  Ad +-------------------------------------------------------+ u
```

## Column Headings

Meaning of the column headings:

| Column | Description | |
|---|---|---|
| Cmd | One-character line command input field. Possible values: | |
| | **D** | Deletes condition as output condition for the job. |
| | **M** | Modifies the output condition definition. |
| | **W** | Displays a table of jobs for which this condition is defined as input or output condition. For more information, see the subsection Displaying Output Condition Use. |
| State | A condition can be set (to TRUE) or reset (to FALSE) on the occurrence of an event. | |
| Condition Name | User-defined name for condition. Use this name if you wish to define this output condition as an input condition for another job. | |
| Reference | Notation used to distinguish between the same condition in different job runs. Use this reference date if you wish to define this output condition as input condition for another job. If left **blank**, the current run is assumed. | |
| Run | Run number of job to which this condition applies when modifying condition for an active job. | |

**To add an output condition definition**

- Press PF2 (Add).

  The Output Condition Addition window opens:

```
 18.11.01               *** Entire Operations 4.1.1 ***               15:26:33
 Owner   EXAMPLE       End-Of-Job Checking + Actions   MVS/ESA   Job JOB-02
 Network E60-FLOW                                     Run       Date
 ---------------------------------------------------------------------------
 C Action      +-------------------------------------------------------+   OA
 c     P       !                                                       !
 _             !   Step STEP1 returns Condition Code = C0000           !
 _        +----------------------------------------------------+       !
 _        !                                                     ! n   !
 _        !    Step STEP1 returns Condition Code = C0000        !      !
 _        !          Output Condition Addition                  !      !
 _        !                                                     !      !
 _        !          Condition ==> ____________________         !      !
 ******** !          Reference ==> ________                     !      ! ****
 _  C  P  !                Run ==> _____                        !      !
 _     PR !          Set/Reset ==> _____                        !      !
 -------- !                                                     !      ! ----
 A Activa !   PF3 End                                           !      ! ther
 P Descr. +-----------------------------------------------------+      !  Rtn
               !    D Delete  M Modify  W Where used                   !
 Command => __ ! Enter-PF1---PF2---PF3---PF5-------PF7---PF8----PF12-  !
Enter-PF1---PF !       Help  Add   End   Save      Up    Down   Menu   ! 2---
      Help  Ad +-----------------------------------------------------+ u
```

## Field Descriptions

Meaning of the input fields:

| Field | Description | |
|---|---|---|
| Condition | Condition name. | |
| | **Note:** | A condition that can be used **across networks** is called a **global condition**. If you want to add or modify a global condition:<br>• The prefix is +.<br>• A global condition is assigned to the SYSDBA owner and network. |
| Reference | An output condition can be set with different references (usually the current network run number). Possible values: | |
| | **RUN** | Current run number of the job network is assigned. |
| | **ABS** | Absolute condition. Exists only **once**, because it is independent of run numbers. |
| | The reference is evaluated and set when the active condition is created by the Monitor according to the end-of-job definition. | |
| Run | Run number of job to which this condition is to apply when modifying condition for an active job. | |
| Set/Reset | If the associate event occurs, SET specifies setting the condition to TRUE; RESET specifies setting the condition to FALSE. Default is set. | |

- Press PF3 (End) to save the definition and return to the list of conditions in the Output Conditions window.

You can define up to 50 output conditions for any one event at the job step level, or at the job level according to **All checks ok** and **Any checks not ok**.

 Copyright © Software AG 2003

# Modifying Output Condition Definitions

**To modify an existing output condition**

1. Type **M** in the line command input field of the selected condition in the Output Conditions window.

   The Output Condition Modification window opens with the current values of the conditions.

   The Output Condition Modification and Addition windows have the identical layout. The input fields are explained above under Field Descriptions: Output Condition Addition/Modification.

2. Modify the values.
3. Press PF3 (End) to save the new definition and return to the Output Conditions window.

   **Note:**
   After you add or modify an output condition definition, a loop check is performed on the affected network. The same conditions apply as described in the subsection Checking for a Loop in a Job Network in the section Network Maintenance with one exception: if a loop is detected in the job flow, no corresponding message appears.

# Displaying Output Condition Use

**To display a list of jobs, for which the output condition is defined as an input or output condition**

1. Enter **W** in the line command input field of the selected condition in the Output Conditionswindow. Press Enter.

   The following window opens:

```
 18.11.01               *** Entire Operations 4.1.1 ***               09:11:01
 Owner   EXAMPLE       End-Of-Job Checking + Actions   MVS/ESA   Job JOB-02
 Network E60-FLOW                                      Run      Date
 ---------------------------------------------------------------------------
 C Action    S +-------------------------------------------------------+s  OA
 _     P     S !                                                       !
 _             !   Job ended ok                                        !
  +-----------------------------------------------------------------------+
  !                                                                       !
  !                      Condition: E60-JOB2-O1                           !
  !  Output Condition of                  Input Condition for             !
  !  -----------------------------------+----------------------------- !
  !  Owner       Network     Job        !  Owner       Network     Job   !
  !  EXAMPLE     E60-FLOW    JOB-02     !  EXAMPLE     E60-FLOW    JOB-03 !
  !  EXAMPLE     E60-FLOW    JOB-03     !                                !
  !                                     !                                !
  !                                     !                                !
  !                                     !                                !
  !                                                                      !
  ! Enter-PF1---PF2---PF3---PF4---PF5---PF6---PF7---PF8---PF9---PF10-----  !
  !                   End                     Up    Down                 !
E +-----------------------------------------------------------------------+
      Help  Ad +-------------------------------------------------------+nu
```

2. Press PF3 (End) to return to the Output Conditions window.

 Copyright © Software AG 2003

# Editing End-of-Job Checking User Routines

This section covers the following topics:

- Creating or Editing User Routines
- Example

---

## Creating or Editing User Routines

For end-of-job checking user routines, the common exit parameter list NOPXPL-A must be used. The parameter P-CALL-PLACE will contain ‡EJCŸ.

**Note on parameter list usage:**
The field P-JOB-NUMBER (N5) should no longer be used. It is too short for some operating systems. Use the field P-JOB-ID-10 (A10) instead.

**To create or edit the user routine for end-of-job checking**

1. Type **E** in the line command field of the associated event in the End-of-Job Checking and Actions screen. Press Enter.

   The Entire Operations Editor screen appears. If a user routine has already been defined, it appears on the screen.

   **Note:**
   The edit option - **E** line command - is available only at the event level, and only if the event is an **R**-type.

2. You can modify the existing user routine or create a new one using Editor commands and PF keys.

   A user check routine must be a Natural subprogram. The subprogram returns a code zero to signal **job ok** status. Any other code signals **job not ok**.

## Example

An end-of-job checking user routine is shown in the example below. This routine summarizes the contents of a numeric field in the sysout and compares it with a given value. If both are equal, the event is treated as **ok**, otherwise as **not ok**.

For a full description of the Editor, see the Software AG Editor Documentation.

```
DEFINE DATA PARAMETER USING NOPXPL-A
LOCAL
1 READ-SPOOL VIEW OF READ-SPOOL      /* AN ENTIRE SYSTEM SERVER VIEW
  2 RECORD
  2 REDEFINE RECORD
    3 RECORD-HEADER    (A05)
*
1 #NF              (I02) CONST <10>   /* MAX. NUMBER FOR SEPARATION
1 #SUM             (N08) INIT  <0>
1 #SUM-EXPECTED    (N08) CONST <2000>
1 #FIELD           (A10/1:#NF)
1 #LOG-STATUS      (N04)
1 #LOG-MESSAGE     (A60)
END-DEFINE
```

```
* ------------------------------------------------
* This EOJ User Routine will read the Job sysout (dataset 2)
* and will summarize a defined field.
* If the sum is equal to a given value, this routine returns
* an 'OK' (P-RC = 0), otherwise 'NOT OK'.
*
* A log record will be written to document the result.
*
RESET #SUM
RS. FIND READ-SPOOL
    WITH NODE = P-EXECUTION-NODE AND JOB-NUMBER = P-JOB-NUMBER
    AND TYPE = 'SO' AND DATA-SET = 2 AND RECORD-NUMBER >= 1
  ACCEPT IF RS.RECORD-HEADER = 'REC01'     /* interesting only
  SEPARATE RS.RECORD LEFT JUSTIFIED INTO #FIELD(*)
  ADD VAL(#FIELD(3)) TO #SUM
END-FIND
*
IF #SUM = #SUM-EXPECTED
  RESET P-RC
  MOVE 'Sum check is ok' TO #LOG-MESSAGE
ELSE
  MOVE 1 TO P-RC
  COMPRESS 'Sum:' #SUM 'Expected:' #SUM-EXPECTED INTO #LOG-MESSAGE
END-IF
MOVE 9999 TO #LOG-STATUS
CALLNAT 'NOPULW3N'          /* WRITE LOG RECORD
  #LOG-STATUS #LOG-MESSAGE P-OWNER P-NETWORK P-JOB P-RUN
  P-JOB-NUMBER
END
```

 Copyright © Software AG 2003

# Defining Activation of Jobs or Job Networks

The occurrence of a defined event during job execution can trigger the activation of a specified single job or a whole job network. You can define activation of a job or network for specific events or at the job level for **All checks ok/Any check not ok**.

**To specify job or job network activation as end-of-job checking and actions**

1. Type **A** in the line command input field of the selected event on the End-of-Job Checking and Actions screen. Press Enter.

   The following window opens when defining job or network activation at the job level for **All checks ok**:

```
18.11.01               *** Entire Operations 4.1.1 ***               12:20:53
Owner   EXAMPLE       End-Of-Job Checking + Actions   MVS/ESA   Job JOB-02
Network E60-FLOW                                      Run       Date
-----------------------------------------------------------------------------
C Action      +-------------------------------------------------------+ ans  OA
_     P       !                                                       !
_             !  Job ended ok                                         ! t ok
_             !               Network / Job Activation                !
_             !                                                       !
_             !  Owner    ===>  __________                           !
_             !  Network  ===>  __________                           !
_             !  Job      ===>  __________ (empty: whole network)     !
_             !                                                       !
************* !  ---PF1---PF3---------PF5--------PF9--------PF12--    ! *******
a  C  P       !     Help  End         Save       Delete     Menu      !
_     PR      +-------------------------------------------------------+
-----------------------------------------------------------------------------
A Activation  C Cond.  D Delete  E Edit User Rtn  J Job Var  M Modify  O Other
P Descr. R Recovery S Sysout T Output Mgmt  U User Messages  X Action User Rtn

Command => ____________________________________________________________
Enter-PF1---PF2---PF3---PF4---PF5---PF6---PF7---PF8---PF9---PF10--PF11--PF12---
      Help  Add   End         Save        Up    Down                    Menu
```

2. Specify the owner, network name and, if a single job is to be activated, the job name in the appropriate fields in the window.
3. Press PF5 (Save) to save the definition.

   You can select Owner, Network and Job names from selection windows invoked by entering search criteria with an asterisk * as wildcard in the input fields and pressing Enter.

   For example, enter ABC* in the Network field and press Enter to list all network names beginning with ABC and belonging to the specified owner. Enter an asterisk * in the Job field and press Enter, for example, to list all jobs in the specified network.

   If you leave the Job field **blank**, the whole specified network is activated.

   **Note:**
   Activation is only possible if the network belongs to the defining user or if the defining user is authorized to activate the network of another user. The user defining the network to be activated must at least have authorization to activate this network (see the subsection Authorizing Other Users to Access a Network in the section Network Maintenance).

# Defining Recovery Action

This section covers the following topics:

- Introduction
- Recovery Action Definition Screen
- System Symbols for Recovery Actions

## Introduction

You can define a recovery process to be started as the result of a defined event during job execution. You can also define recovery action at the job level according to **Any check not ok**. Usually, recovery is used in case of job failure.

The conventional way to trigger a recovery network would be to define an event which activates the recovery network. Recovery is then started only if the event occurs or if any check is **not ok**.

## Recovery Action Definition Screen

- Field Descriptions: Recovery Definition
- Special PF Keys: Recovery Definition

However, Entire Operations also provides a line command on the End-of-Job Checking and Actions screen to define recovery action.

**To do so:**

1. Type **R** in the line command input field of the selected event on the End-of-Job Checking and Actions screen. Press Enter.
2. The Recovery Definition window opens, in which you can specify the recovery network to be started. (The recovery network must be defined in the Network Maintenance facility.):

```
 18.11.01               *** Entire Operations 4.1.1 ***               15:50:33
 Owner   EXAMPLE       End-Of-Job Checking + Actions   MVS/ESA   Job JOB-02
 Network E60-FLOW                                     Run       Date
 ---------------------------------------------------------------------------
 C Action     Step       will be checked for                        means  OA
 _     P      STEP1      Condition Code =  C0000                    ok
 r                       Occurrence of String  Library full        n.ok
  +-----------------------------------------------------+
  !                                                     !
  !  Occurrence of String Library full                  !
  !                 Recovery Definition                 !
  !  Owner      ==> (SAME)____                          !
  !  Network    ==> (SAME)____                          !
  !  Job        ==> __________ (blank: whole network)   ! ********************
  !                                                     !
  !  Same Run   ==> _    (Y/N)                          !
  !  Reschedule ==> _    (Y/N)                          ! ---------------------
  !  Repeat     ==> __                                  ! ar  M Modify  O Other
  !  Wait Time  ==> ___  Minutes                         ! es  X Action User Rtn
  !                                                     !
  !  ---PF1---PF3-------PF5---------PF9--------PF12---  ! ______________
E !     Help  End       Save        Delete     Menu     ! --PF10--PF11--PF12---
  +-----------------------------------------------------+               Menu
```

 Copyright © Software AG 2003

For example, a recovery job can be a compression job started after the message **Library full** is received. The string **Library full** should be defined as an S-type event. Entire Operations starts the recovery job automatically when the event occurs.

## Field Descriptions: Recovery Definition

Meaning of the input fields:

| Field | Description | |
|---|---|---|
| Owner | Name of the owner of the recovery network. Default: (SAME). If you do not change the default, (SAME) means the owner of the network to be recovered. The default value is replaced at execution time. | |
| Network | Name of network containing the recovery job(s). Default: (SAME). If you do not change the default, (SAME) means the same network as the one containing the job(s) to be recovered. The default value is replaced at execution time.<br><br>**Note:** When you copy a recovery job to another network, the default values (SAME) for owner and network remain unchanged, so that the recovery job can be used unchanged in the network to which it was copied. | |
| Job | Name of the last job in the recovery network. This job must terminate successfully to start rescheduling. | |
| Same Run | Single recovery jobs can be defined in the same network and can be executed under the same run number as the network to be recovered. All active objects of the network are then accessible for the recovery job with this run number. Possible values: | |
| | **Y** | Use same run number (default for single jobs). |
| | **N** | Use a separate run number for the recovery (default for whole network). |
| Reschedule | Specifies whether job is to be rescheduled for submission after recovery. Possible values: | |
| | **Y** | Resubmit the job. |
| | **N** | Do not resubmit the job. (default) |
| Repeat | Maximum number of times recovery job is to be retried. Default is 1. | |
| Wait Time | The time to wait in minutes until the recovery is started. | |

You can display a selection list of available Networks, Jobs and Owners by entering an asterisk * in the appropriate field and pressing Enter.

## Special PF Keys: Recovery Definition

You can perform the following function from the Recovery Definition window using this PF key:

| Key | Name | Function |
|---|---|---|
| PF9 | Delete | Delete current recovery definition. |

# System Symbols for Recovery Actions

When defining a recovery action, the following Entire Operations system symbols can be prefixed with the escape symbol for symbol prompting and used, for example, in a comment line in the JCL of the recovery job:

| Field Name | Description |
|---|---|
| P-C-OWNER | Owner of the job making the call. |
| P-C-NETWORK | Network of the job making the call. |
| P-C-JOB | Name of job making the call. |
| P-C-RUN | Run number of the job making the call. |
| P-C-Suffix | Value of the suffix symbol of the job making the call. |

They are substituted at JCL load with their current values. In the sysout of the recovery job, you can then find the substitution of the parameters:

```
  *** Symbol  : P-C-OWNER
  ***   Value : GFR
  *** Symbol  : P-C-NETWORK
  ***   Value : NET-1
  *** Symbol  : P-C-JOB
  ***   Value : JOB-6
  *** Symbol  : P-C-RUN
  ***   Value : 208
  *** ====================================================
2 //STEP1    EXEC PGM=NOPCONTI
3 //STEPLIB  DD   DISP=SHR,DSN=NOP.DEV.LOAD
  *** CALLER OWNER   GFR
  *** CALLER NETWORK NET-1
  *** CALLER JOB     JOB-6
  *** CALLER RUN     208
  ***
```

In this way you can find out the job making the call, that is, the job to be recovered by the recovery job.

 Copyright © Software AG 2003

# Sysout Actions

You can define the job sysout to be cancelled or printed as the result of a defined event or the end-of-job status (**All checks ok** and **Any check not ok**).

This section covers the following topics:

- Defining Job Sysout Actions
- Field Descriptions: Sysout Actions

---

## Defining Job Sysout Actions

**To define job sysout actions**

1. Type the **S** line command in the appropriate line command field in the End-of-Job Checking and Actions screen.
2. Press Enter.

   The Sysout Actions window opens:

```
 20.11.01              *** Entire Operations 4.1.1 ***              16:30:36
 Owner   SN           End-Of-Job Checking + Actions   MVS/ESA   Job JOB-1
 Network RZF-REC                                     Run       Date
 ---------------------------------------------------------------------------
 C Action      +-----------------------------------------------------+ eans  OA
 s             !                                                     ! .ok
 _             !  Job deleted by Operator                            !
 _             !                   Sysout Actions                    !
 _             !                                                     !
 _             !     Delete Sysout after Job Completion   ===> D     !
 _             !     Print  Sysout                        ===> P     !
 _             !     Log Sysout in ENTIRE OPERATIONS Log  ===> L     !
 _             !     Log Sysout, then Delete it           ===> N     !
 ************* !     Log Sysout, then Print  it           ===> M     ! ********
 _  C          !     Pass Sysout to ENTIRE OUTPUT MGMT    ===> O     !
 _             !                             Please Select ===> _     !
 ------------- !                                                     ! --------
 A Activation  !   Spool Class to be set after Completion ===> _     !  O Other
 P Descr. R Re !                                                     ! User Rtn
               !  PF1 Help   PF3 End                                 !
 Command => __ +-----------------------------------------------------+ _
Enter-PF1---PF2---PF3---PF4---PF5---PF6---PF7---PF8---PF9---PF10--PF11--PF12---
      Help  Add   End         Save        Up    Down                    Menu
```

## Field Descriptions: Sysout Actions

| Field | Description | |
|---|---|---|
| Please Select | Enter one of the following letters in this field to perform the function: | |
| | **D** | Delete sysout on job completion. |
| | **P** | Release sysout for printing. |
| | **L** | Log sysout in Entire Operations log file. |
| | **N** | Log sysout and then cancel it. |
| | **M** | Log sysout and then print it. |
| | **O** | Pass sysout to Entire Output Management (NOM). In NOM, the report name is EOR-SOUT. (This function is available only under BS2000/OSD). |
| Spool Class to be set after Job Completion | You can specify that the spool class of a job is to be modified after completion. If this is specified as default, it applies to **all** jobs. Job-specific definitions override the default. | |
| | **Notes:**<br>1. This field has no effect in BS2000/OSD.<br>2. The class entered here has priority, if a class is set as system default (see the subsection Defaults for OS/390 and OS/390/XA in the section System Administrator Services of the Entire Operations Administration Documentation).<br>3. You should only define sysout class changes under **All checks ok** or **Any check not ok**. | |

End-of-job user routines are available for more complex actions, for example for obtaining selected information from the job sysout.

3. Press PF5 (Save) to save the definition.
4. Press PF3 (End) to close the window and return to the End-of-Job Checking and Actions screen.

Sysout actions are performed at job completion if the associated event occurs.

 Copyright © Software AG 2003

# Passing Sysout or Files to Entire Output Management (NOM)

After job termination, the job sysout and/or one or several files can be passed to Entire Output Management for output processing.

This section covers the following topics:

- Passing Files to NOM to Process Output
- Adding File Definition for NOM
- Spool File
- Output File - Sequential File
- Handing Over Sysout and Files to NOM
- Sysout Copy (UNIX/Windows to Mainframe)

# Passing Files to NOM to Process Output

**General Notes:**

1. If you want to specify more than 10 files for a job, define an additional **job ok** / **job not ok** event first, and define the additional files there.
2. The following are requirements for using this function:
   - Entire Output Management version 1.3.3 or higher must be installed;
   - an NTFILE or LFILE definition for the Entire Output Management System File must be entered in the start parameters for System Automation Tools or Entire Operations. For further information, see the section Installation and Customization in the Entire Operations Installation and Operations Documentation.
3. If NOM (LFILE 206) is defined, and if the NOP monitor receives NAT0082 calling the NOM API, the message "NOM Trigger interface not active" will be written to log before NOP task restart. Subsequent attempts to pass sysout to NOM will be ignored with the message "Passing to NOM impossible".
4. If a sysout or file cannot be passed to the NOM API, the NOM API calls for a job to be retried. Check the Entire Operations Log for more detailed error information.

**To pass files to NOM for output processing:**

- Type the **T** line command in the **All checks ok** or **Any check not ok** line command field on the End-of-Job Checking and Actions screen. Press Enter.

  The following window opens:

```
 20.11.01              *** Entire Operations 4.1.1 ***              13:19:22
 Owner   REQUEST       End-Of-Job Checking + Actions   MVS/ESA   Job J-1
 Network P-106270                                     Run       Date
 ---------------------------------------------------------------------------
 C Acti +-------------------------------------------------------------------+
 _      !                                                                   !
 _      !   Job ended ok                                                    !
 _      !                  Files for ENTIRE OUTPUT MANAGEMENT               !
 _      !   Cmd File                                                        !
 _      !    _  Sysout A 1                                                  !
 _      !    _  HUGO.HUGO.HUGO                                              !
 _      !    _  Sysout SO 3                                                 !
 _      !    _  Procname PROC Stepname STEP DDName DD                       !
 ****** !    _  §EUMEL..TEST                                                !
 T      !    _  Sysout SO 4                                                 !
 _      !    _  Procname XXX Stepname YYY DDName ZZZ                        !
 ------ !    _  TEST.TEST.TEST                                              !
 A Acti !    _                                                              !
 P Desc !    _                                                              !
        !    D Delete  M Modify                                             !
 Comman !   Enter---PF1---PF2---PF3---PF5----------------------------------  !
Enter-P !           Help  Add   End   Save                                  !
      H +-------------------------------------------------------------------+
```

  This window contains a list of all files to be handled by Entire Output Management.

 Copyright © Software AG 2003

# Adding File Definition for NOM

**To add a file definition for Entire Output Management**

1. In the Files for Entire Output Management window press PF2 (Add).

   The following window opens:

```
 20.11.01              *** Entire Operations 4.1.1 ***              13:21:32
  +-------------------------------------------------------+ ESA   Job J-1
  !                                                       !      Date
  !  Job ended ok                                         ! --------------------
  !     File Definition for Output Management (NOM)       ! ------------------+
  !                                                       !                   !
  !     Please select:                                    !                   !
  !           Spool  File Definition   ==> _              ! NT                !
  !           Output File Definition   ==> _              !                   !
  !                                                       !                   !
  !  ---------PF3-------------------------------------    !                   !
  !           End                                         !                   !
  +-------------------------------------------------------+                   !
 ****** !    _  §EUMEL..TEST                                                  !
 T      !    _  Sysout SO 4                                                   !
 _      !    _  Procname XXX Stepname YYY DDName ZZZ                          !
 ------ !    _  TEST.TEST.TEST                                                !
 A Acti !    _                                                                !
 P Desc !    _                                                                !
        !    D Delete  M Modify                                               !
 Comman !   Enter---PF1---PF2---PF3---PF5---------------------------------   !
Enter-P !           Help  Add   End   Save                                   !
      H +-------------------------------------------------------------------+
```

2. Select either Spool File or Output File by entering any character in the appropriate field. Press Enter.

   One of the following windows opens:

   - Spool File
   - Output File

# Spool File

This window opens if you have marked the definition of a spool file in the selection window as described under Adding File Definition for NOM:

```
 20.11.01              *** Entire Operations 4.1.1 ***              13:32:31
  +-----------------------------------------------------+ ESA   Job J-1
  !                    +-------------------------------------------------+
  !  Job ended ok      !                                                 ! ---
  !     File Definitio !  Job ended ok                                   ! -+
  !                    !     File Definition for Output Management (NOM): !  !
  !     Please select: !                    Spool File                   !  !
  !           Spool  F !                                                 !  !
  !           Output F !    Operating System  ==> MVS/ESA                !  !
  !                    !    Spool Type        ==> JES2                   !  !
  !  ---------PF3----- !                                                 !  !
  !           End      !  Please specify either                          !  !
  +------------------- !    Spool File Type   ==> __                    !  !
 ****** !    _  §EUMEL !    Spool File Number ==> _____                   !  !
 T      !    _  Sysout !                                                 !  !
 _      !    _  Procna !  or                                             !  !
 ------ !    _  TEST.T !    Procname          ==> ________              !  !
 A Acti !    _         !    Stepname          ==> ________              !  !
 P Desc !    _         !    DD  Name          ==> ________              !  !
        !    D Delete  !                                                 !  !
 Comman !   Enter---PF !  ---PF1---PF3---------------------------------- !  !
Enter-P !           He !     Help  End                                  !  !
      H +------------- +-----------------------------------------------+ -+
```

You can use this screen to define a file of the job sysout to be handled.

You must specify:

- either the Spool File Type and Number (for VSE/ESA: Spool File Type only)
- or Procname, Stepname and DD Name of the file.

For more information on spool file types, see the subsections Defining Report Identification for JES or Defining Report Identification for POWER in the section Defining a Report of the Entire Output Management Reference Documentation.

 Copyright © Software AG 2003

# Output File - Sequential File

This subsection covers the following topics:

- Output File - Sequential File Window
- Carriage Control Type

## Output File - Sequential File Window

This window opens if you have marked the definition of an output file in the selection window as described under Adding File Definition for NOM:

```
 20.11.01              *** Entire Operations 4.1.1 ***              13:50:46
  +-------------------------------------------------------+ ESA   Job J-1
   +-----------------------------------------------------------------------+
   !                                                                       ! ---
   !  Job ended ok                                                         ! -+
   !            File Definition for Output Management (NOM):               !  !
   !                    Output File (sequential file)                      !  !
   !                                                                       !  !
   !  Operating System  ==> MVS/ESA      Spool Type ==> JES2                !  !
   !                                                                       !  !
   !  File    ==> ____________________________________________________    !  !
   !  CC Type ==> _                                                       !  !
   !  VolSer  ==> ______ Recfm ==> __ Lrecl ==> _____ Blksize ==> _____   !  !
 * !                                                                       !  !
 T !  ----PF1----PF3-------------------------------------------------     !  !
 _ !      Help   End                                                      !  !
 - +-----------------------------------------------------------------------+  !
 A Acti !    _                                                                !
 P Desc !    _                                                                !
        !    D Delete  M Modify                                               !
 Comman !   Enter---PF1---PF2---PF3---PF5---------------------------------   !
Enter-P !           Help  Add   End   Save                                   !
      H +-----------------------------------------------------------------+
```

In this window you can define an output file of the job to be handled.

If the file name contains the activation escape character, a symbol replacement is performed using the job's active symbol table.

For VSE/ESA, the fields VolSer, Recfm, Lrecl, and Blksize are required.

Normally Entire Output Management identifies Report definitions by spool attributes. However, if Entire Operations triggers processing of output files, no such spool attributes exist. Instead, Entire Operations' attributes are passed to Entire Output Management as follows:

| NOP Attribute | NOM Identification | | |
|---|---|---|---|
| | OS/390 | VSE/ESA | BS2000/OSD |
| JOBNAME | Job name | Job name | PNAME |
| USER ID | Destination | Destination | User ID |

# Carriage Control Type

Some operating systems (not OS/390) require that the carriage control type must be specified for an output file. Use one of the following:

| Operating System | CC Type | Function |
|---|---|---|
| BS2000/OSD | - | In BS2000/OSD only, if the file was created with RECFORM=(...,M) or =(...,A), CC type can be taken from the file's catalog entry, otherwise it must be specified in the CC Type field. |
| | **E** | Siemens carriage control characters |
| | **A** | ASA code |
| | **M** | IBM machine code |
| OS/390 | - | In OS/390, the carriage control type is taken from the file's catalog entry. |
| VSE/ESA | **A** | ASA code |
| | **M** | Machine code |

 Copyright © Software AG 2003

# Handing Over Sysout and Files to NOM

This subsection covers the following topics:

- Repetition if File is Missing or Open
- Copying Files Before Handing Over to NOM
- File Copy On Another NPR Node
- Connection with Defined Recovery Action

---

## Repetition if File is Missing or Open

If the file to be handed over did not (yet) exist or was (not) yet closed, the handover will be retried.

The following rules apply:

| Case | Retries | Interval between retries |
|---|---|---|
| Output file cannot be found<br>(does **not** apply for spool files) | 3 | 5 minutes |
| All other cases | 1000 | 30 minutes |

The retry queue will not be deleted in case of a Monitor shutdown and restart.

## Copying Files Before Handing Over to NOM

In the default settings, you can define that the sysout files are copied physically before handover to Entire Output Management.

The advantage of this is that exclusive use (as well as renaming and deleting) of the copy by Entire Output Management can still be looked at in Entire Operations. This, however, means that sysout files need more space.

## File Copy On Another NPR Node

Under the following conditions, the sysout copy is created on another node:

- The symbol SYSOUT-NODE-GLOBAL exists in the symbol table SYSDBA/A and contains a valid node number in the range between 1 and 255.
- In the target environment, the same PubIDs and BS2000/OSD user IDs exist as in the source environment.

## Connection with Defined Recovery Action

Defined recovery actions for an erroneous job are only executed, after all activities for the handover of the sysout to Entire Output Management have been concluded, or after the maximum number of handover tries has been reached.

In case of a recovery action, the sysouts of all job runs are handed over to Entire Output Management. For further information, see Defining Recovery Action.

# Sysout Copy (UNIX/Windows to Mainframe)

This subsection covers the following topics:

- Defining the Handover of Sysout Files
- Field Descriptions

## Defining the Handover of Sysout Files

**To define the handover of sysout files from Unix or Windows to BS2000/OSD**

- Press PF9

  The following window appears:

```
10.10.02              *** Entire Operations 4.1.1 ***              13:55:39
 Owner   SN           End-Of-Job Checking + Actions   WIN/NT    Job APO1
 Network WNT409A                                     Run       Date
 ---------------------------------------------------------------------------
 C Action      +-------------------------------------------------------+ ans OA
 _             !                                                       !
 _             !  Sysout Copy from UNIX / Windows to Mainframe         !
 _             !                                                       !
 _             !  Owner      SN            Sysout Node     31         !
 _             !  Network    WNT409A       Sysout Cat ID              !
 _             !  Run                      Sysout User ID  SN         !
 _             !  Job        APO1                                     !
 _             !  Exec.Node  409                                      !
 ************* !                                                       ! ******
 s       S     !  Note: Please use Job Definition function 'Specials'  !
 _             !        (PF6) to modify the values                     !
 ------------- !                                                       ! ------
 A Activation  !  ---PF1---PF3-------------------------------------   !  Other
 P Descr. R Re !     Help  End                                         ! ol Set
               !                                                       !
 Command => __ +-------------------------------------------------------+
Enter-PF1---PF2---PF3---PF4---PF5---PF6---PF7---PF8---PF9---PF10--PF11--PF12---
      Help  Add   End         Save        Up    Down                    Menu
```

  You can copy a UNIX or Windows sysout file to a BS2000/OSD system so that it can be handed over to the Output Management for instance.

  The sysout node must differ from the execution node, and it must be a BS2000/OSD node.

  The naming conventions for the copy is identical with the one for sysout files, which have been directly created on the mainframe. Even possibly present Exits for Sysout file names are run through).
  Sysout copies are affected by the automatic file cleanup just as the original sysout.

  **Note:**
  1. The application of this function means an additional working effort for the Entire Operations Monitor, which depends on the number of the handovers and on the size of the sysout files.
  2. Use the Job Definition function 'Specials' (PF6) to modify the values.

 Copyright © Software AG 2003

# Field Descriptions

| Field | Meaning |
|---|---|
| Sysout Node | a valid Entire System Server node on BS2000/OSD |
| Sysout Cat ID | BS2000/OSD Cat ID, which is to be used for the copied file (optional) |
| Sysout User ID | BS2000/OSD User ID, under which the copied sysout file is to be generated. |

Copyright © Software AG 2003 

# Message Sending

This section covers the following topic:

- Introduction
- Defining a Message

---

## Introduction

You can define or modify a message to be sent as the result of a defined event, or if the job terminated **ok** or **not ok**. This is especially useful to notify appropriate personnel of job failure.

The Entire Operations Monitor continues to send a message until it has been successfully transmitted.

## Defining a Message

A message can be defined for any one event or at the job level according to All checks ok and Any check not ok.

**To do so:**

- Type **U** in the line command input field of the appropriate event on the End-of-Job Checking and Actions screen. Press Enter.

  The Message and Message Recipients window opens.

  Please refer to the common description of the message receiver table definition.

 Copyright © Software AG 2003

# Defining End-of-Job Action User Routine

You can specify a Natural user routine to be triggered by a specified event.

This section covers the following topics:

- Specifying a User Routine
- Field Descriptions: Execute EOJ Action User Routine
- Special PF Keys: Execute EOJ Action User Routine

## Specifying a User Routine

The End-of-Job checking user routines must use the common exit parameter list NOPXPL-A. The parameter P-CALL-PLACE will contain ‡EJAŸ.

**To specify a user routine to be triggered**

1. Type **X** in the line command input field of the appropriate event on the End-of-Job Checking and Actions screen. Press Enter.

   The following window opens in which you can define a user routine:

```
 20.11.01               *** Entire Operations 4.1.1 ***               17:25:21
 Owner   EXAMPLE       End-Of-Job Checking + Actions   MVS/ESA   Job JOB-02
 Network E60-FLOW                                      Run       Date
 ---------------------------------------------------------------------------
 C Action      +-------------------------------------------------------+ ans  OA
 x     P       !                                                       !
 _             !  Step STEP1 returns Condition Code = C0000            ! ok
 _             !       Execute EOJ Action User Routine                 !
 _             !                                                       !
 _             !  Library       ===>  ________                         !
 _             !  User Routine  ===>  ________                         !
 _             !                                                       !
 _             !                                                       !
 ************* !  Enter-PF1---PF3---PF4---PF5---------PF9-----PF12--   ! *******
 _  C  P       !        Help  End   Edit  Save        Delete  Menu     !
 _     PR      +-------------------------------------------------------+
 ---------------------------------------------------------------------------
 A Activation  C Cond.  D Delete  E Edit User Rtn  J Job Var  M Modify  O Other
 P Descr. R Recovery S Sysout T Output Mgmt  U User Messages  X Action User Rtn

 Command => ____________________________________________________________
Enter-PF1---PF2---PF3---PF4---PF5---PF6---PF7---PF8---PF9---PF10--PF11--PF12---
      Help  Add   End         Save        Up    Down                   Menu
```

## Field Descriptions: Execute EOJ Action User Routine

Meaning of the input fields:

| Field | Description |
|---|---|
| Library | Name of the Natural library containing the user routine. |
| User Routine | Name of the Natural user routine. To display a selection list for user routines available in a given library, first enter the name of a Natural library in the **Library** field, then enter an asterisk * in the **User Routine** field and press Enter. |

# Special PF Keys: Execute EOJ Action User Routine

You can perform the following functions from the Execute EOJ Action User Routine window using these PF keys:

| Key | Name | Function |
|---|---|---|
| PF4 | Edit | Create or edit an end-of-job user routine. |
| PF9 | Delete | Reset execution of a user routine. |

2. Press PF5 (Save) to save the data.
3. Press PF3 (End) to close the window and return to the End-of-Job Checking and Actions screen.

 Copyright © Software AG 2003

# Defining Other Actions

This section covers the following topics:

- Invoking the Other Actions Function
- Special PF Keys: Other Actions

## Invoking the Other Actions Function

To define a job to be deactivated automatically, even if it ended not ok, you must use the Other Actions function.

**To do so:**

1. Enter **O** in the line command field of the appropriate event on the End-of-Job Checking and Actions screen. Press Enter.

   The Other Actions window opens:

```
18.11.01              *** Entire Operations 4.1.1 ***              17:31:34
Owner   EXAMPLE       End-Of-Job Checking + Actions   MVS/ESA   Job JOB-02
Network E60-FLOW                                     Run       Date
-----------------------------------------------------------------------------
C Action      +-------------------------------------------------------+ ans  OA
o     P       !                                                       !
_             !  Step STEP1 returns Condition Code = C0000            ! ok
_             !                    Other Actions                      !
_             !                                                       !
_             !  Accept the job if not ok              ===> _ (Y/N)  !
_             !  (The job can be deactivated, if executed)            !
_             !                                                       !
_             !                                                       !
************* !  ---PF1---PF3------PF5-----------PF9--------PF12---   ! *******
_  C  P       !     Help  End      Save          Delete     Menu     !
_     PR      +-------------------------------------------------------+
-----------------------------------------------------------------------------
A Activation  C Cond.  D Delete  E Edit User Rtn  J Job Var  M Modify  O Other
P Descr. R Recovery S Sysout T Output Mgmt  U User Messages  X Action User Rtn

Command => ____________________________________________________________
Enter-PF1---PF2---PF3---PF4---PF5---PF6---PF7---PF8---PF9---PF10--PF11--PF12---
      Help  Add   End         Save        Up    Down                   Menu
```

2. In this window you can define other actions.

   If you enter **Y** in the field **Accept the job if not ok**, the active job can be automatically deactivated, even if it ended **not ok**. Otherwise, the job remains active until a correction or manual deactivation.

## Special PF Keys: Other Actions

You can perform the following function from the Other Actions window using this PF key:

| Key | Name | Function |
|---|---|---|
| PF9 | Delete | Delete data entered here. |

# Define Symbol Modification or Setting

You can modify master or active symbols as end-of-job action. Analogous to BS2000/OSD job variables, it is possible to set or modify substrings of symbols.

This section covers the following topics:

- Modifying a Symbol Modification Definition
- Symbol Modification Definition Screen
- Field Descriptions
- Special PF Keys

## Modifying a Symbol Modification Definition

**To modify an existing event definition:**

1. Type **Y** in the line command field of the selected event on the End-of-Job Checking and Actions screen.
2. Press Enter.
3. The Modify Symbol Definition window opens with the current values. You can modify the values by overtyping them.
4. When you have finished defining the event, you can proceed as follows:
   - Press PF5 (Save) to save the modification.
   - Press PF3 (End) to close the window and return to the End-of-Job Checking and Actions screen.

## Symbol Modification Definition Screen

```
31.01.02              *** Entire Operations 4.1.1 ***              17:04:16
 Owner   SN           End-Of-Job Checking + Actions   MVS/ESA   Job IEFBR14
 Network A-1                                          Run       Date
 ---------------------------------------------------------------------------
 C Action       St +-------------------------------------------------------+
 _              AN !                                                       !
 _                 !   Job ended ok                                        !
 _                 !                Symbol Modification                    !
 _                 !                                                       !
 _                 !  Set Contents of Symbol  ____________________         !
 _                 !         in Symbol Table  SN-01                        !
 _                 !                   Owner  SN                           !
 _                 !                     Run                               !
 ****************  !             at Position  ___ in Length ___ Format A     !
 y       ST X   Al !  to Value                                             !
 _       S      An !  ________________________________________             !
 ---------------- !  ________________________________________             !
 A Activation  C C !                                                       !
 P Descr. R Recov. !  Enter--PF1-----PF3-------PF5--------------PF9---------  !
                   !         Help    End       Save             Delete      !
 Command => ______ +-------------------------------------------------------+
Enter-PF1---PF2---PF3---PF4---PF5---PF6---PF7---PF8---PF9---PF10--PF11--PF12---
      Help  Add   End         Save        Up    Down                    Menu
```

 Copyright © Software AG 2003

# Field Descriptions: Symbol Modification

Meaning of the input fields:

| Field | Description | | |
|---|---|---|---|
| Set Contents of Symbol | A symbol or a symbol substring can be set or modified depending on the occurrence of any event. | | |
| in Symbol Table | Symbol table to be used. | | |
| Run | Run number to be used. If empty (zero), a master symbol will be modified. | | |
| at Position | Enter position of symbol substring to be set. Possible values: 1 through 80.<br>Default: 1. | | |
| in Length | Enter length of symbol substring to be set. Possible values: 1 through 80.<br>Default: 80. | | |
| with Format | Enter format in which the symbol substring is to be set. Possible values: | | |
| | **A** | alphanumeric | |
| | **L** | alphanumeric (lower case) | |
| | **U** | alphanumeric (upper case) | |
| | **N** | numeric | |
| to Value | The value to be set into the complete symbol or a substring of the symbol. | | |

# Special PF Keys: Symbol Modification

You can perform the following function from the Symbol Modification window using this PF key:

| Key | Name | Function |
|---|---|---|
| PF9 | Delete | Delete the complete symbol setting definition. |

# Active Job Networks - Overview

This section covers the following topics:


- Overview
- Active Data Base
- Maintaining Active Job Networks
- Maintaining Active Jobs
- Maintaining Active Conditions


---

## Overview

Entire Operations allows extensive modification of job networks and jobs after activation.

This section explains the maintenance functions you can perform on active jobs and networks using the Active Job Networks option on the Main Menu.

For example, you can modify active copies of a job definition, including associated logical conditions, resources and JCL. All modifications to active jobs take place on the active data base and are valid for the current job run only, so that all original definitions on the master data base remain unchanged.

Your user profile must contain the appropriate authorization to access active networks.

 Copyright © Software AG 2003

# Active Database

This section covers the following topics:

- Introduction to Jobs and Active Data Bases
- Maintaining Active Job Networks and Individual Active Jobs

## Introduction to Jobs and Active Data Bases

When Entire Operations activates a job network, a copy of the network defined in the master data base is made on the active data base and a run number assigned to it. Several copies of the same network can be in the active data base, each distinguished by its run number.

At this point, all jobs are ready for execution according to their dependencies. They are said to be 'in the active data base'. However, not all jobs in the active data base become operating system jobs: for example, dummy-type jobs or Natural programs are Entire Operations jobs which are not submitted to the operating system. As a result, we can distinguish between two groups of jobs in the computer center:

- **Jobs in the Entire Operations active data base** (including jobs not submitted to the operating system);
- **Operating system jobs** (including jobs not defined to Entire Operations).

Below is a graphic representation of these two groups:

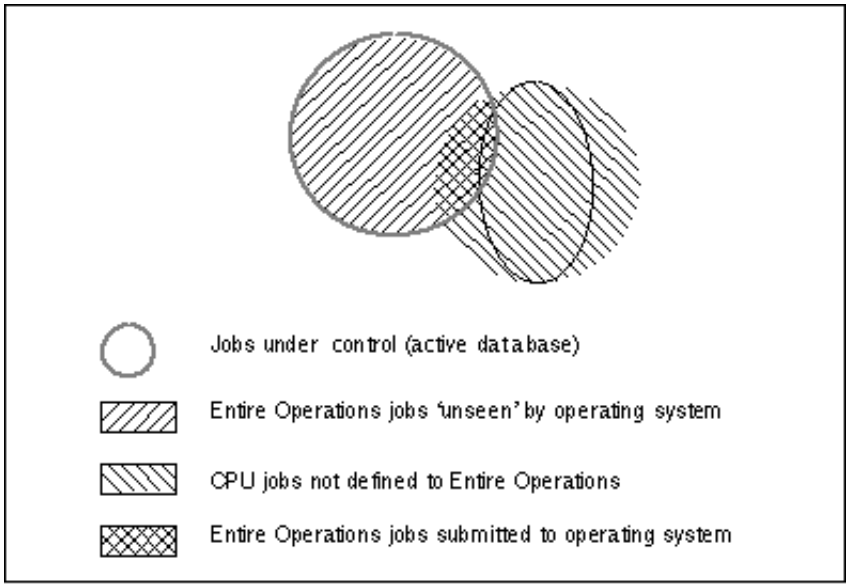


The white circle contains all jobs under Entire Operations control. Entire Operations cannot control jobs that are not defined to it.

Jobs outside Entire Operations run on the computer unaffected and "unseen" by the Entire Operations Monitor. On the other hand, Entire Operations holds information on jobs that run 'unseen' by the operating system.

The active data base is located on the Entire Operations active data base and contains all operational information of the current run of the activated job networks.

You can access the active data base to maintain active networks and jobs, including logical conditions, resources and scheduling parameters.

# Maintaining Active Job Networks and Individual Active Jobs

The following subsections describe how you can maintain active job networks and individual active jobs.

- Maintaining Active Job Networks
- Maintaining Active Jobs
- Maintaining Active Conditions

 Copyright © Software AG 2003

# Maintaining Active Job Networks

This section covers the following topics:

- Invoking the Active Job Networks Screen
- Active Job Network List: Details
- Deactivating an Active Job Network
- Operating System Information on Tasks
- Next Scheduled and Network Activations
- Displaying Execution History for Network
- Listing All Active Jobs
- Restrictions

# Invoking the Active Job Networks Screen

**To maintain active job networks**

- Select the Active Job Networks option from the Main Menu.

  The Active Job Networks screen appears:

```
 20.10.01                *** Entire Operations 4.1.1 ***                12:25:15
 Owner SN                       Active Job Networks
 Selection OR________
-------------------------------------------------------------------------------
 Cmd #Run Owner      Network    Node Description
          *--------- *---------
 _     3  SN         A-1        146  Time Range Test
 _     1  SN         BS2-31      31  BS2000 real
 _    12  SN         DEMO-NET   148  DEMONSTRATION NETWORK
 _     3  SN         EXCLUSIVE  148  Exclusive Condition usage
 _    12  SN         E02-IOC-01 148  I/O Conditions without events
 _     4  SN         R   769478 148  Blank in the name
 _     1  SN         R-152930   148  Symbols trailed by Blanks
 _     4  SN         S-MAILBOX  146  Some mailbox tests
 _     7  SN         SN-E01     146  Completion-Codes, Job Duration
 _
 _
 ****************************** Bottom of Data ******************************
  A Display Active Jobs N Deactivate Network P Prose T Acct X History

 Command => ____________________________________________________________
Enter-PF1---PF2---PF3---PF4---PF5---PF6---PF7---PF8---PF9---PF10--PF11--PF12---
      Help        End                     Up    Down  ATask All   NxtSt Menu
```

For further information, see Active Job Network List: Details.

 Copyright © Software AG 2003

# Active Job Networks List: Details

This subsection covers the following topics:

- Selecting Network Range to be Listed
- Column Headings
- Line Commands
- Special PF Keys

---

## Selecting Network Range to be Listed

You can specify the range of networks to be listed by entering **A**, **G**, **O** or **R** in the Selection field on the Active Job Networks screen and pressing Enter. For more information, see the section Network Maintenance, subsection Selecting Network Range to be Listed.

## Column Headings

The following table explains the column headings for the data listed on the Active Job Networks screen:

| Field | Description |
|---|---|
| Cmd | One-character line command input field. For possible values, see Line Commands: Active Job Networks. |
| #Run | Number of currently active runs of the network. |
| Owner | Owner name for the network; first line shows prefix used to obtain the current list. Enter selection criteria in this field to display networks according to owner prefix. Use an asterisk * as a wildcard for entering selection criteria. |
| Network | Network name; first line shows prefix used to obtain the current list. Enter selection criteria in this field to display networks according to network prefix. Use an asterisk * as a wildcard for entering selection criteria. |
| Node | Execution node specified for the network as default for its jobs. |
| Description | Short description of network as defined in the original job network definition on the master data base. |

You can perform several functions on active job networks using the available line commands and PF keys. These are described in the following two tables:

## Line Commands

| Cmd | Description |
|---|---|
| A | List active jobs for the selected network. |
| N | Deactivate the selected network. |
| P | Display text description of selected network (browse mode only). |
| X | Display network execution history. See also Displaying Execution History for a Network. |

# Special PF Keys

| Key | Name | Function |
|---|---|---|
| PF7 | Up | Scroll list backwards. |
| PF8 | Down | Scroll list forward. |
| PF9 | ATask | Operating System Information on All Tasks. |
| PF10 | All | List all active jobs. |
| PF11 | NxtSt | Next scheduled network activations. See also Displaying Next Network Starts (System-Wide) in the section Scheduling a Job Network. |

The following subsections give a more detailed description of the functions you can perform on active networks.

- Deactivating an Active Job Network
- Operating System Information on Tasks

 Copyright © Software AG 2003

# Deactivating an Active Job Network

There are several ways of preventing or interrupting the execution of an active job network. These are described in the following subsections.

- Deactivate a Network
- Deactivate all Networks
- Stop a Running Network

---

## Deactivate a Network

**To deactivate a network before the first job of an active network is submitted**

1. Type **N** in the line command field of the selected network on the Active Job Networks screen. Press Enter.

   A window opens in which the active copies of the selected network in the active data base are listed by run number:

```
 20.10.01                *** Entire Operations 4.1.1 ***               14:49:23
 Owner SN                       Act +-----------------------------------------+
 Selection OR________                !                                         !
-----------------------------------  !  Owner SN            Network GHH-DEMO   !
 Cmd #Run Owner      Network    No !                                         !
          SN*------- B*--------    !  Please mark the run numbers, for which  !
 n     1  SN         GHH-DEMO   14 !  active jobs are to be deactivated:      !
 _     1  SN         BS2-EX-5    3 !                                         !
 _     7  SN         BS2-31      3 !  Cmd   Run  Activation                   !
 _     1  SN         BS2A        3 !   _      2  20.10.01 12:55               !
 _                                  !   _      3  20.10.01 13:55               !
 _                                  !   _                                      !
 _                                  !   _                                      !
 _                                  !   _                                      !
 _                                  !   _                                      !
 _                                  !                                          !
 _                                  !  PF3 End      PF7 Up  PF8 Down          !
 ******************************** B +-----------------------------------------+
  A Display Active Jobs N Deactivate Network P Prose T Acct X History

 Command => ____________________________________________________________
Enter-PF1---PF2---PF3---PF4---PF5---PF6---PF7---PF8---PF9---PF10--PF11--PF12---
      Help        End                     Up    Down  ATask  All NxtSt  Menu
```

2. Select the run to be deactivated by entering any character in the appropriate line command field in the window. Press Enter.

   **Note:**
   The message **In Progress** indicates that the command has been accepted. The job is deactivated in **background** by the Monitor.
   If the Monitor is not active, you can deactivate a job using the Special Functions - Deactivation in Foreground option of the System Administrator Services Menu.

3. Press PF3 (End) to close the window.

# Deactivate all Networks

To halt the execution of all job networks, the system administrator can stop the Entire Operations Monitor. Jobs currently being executed continue until normal termination, unless they are explicitly cancelled from the operating system.

# Stop a Running Network

To interrupt a running network, you simply need to add an input condition, e.g. WAIT-HERE, for the job before which the network is to stop running, and ensure that it will not be set. For more information, see the subsection Maintaining Input Conditions of Active Jobs.

To restart the network at the point of interruption, you can manually set the input condition, or remove it from the active job definition. (see the subsection Maintaining Active Jobs).

 Copyright © Software AG 2003

# Operating System Information on Tasks

This subsection covers the following topics:

- Invoking the All Active Tasks Screen
- Listing Active Tasks according to Node
- Listing Active Tasks according to Type
- Column Headings

---

## Invoking the All Active Tasks Screen

**To display operating system information on active tasks**

1. Press PF9 (ATask) from the Active Job Networks screen.

   The All Active Tasks screen appears:

```
 20.10.01               *** Entire Operations 4.1.1 ***              12:26:47
                                All Active Tasks
 Node ==> 146  MVS/XA                                            Type ==> JOB
 ---------------------------------------------------------------------------
 DP  ID Type Num   Name     Step     Proc     Status   Disp  Region   CPU
  91 A1 JOB   4978 UKANUC   NUC               NON-SWAP YES   496     0.31
  91 A4 JOB   4812 PHOTST   MESS3                      YES 29568    80.98
 255 17 JOB   2810 SNBAT    EOR141            SWAP-OUT NO  29104   268.19
 255 18 JOB   4808 DLNUC2A  EASYNUC           SWAP-OUT NO  36896    23.06
  87 24 JOB   4769 NQAN23X  STEP01   REGION   NON-SWAP YES   480     0.30
  88 25 JOB   5044 IMSMAF2D STEP01   REGION   NON-SWAP YES   928     0.58
  85 27 JOB   4161 NDBM230  NDBM230  REGION   NON-SWAP YES 18720    11.70
  87 30 JOB   3465 NIIM22   STEP01   REGION   NON-SWAP YES   464     0.29





 ******************************** Bottom of data ******************************
 Command => ____________________________________________________________________
Enter-PF1---PF2---PF3---PF4---PF5---PF6---PF7---PF8---PF9---PF10--PF11--PF12---
      Help        End                           Down
```

   This screen displays information on all active tasks running on the operating system, including jobs not defined to Entire Operations (MVS only).

## Listing Active Tasks according to Node

**To select an Entire System Server node for which the tasks are to be listed**

1. Enter a node number in the Node field in the upper left-hand corner of the All Active Tasks screen.

   (Alternatively, you can enter an asterisk *, press Enter to open a selection window for nodes and mark a listed node with any character.)

2. Press Enter.
3. The All Active Tasks screen lists tasks for the selected node only.

# Listing Active Tasks according to Type

**To list active tasks according to type**

1. Enter one of the following values in the Type field in the upper right-hand corner of the screen (shortest possible input underlined):

| Type | Description |
|---|---|
| (blank) | Show all types. |
| * | Show all types. |
| INI | JES2 initiator. |
| JOB | Batch jobs (default). |
| STC | Started tasks. |
| TSU | TSO users. |

   The operating system information which appears immediately after the node number cannot be modified.

2. Press Enter.

   The All Active Tasks screen lists tasks of the selected type only.

# Column Headings

The following table explains the column headings for the data listed on the All Active Tasks screen:

 Copyright © Software AG 2003

| Field | Description | |
|---|---|---|
| DP | Dispatching priority assigned by operating system. | |
| ID | JES2 batch initiator identifier (for JOB-type tasks only). | |
| Type | Type of job. Corresponds to the value entered in Type field (see the subsection Listing Active Tasks according to Type). | |
| Num | Operating system job number. | |
| Name | Operating system job name (job card name). | |
| Step | Name of job step currently being executed. | |
| Proc | Name of procedure currently being executed. | |
| Status | Status of address space. Possible values: | |
| | **V=R** | Running in real memory. |
| | **TERM** | Address space is terminating. |
| | **NON-SWAP** | Address space cannot be swapped. |
| | **SWAP-OUT** | Address space is swapped out. |
| | **(blank)** | Address space is swapped in. |
| Disp | Dispatchability of address space: | |
| | **YES** | Address space is dispatchable. |
| | **NO** | Address space is not dispatchable. |
| Region | Amount of real storage used by address space (in Kbytes). | |
| CPU | Amount of CPU consumed by address space (to one-hundredth of a second). | |

Operating system information is offered as a view only and cannot be modified.

# Next Scheduled Network Activations

**To list all next scheduled and manual network activations**

- Press PF11 (NxtSt) on the Active Job Networks screen.

  The Next Scheduled and Manual Network Activations screen appears.

  For further information, see the subsection Displaying Next Network Starts (system-wide) in the section Scheduling a Job Network.

 Copyright © Software AG 2003

# Displaying Execution History for Network

**To display execution history for a selected network**

1. Type **X** in the line command input field of the appropriate network on the Active Job Networks screen.
2. Press Enter.

   The History screen appears for the selected network.

For further information, see the subsection Displaying Execution History for a Network in the section Scheduling a Job Network.

# Listing All Active Jobs

**To list all active jobs under the control of Entire Operations**

- Press PF10 (All) on the Active Job Networks screen.

  The Active Jobs screen appears:

```
   20.11.01              *** Entire Operations 4.1.1 ***              11:00:49
                                  Active Jobs
 Selection AW________                                   Submit User ID ________
-------------------------------------------------------------------------------
 C Owner      Network    Job          Run    JobId  Time Message
   *--------- *--------- *---------
 _ EXAMPLE    E20-DYN-01 -            303          10:47 Activation Net 08.09 1
 _ EXAMPLE    E20-DYN-01 -            304          10:47 Activation Net 10.09 1
 _ EXAMPLE    E40-REC-01 E40-J01     1686          13:13 E40-J02-PARM SET TO SE
 _ EXAMPLE    E40-REC-01 E40-J02     1686     1907 13:16 Ended ok
 _ EXAMPLE    E40-REC-01 E40-J03     1686     1909 13:16 Ended ok
 _ EXAMPLE    E40-REC-01 E40-J99999  1686          13:16 Dummy Job terminated
 _ EXAMPLE    E40-REC-01 E40-J01     1687          13:13 E40-J02-PARM SET TO SE
 _ EXAMPLE    E40-REC-01 E40-J02     1687     1908 13:16 Ended ok
 _ EXAMPLE    E40-REC-01 E40-J03     1687     1910 13:16 Ended ok
 _ EXAMPLE    E40-REC-01 E40-J99999  1687          13:16 Dummy Job terminated
 _ EXAMPLE    E40-REC-01 E40-J01     1688          16:00 E40-J02-PARM SET TO SE
 ******************************************************************************
 A Sched.Parms C Cancel D Deact E Edit G Gen.JCL H Hold I Input Cond J JCL
 L Res. M Modify O EOJ P Prose R Resubmit S Sysout U Release W Waiting for
 Command => ____________________________________________________________
Enter-PF1---PF2---PF3---PF4---PF5---PF6---PF7---PF8---PF9---PF10--PF11--PF12---
      Help  Add   End   ACond Save        Up    Down  ATask Left  Right Menu
```

This Active Jobs screen lists **all** active jobs under the control of Entire Operations. Additionally, network runs are listed where activations are planned and in the process, but not yet completed. By contrast, the Active Jobs screen under Maintaining Active Jobs lists all active jobs in the network selected from the Active Job Networks screen.

 Copyright © Software AG 2003

# Restrictions

This subsection covers the following topics:

- Prerequisites
- Listing All Active Jobs
- Column Headings
- Line Commands
- Special PF Keys

---

## Prerequisites

If the user is of type **A** (Administrator), or if the user has access to the owner SYSDBA, then all active jobs are displayed.
In all other cases, the following active jobs are displayed:

- from networks of the current owner
- from networks of owners, to which the user has access
- from networks, for which the user has been granted access (see Authorizing Other Users to Access a Network) in the section Network Maintenance.

## Listing All Active Jobs

- According to Owner, Network and Job
- According to Submit User ID
- According to Status

### According to Owner, Network and Job

You can list active jobs for selected Owner(s), Network(s) and/or Job name(s).
Use an asterisk * as a wildcard to enter selection criteria in the fields preceded by an asterisk * directly below the respective column headings.
Press Enter to list the active jobs which satisfy the selection criteria.

### According to Submit User ID

Enter a Submit Userid in the field in the upper right-hand corner of the screen and press Enter to list only those active jobs with the selected Submit User ID.

The entered Submit Userid is **not** converted in capital letters. The exact spelling is required. Thus, UNIX and Windows userids can be entered as well.

### According to Status

See the subsection Listing Active Job Status in the section Maintaining Active Jobs.

# Column Headings

The following table explains the column headings for the data listed on the Active Jobs screen:

| Column | Description |
|---|---|
| C | One-character line command input field. For possible values, see Line Commands: Active Jobs in the section Maintaining Active Jobs. |
| Owner | The network owner. Use an asterisk * as a wildcard for entering selection criteria. |
| Network | The network to which the job belongs. Use an asterisk * as a wildcard for entering selection criteria. |
| Job | The job name as defined to Entire Operations. Use an asterisk * as a wildcard for entering selection criteria. Lines referring to a network run are identified by a "-" in this field. |
| Run | Job run number automatically assigned at activation time. Together with the job name, the job run number uniquely identifies an active copy of a job. |
| JobId | Job identifier as assigned by the operating system or by the job entry subsystem. |
| Time | Last action or check time for the job. |
| Message | Last message issued for the job by Entire Operations. Press <PF11> (Right) or <PF10> (Left) to display the full message text. For a list of possible messages and their meaning, see Messages in Active Job Display. |

# Line Commands

For a description of the available line commands, see Line Commands: Active Jobs.

**Note:**
Most of these line commands refer to a specific job and may therefore not be used in lines referring to network runs. For these lines, only the commands **D** and **A** are allowed.

# Special PF Keys

For a description of available PF keys, see Special PF Keys: Active Jobs.

 Copyright © Software AG 2003

# Maintaining Active Jobs

This section covers the following topics:


- Accessing the Active Jobs Screen
- Active Job List: Status Selection
- Active Jobs According to Run Number
- Adding a Job to the Active Network
- Modifying a Job in an Active Network
- Special Type D - Execution as a Dummy
- Define Job Control for the Active Job
- Exchanging Active JCL
- Deactivating a Job in an Active Network
- Cancelling a Planned Job Activation
- Maintain Input Conditions of Active Jobs
- Jobs Concatenated with Input Condition
- Modifying EOJ Checking and Actions
- Maintaining Resources for Active Jobs
- Modifying Scheduling Parameters
- Cancel, Hold and Release Active Jobs
- Browsing through Active Job Sysout
- Resubmitting an Active Job
- Resubmitting Sub-networks
- No Re-loading after Editing
- Regeneration or Generation of Active JCL
- Resubmit Job after Re-generation of JCL
- Re-generation of JCL for Sub-networks
- Active Jobs Online Documentation
- Displaying Prerequisites for Active Job
- Display Use of an Input Condition
- Display Use of Resources
- Editing Active JCL

# Accessing the Active Jobs Screen

This subsection covers the following topics:

- Invoking Active Jobs
- Column Headings: Active Jobs
- Line Commands: Active Jobs
- Special PF Keys: Active Jobs

---

## Invoking Active Jobs

**To access the active data base (of one network) for active job maintenance**

1. Type **A** in the line command input field of the selected network on the Active Job Networks screen.
2. Press Enter.

   The Active Jobs screen appears:

```
31.01.02              *** Entire Operations 4.1.1 ***              15:34:41
 Owner  SN                        Active Jobs               Network A-1
 Selection AW________                                   Run from 3520_ to 3520_
-------------------------------------------------------------------------------
 C   Job          Run Typ    JobId Node Date  Time Message
     *---------
 _   CYC-1       3520 CYC          146 31.01 15:03 Latest Start 31.01 15:00 exc
 _   DEADLINE-1  3520 JOB    41654 146       12:20 Ended ok
 _   D1          3520 DUM          146       12:00 Dummy Job terminated
 _   EMPTLINE    3520 JOB    41655 146       12:01 Ended ok
 _   HBUCOND     3520 JOB    41656 146       12:01 Ended not ok - RETCD0 S806 R
 _   HUGO-1      3520 JOB          148       15:00 Latest Start 31.01 15:00 exc
 _   IEFBR14     3520 JOB          146       15:00 Latest Start 31.01 15:00 exc
 _   IEFBR14-53  3520 JOB    41657  53       12:01 Ended ok
 _   IEFBR15     3520 JOB          409       10:00 JCL Load - Invalid User ID h
 _   IEFBR15A    3520 JOB          409       12:00 Submit - Logon failed, Node
 _   IMP-TEST    3520 JOB          146       10:00 No JCL found for IMP-TEST
 ************************************* m o r e ********************************
 A Sched.P C Cancel D Deact E Edit G Gen.JCL H Hold I Input Cond J JCL K A.Res.
 L Resrc. M Mod. O EOJ P Prose R Resub. S Sysout U Rel. W W.for Y SubC Z Subnet
 Command => ____________________________________________________________
Enter-PF1---PF2---PF3---PF4---PF5---PF6---PF7---PF8---PF9---PF10--PF11--PF12---
      Help  Add   End   ACond Save  ResUs Up    Down  ATask Left  Right Menu
```

This screen lists all active jobs in the network.

You can use line commands and PF keys on this screen to modify active jobs.

Modifications of active jobs are always ad-hoc changes, that is, they are effective for this specific run of the job only and do not affect any definition made on the master data base. This also applies to changes made to active job JCL, input conditions and end-of-job checking and actions.

### Selection

You may restrict the list to jobs with special status values. For further information, please see Active Jobs List: Status Selection.

 Copyright © Software AG 2003

# Column Headings: Active Jobs

The following table explains the column headings for the data listed on the Active Jobs screen:

| Column | Description | |
|---|---|---|
| C | One-character line command input field. For possible values, see Line Commands: Active Jobs. | |
| (no heading) | There is another column without a heading between **C** and **Job**. Possible values: | |
| | **D** | This is a dummy job. For more information, see the subsection Job Types in the section Job Maintenance. |
| | **R** | This is a recovery job. For more information, see the section End-of-Job Checking and Actions, subsection Defining Recovery Action. |
| Job | Job name as defined to Entire Operations. Use an asterisk * as a wildcard for entering selection criteria. | |
| Run | Job run number automatically assigned at activation time. Together with the job name, the job run number uniquely identifies an active copy of a job. | |
| Typ | Job type as defined to Entire Operations. | |
| JobId | Job identifier as assigned by the operating system or by the job entry subsystem. | |
| Node | Execution node of the machine designated for the job. | |
| Date | Last action or check date for the job. | |
| Time | Last action or check time for the job. | |
| Message | Last message issued for the job by Entire Operations. Press <PF11> (Right) or <PF10> (Left) to display the full message text. For a list of possible messages and their meaning, see Messages in Active Job Display. | |

# Line Commands: Active Jobs

Use the following line commands to perform the described functions on the active jobs listed on the Active Jobs screen:

| Cmd | Description |
|---|---|
| A | **For active networks**: Modify scheduling parameters for the active job.<br>**For planned network runs**: Modify Planned Network Start Time. |
| C | Cancel the active job from the operating system. |
| D | **For active networks**: Deactivate the selected job from the active data base, including any definitions made at job level (conditions, end-of-job handling etc.).<br>**For planned network runs**: Cancel the planned job activation. |
| E | Edit the activated JCL for the selected active job. |
| G | (Re-)generate the dynamic JCL for this activation. |
| H | Set active job in HOLD status. |
| I | Modify the defined input conditions for the active job. |
| J | Define job control for the active job. |
| L | Maintain resources for the active job. |
| M | Modify definition for the active job. |
| O | Modify end-of-job checking and actions for the active job. |
| P | Text description of the job. |
| R | Resubmit active job. |
| S | Browse job sysout. |
| U | Release active job from HOLD status. |
| W | Display all pending prerequisites for the active job. |
| Y | Show the calling job (If this active job is part of an active sub-network) |
| Z | List jobs in sub-network (for jobs of type NET only). |

# Special PF Keys: Active Jobs

Use the following PF keys to perform the described functions on the active jobs listed on the Active Jobs screen:

| Key | Name | Function |
|---|---|---|
| PF2 | Add | Add an active job definition. |
| PF4 | ACond | Maintain active conditions. |
| PF9 | ATask | Display operating system information on active tasks. |
| PF12 | Menu | Return to Entire Operations Main Menu. |

The following subsections describe in more detail the ad-hoc functions you can perform on active jobs using line commands and PF keys (explanations are not necessarily given in the same order as the list of associated line commands above).

 Copyright © Software AG 2003

# Active Job List: Status Selection

- You can list active jobs according to their processing status by entering one or more of the following values in the Selection field on the Active Jobs screen and pressing Enter:

| Value | Description |
|---|---|
| A | All active jobs (default). |
| E | All active jobs waiting for at least one event. |
| H | All jobs in HOLD. |
| I | All jobs in the scheduling system input queue. |
| N | All jobs with **job not OK** terminating status. |
| O | All jobs with **job OK** terminating status. |
| S | All submitted jobs. |
| T | All terminated jobs. |
| W | Planned network runs waiting for activation. |
| X | All jobs in execution. |

The default setting is **AW** (all active jobs and the planned network runs waiting for activation).

- Alternatively, you can enter an asterisk * in the Selection field and press Enter, to open the following selection window:

```
 15.10.01               *** Entire Operations 4.1.1 ***              15:17:46
 Owner  SN                        Active Jobs                Network DEMO-NET
 Selection ?_________                                     Run from 198__ to 198__
---------- +-------------------------------+----------------------------------
 C   Job   !                               !me  Message
     *---- !      Status Preselection      !
 _   MESSA !                               !:24 Dummy Job beendet
 _   JOB1  !  W   Waiting for Activation   !:27 Ok beendet
 _   JOB2  !  A   All active Jobs          !:00 Letzte Startzeit 11.07 11:00 u
 _   JOB4  !  E   Waiting for an event     !:22 MACRO Programm DYN01 nicht gef
 _   RECOV !  H   Jobs in Hold             !:22 LIBRARY FULL - 198  - RUN nich
 _   JOB3  !  S   Submitted                !:00 Letzte Startzeit 11.07 11:00 u
 _         !  I   In Spool Input Queue     !
 _         !  X   Executing                !
 _         !  T   Terminated               !
 _         !  O   Ended ok                 !
 _         !  N   Ended not ok             !
 ********* !                               !ta ******************************
 A Sched.P !     Select ==>  A_________    !JCL H Hold I Input Cond L Resource
 M Modify  +-------------------------------+ Release W Waiting for
 Command => ____________________________________________________________
Enter-PF1---PF2---PF3---PF4---PF5---PF6---PF7---PF8---PF9---PF10--PF11--PF12---
      Help  Add   End   ACond Save        Up    Down  ATask Left  Right Menu
```

Enter one or more values in the Select ==> field and press Enter to list the active jobs with the selected status(es).

# Active Jobs According to Run Number

By default, only jobs of the **last run** are displayed.

**To list more job runs**

- enter selection criteria in the **Run from ... to** field in the upper right-hand corner of the screen and press Enter.

For example, if you enter **7** in the Run from field, all jobs with run number equal to or greater than **7** are listed. If you enter **4** in the Run from field and **7** in the **to** field, all jobs with run numbers **4**, **5**, **6** and **7** are listed.

This setting is kept until you modify it or until you display the Active Jobs screen for another network.

 Copyright © Software AG 2003

# Adding a Job to the Active Network

This subsection covers the following topics:

- Adding a Job
- Field Descriptions
- Special PF Keys
- Example
- Achieving a Sequential Flow

---

## Adding a Job

**To add a job to the active data base for the current run of an active job network**

1. Press PF2 (Add) from the Active Jobs screen.

   A window opens in which you can define the new active job:

```
 15.10.01                *** Entire Operations 4.1.1 ***                13:06:01
 Owner  SN                        Active Jobs                Network DEMO-NET
 Selection A_________                                     Run from 167__ to 167__
- +-------------------------------------------------------------------+ ---
  ! NOP1129 - Job Definition for .TEMP. added                           !
  !                         Active Job Definition                      !
  !                                                                    !
  !  Job Name       ==> .TEMP.____      Activated          15.10.01 13:06 !
  !  Run            ==> 167             Modified  GHH      15.10.01 13:06 ! cee
  !  Description    ==> ______________________________                  ! nd
  !  Job Type       ==> ___                  Symbol Table ==> __________  ! ot
  !  Execution Node ==> 148  MVS/XA     BS2000 Sub Userid ==> ________   ! cee
  !  Special Type   ==> _                       Escape Act ==> _ Sub ==> _ !
  !  Restartable    ==> _                                               !
  !                                                                    !
  !  JCL Location   ==> ___                                             !
  !  JCL Node       ==> 148  MVS/XA     BS2000 Def Userid ==> ________   !
  !  Dsname/Natlib  ==> ____________________________________________    ! ***
  !  Member         ==> ________ ________                               ! rce
  !  Volser         ==> ______  (if not catlgd)  Password ==>           !
  ! Enter-PF1---PF2---PF3---PF4---PF5---------PF7------PF9---------PF12-- !
E !       Help  Add   End   Edit  Save        Symb     Spec        Menu  ! ---
  +-------------------------------------------------------------------+ a
```

2. Enter a new job definition for the current network run.

## Field Descriptions

The input fields in this window have the same meaning as for the Master Job Definition screen in the Network and Job Maintenance facility (see the section Job Maintenance, subsection Field Descriptions: Master Job Definition).

The Active Job Definition window, however, contains the following additional fields which are protected:

| Field | Description |
|---|---|
| Activated | The activation date and time of the network. |
| Modified | User ID and time stamp of the last modification. |
| Run | Run number of the current job run. |

# Special PF Keys

| Key | Name | Function |
|---|---|---|
| PF2 | Add | Add an active job to the active network. No master job definition is created. JCL is automatically loaded after the job has been added. |
| | | **Note:**<br>A job is not automatically activated after being added to an active network. The job is first put into HOLD status and additional definitions can be added, for example active time frames or similar. To activate the job, you must enter the line command **U** on the Active Jobs screen. |
| PF4 | Edit | Edit JCL or a Natural program, according to job type. |
| PF7 | Symb | Display the active symbol table specified in the Symbol Table field.<br>You can define or modify it. |
| PF9 | Spec | Define special parameters for operating-system-dependent job definitions. |

3. Press PF5 (Save) to add the active job.
4. Press PF3 (End) to close the Active Job Definition window.

   The new active job(s) appear on the Active Jobs screen.

   Adding a job to an active job network involves temporarily changing the network structure and job flow. This is achieved with the minimum of effort, as the following example shows.

# Example

You may wish to add a job to a network for one specific run.

This example illustrates the addition of a job to a network consisting of **3** sequential jobs. The new job (Job **4**) is to be inserted between Job **1** and Job **2**:

 Copyright © Software AG 2003

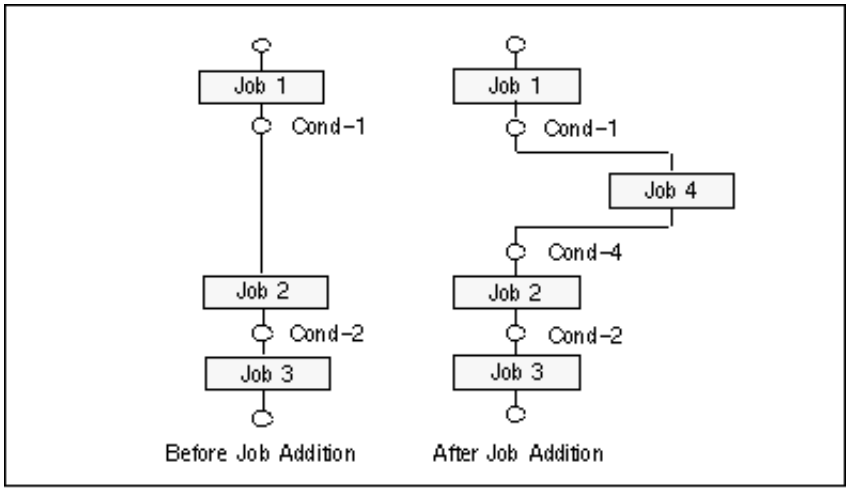


# Achieving a Sequential Flow

**To achieve a sequential job flow, proceed as follows:**

1. Add the new active job using the Active Job Definition window;
2. Define **Cond-1** as input condition for Job **4**;
3. Define **Cond-4** as output condition in end-of-job handling for Job **4**;
4. Change the input condition defined for Job **2** (**Cond-1**) to **Cond-4**.

   **Job 4** is executed for the current run of the job network only.

   If you wish this change to be permanent, use this procedure on the master data base.

# Modifying a Job in an Active Network

**To modify the definition of an existing job in an active job network**

1. Type **M** in the line command field of the selected job on the Active Jobs screen.
2. Press Enter.

   The Active Job Definition window opens displaying all current values of the existing job. You can modify any job parameter.

3. Press PF4 (Edit) to edit any JCL or Natural program according to job type.
4. Press PF5 (Save) to save all changes.
5. Press PF3 (End) to close the window and return to the Active Jobs screen.

   These changes only affect the current run of the job.

   **Notes:**

   1. The current user ID is stored as the last modifying user of the job for all definition and JCL modifications. This user ID is taken as the **submit security user ID**.
      If the Monitor does not use its own user ID, see the subsection Monitor Defaults - Submit Security User Type in the Entire Operations Administration Documentation.
   2. It may be necessary to release the active job after the modification with the line command **R** (resubmit). This causes a new check of all prerequisites.

 Copyright © Software AG 2003

# Special Type D - Execution as a Dummy

In an active job definition, it is possible to modify the field ’Special Type’ from ’empty’ to ’D’ (execution as a dummy), and vice versa.

- If ’Execution as a Dummy’ is **deleted**, then an automatic re-loading of the JCL will occur. In case of active jobs of the NET type, the sub-network is activated.
- If ’Execution as a Dummy’ is **set**, then the job will be executed as a dummy job. In this case, it does not play any role, whether already active JCL or an active sub-network were loaded.

# Define Job Control for the Active Job

**You can insert or modify the job control definition of an active job**

1. Type **J** in the line command field of the selected job on the Active Jobs screen.
2. Press Enter.

   The JCL Definition window opens displaying the current definitions.

   How to modify the JCL definition is described in the section Job Maintenance.

   **Note:**
   The modifications to the JCL definition of an active job are only valid for the current run.

 Copyright © Software AG 2003

# Exchanging Active JCL

When modifying an active job, you can specify another JCL member and library by overtyping the current values in the corresponding input fields. This allows you to run a different job in place of the old one using the same input conditions, end-of-job handling, etc. The replacement is valid for the current network run only.

When you have specified a different JCL member and/or library, Entire Operations replaces the old JCL with the new and notifies you of the replacement with a message. The new member can use the Dynamic JCL Generation facility.

**Note:**
After exchanging the JCL, the job must be restarted with the line command **R** (repeat). For further information, see Resubmitting an Active Job.

# Deactivating a Job in an Active Network

This subsection covers the following topics:

- Deactivating a Job
- Example: Ad-hoc Deactivation of a Job
- Ensuring Uninterrupted Job Flow

## Deactivating a Job

**To prevent the execution of a certain job in an active network for the current run**

1. Type **D** in the line command input field of the selected job on the Active Jobs screen. Press Enter.
2. A window opens in which you must confirm deactivation by typing **Y** in the appropriate field:

```
 15.10.01               *** Entire Operations 4.1.1 ***               11:02:24
 Owner  SN                       Active Jobs                 Network DEMO-NET
 Selection A_________                                   Run from 199__ to 199__
-------------------------------------------------------------------------------
 C   Job          Run Typ JobId Node Date  Time  Message
     *---------
 _   MESSAGE      199 DUM        148 11.07 09:15 Dummy Job beendet
 _   JOB1         199 JOB  3640  148 11.07 09:15 Ok beendet
 d   JOB2         199 DUM        148 11.07 09:30 PAPER-READY - 199  - RUN nicht
 _   JOB4      +----------------------------------------------+ DYN01 nicht gef
 _   RECOVER   !                                              ! 199  - RUN nich
 _   JOB3      !  Please confirm                              ! - RUN nicht gef
 _             !  the Deactivation of JOB2                    !
 _             !  by entering 'Y' ===> _                      !
 _             !                                              !
 _             !  PF3 End                                     !
 _             +----------------------------------------------+
 ******************************** Bottom of Data ******************************
 A Sched.Parms C Cancel D Deact E Edit G Gen.JCL H Hold I Input Cond L Resource
 M Modify O EOJ P Prose R Resubmit S Sysout U Release W Waiting for
 Command => ____________________________________________________________________
Enter-PF1---PF2---PF3---PF4---PF5---PF6---PF7---PF8---PF9---PF10--PF11--PF12---
      Help  Add   End   ACond Save        Up    Down  ATask Left  Right Menu
```

3. Press Enter to deactivate the job.

   The job is deactivated in **background** by the Monitor.

   Deactivating a job from the active network involves deleting it from the active job network and restructuring the active network in order to ensure uninterrupted job flow. The following example illustrates job deactivation by bypassing a job in an active network consisting of three sequential jobs:

## Example: Ad-hoc Deactivation of a Job

The network in the following figure is to run without Job 2:

 Copyright © Software AG 2003

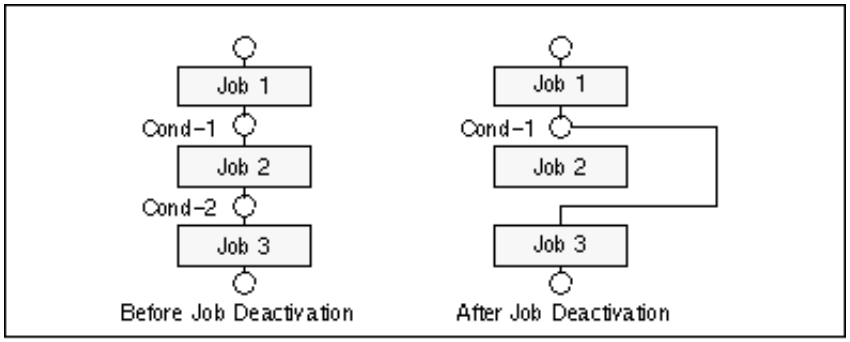


# Ensuring Uninterrupted Job Flow

**To ensure uninterrupted job flow, proceed as follows:**

1. To prevent Job 2 from running, it is sufficient to delete its input condition Cond-1. If you deactivate Job 2 from the Active Jobs screen, the input condition is automatically deleted;
2. Replace input condition for Job 3 (Cond-2) by input condition Cond-1 using the MODIFY command for Cond-2.

   The current run of the job network skips Job 2.

   If you wish to deactivate a job that is currently running (interrupt its execution), you must cancel it from the operating system before deactivation (see the subsection Cancelling, Holding and Releasing Active Jobs).

Cancelling a Planned Job Activation

# Cancelling a Planned Job Activation

Cancel the planned activation of a job in a planned network run that is waiting for activation(jobs listed when W is entered in the Selection field at the top left of the Active Jobs screen)

**To do so:**

1. Type **D** in the line command input field of the selected job on the Active Jobs screen.
2. Press Enter.
3. A window opens in which you must confirm cancellation:

```
 15.11.01               *** Entire Operations 4.1.1 ***              11:06:27
 Owner  EXAMPLE                   Active Jobs                Network E60-FLOW
 Selection AW________                                     Run from 1____ to 2000_
-------------------------------------------------------------------------------
 C   Job          Run Typ    JobId Node Date  Time Message
     *---------
 _   -           1771                  13.03 00:00 Symbol Prompting in Progress
 d   -           1860                  16.08 00:01 Awaiting Symbol Prompting
 _   -           1862                  21.08 00:00 Awaiting Symbol Prompting
 _   -         +---------------------------------------------+ ol Prompting
 _   -         !                                             ! ol Prompting
 _   -         !  Please confirm                             ! ol Prompting
 _   -         !  Start Cancel of E60-FLOW (1860)            ! ol Prompting
 _   -         !  by entering E60-FLOW                       ! ol Prompting
 _   -         !          ==> ______________________________  ! ol Prompting
 _   -         !  PF3 End                                    ! ol Prompting
 _   -         +---------------------------------------------+ ol Prompting
 ******************************************************************************
 A Sched.Parms C Cancel D Deact E Edit G Gen.JCL H Hold I Input Cond J JCL
 L Resource M Modify O EOJ P Prose R Resubmit S Sysout U Release W Waiting for
 Command => ____________________________________________________________
Enter-PF1---PF2---PF3---PF4---PF5---PF6---PF7---PF8---PF9---PF10--PF11--PF12---
      Help  Add   End   ACond Save        Up    Down  ATask Left  Right Menu
```

4. Enter the name of the job to be cancelled.
5. Press Enter to cancel the planned job activation.

 Copyright © Software AG 2003

# Maintain Input Conditions of Active Jobs

You can define new input conditions for an active job, or delete or modify existing conditions.

**To invoke the Input Condition Maintenance facility for an active job**

1. Type **I** in the line command field of the selected job on the Active Jobs screen.
2. Press Enter.

   A list of input conditions for the selected job appears.

   This screen has the same format as the Input Condition Maintenance screen in the Job Maintenance facility on the master data base (see the subsection Input Condition Maintenance in the section Job Maintenance).

   You can now maintain input conditions in the same way as described for the original definition, except that modifications to conditions for active jobs are valid for the current job run only.

# Jobs Concatenated with Input Condition

This screen contains other headers than the corresponding function for master input conditions (see Adding Master Input Condition in the section Job Maintenance).

```
04.10.01               *** Entire Operations 4.1.1 ***               17:26:59
 Owner REQUEST            Input Conditions Maintenance           Job B-FILESILO
 Network R302137                                   Lauf 10    Datum 04.10.01
-------------------------------------------------------------------------------
 +-----------------------------------------------------------------------------+
 !                                                                             !
 !  Owner   REQUEST                       Condition FILESILO-START             !
 !  Network R302137A                      Ref.type  ABS                        !
 !                                                                             !
 !  Output Condition of                    Input Condition for                 !
 !  -------------------------------------+------------------------------------ !
 !  Owner Network    Job            Run ! Owner Network    Job            Run !
 !                                      !       R302137    B-FILESILO      10 !
 !                                      !                                      !
 !                                      !                                      !
 !                                      !                                      !
 !                                      !                                      !
 !                                                                             !
 !  ---PF1---PF2---PF3---PF4---PF5---PF6---PF7---PF8---PF9---PF10------------ !
 !                 End                     Up    Down                         !
 +-----------------------------------------------------------------------------+
Enter-PF1---PF2---PF3---PF4---PF5---PF6---PF7---PF8---PF9---PF10--PF11--PF12---
      Help  Add   End   ACond Save        Up    Down                    Menu
```

 Copyright © Software AG 2003

# Modifying EOJ Checking and Actions

**To modify the end-of-job checking and actions for the current run of a specific job**

1. Type **O** in the line command input field of the selected job on the Active Jobs screen.
2. Press Enter.

   The End-Of-Job Handling window opens displaying the current definitions.

   You can modify event and action definitions in the same way as described in the section End-Of-Job Checking and Actions.

   **Note:**
   Any modifications made to end-of-job handling parameters of an active job are valid for the current job run only.

# Maintaining Resources for Active Jobs

You can also modify resources for the current run of an active job without changing the original resource specification on the master database for future job runs.

**To do so:**

1. Type **L** in the the line command input field of the selected job on the Active Jobs screen.
2. Press Enter.

   A window opens with a list of resources in the same format as for the original resource specification.

   You can modify the resources for the active job in the same way as described in the subsection Defining Prerequisite Resources in the section Job Maintenance.

   This command can be useful if different job runs require different amounts of a specific resource, for example paper or tape drives.

 Copyright © Software AG 2003

# Modifying Scheduling Parameters

You can modify the scheduling parameters for a specific job run without changing the originally defined job schedule table

**To do so:**

1. Type **A** in the line command input field of the selected job on the Active Jobs screen.
2. Press Enter.

   The Schedule Definition window opens displaying the current schedule values in the same format as defined for the job on the master data base.

   You can modify the schedule in the same way as described in the subsection Scheduling a Job in the section Job Maintenance.

# Cancel, Hold and Release Active Jobs

This subsection covers the following topics:

- Operating System Jobs Handling
- Cancelling Active Jobs
- Holding Active Jobs
- Releasing Active Jobs

## Operating System Jobs Handling

Operating system jobs in the Entire Operations active data base can be handled directly from the Active Jobs screen in Entire Operations.

When Entire Operations submits jobs to the operating system, they are assigned a job number which appears on the Active Jobs screen. In MVS and MVS/XA systems, Entire Operations can issue JES operator commands automatically via line commands.

**Note:**
In BS2000/OSD, console commands are issued.

## Cancelling Active Jobs

**To cancel an active job from the operating system**

1. Enter **C** in the line command input field of the appropriate job on the Active Jobs screen.
2. Press Enter.
3. A window opens in which you can confirm cancellation:

```
 15.10.01              *** Entire Operations 4.1.1 ***              15:07:48
 Owner  SN                       Active Jobs               Network DEMO-NET
 Selection AW________                                   Run from 247__ to 247__
-------------------------------------------------------------------------------
 C   Job          Run Typ JobId Node Date  Time  Message
     *---------
 _   MESSAGE      247 DUM        148 11.02 15:04 Dummy Job terminated
 c   JOB1         247 JOB  5459  148 11.02 15:05 Job 5459 waiting in Spool Inpu
 _   JOB2         247 DUM        148 11.02 15:04 PAPER-READY - 247  - RUN not f
 _   JOB4      +-----------------------------------------------+DYN01 not found
 _   RECOVER   !                                               ! 247  - RUN not
 _   JOB3      !  Please confirm                               ! - RUN not found
 _             !  the Cancelling of JOB1                       !
 _             !  by entering 'Y' ===> _                       !
 _             !                                               !
 _             !  PF3 End                                      !
 _             +-----------------------------------------------+
 ******************************** Bottom of Data ********************************
 A Sched.Parms C Cancel D Deact E Edit G Gen.JCL H Hold I Input Cond L Resource
 M Modify O EOJ P Prose R Resubmit S Sysout U Release W Waiting for
 Command => ____________________________________________________________
Enter-PF1---PF2---PF3---PF4---PF5---PF6---PF7---PF8---PF9---PF10--PF11--PF12---
      Help  Add   End   ACond Save        Up    Down  ATask Left  Right Menu
```

 Copyright © Software AG 2003

A cancelled job cannot be released for further processing.

# Holding Active Jobs

**To stop a job (put it in HOLD status)**

1. Enter **H** in the line command input field of the appropriate job on the Active Jobs screen.
2. Press Enter.

   The message ==> H-Cmd executed <== appears in the Message column for the job.

3. Press Enter again.

   The message Job set to Hold appears in the Message column for the job.

   Command only has effect if job is not yet submitted.

# Releasing Active Jobs

**To release a job from HOLD status and allow it to continue**

1. Enter **U** in the line command input field of the appropriate job on the Active Jobs screen.
2. Press Enter.

   The message ==> U-Cmd executed <== appears in the Message column for the job.

3. Press Enter again.

   The message Job released from Hold appears in the Message column.

   **Note:**
   To be able to use the RELEASE (U) and CANCEL (C) line commands in BS2000/OSD, the active and passive Entire System Server console server must be available (see the Entire System Server User's Guide). If the execution node of the job is 148, the BS2000 online user ID must be the same as the user ID on the node where the console servers are running.

# Browsing through Active Job Sysout

This subsection covers the following topics:

- Displaying the Job Sysout
- OS/390 Sysout Special Commands
- VSE/ESA Sysout Special Commands

## Displaying the Job Sysout

You can view the sysout of an active job.

### Sysout Availability

| Operating System | Sysout Availability |
|---|---|
| OS/390 | The sysout can be browsed immediately **after job submission**. It is readable until the current last line readable from the spooling system (for example, JES2). |
| BS2000 / OSD | The sysout file can be browsed **only after job termination**. This is because the sysout file is open during execution and cannot be read. |
| UNIX/Windows | The sysout file can be browsed immediately **after job submission**. It is readable up to its current last line. |

**To display the job sysout:**

1. Type **S** in the line command field of the selected job.
2. Press Enter.

   If the job has been resubmitted or rescheduled several times, several job IDs can exist for the selected job. If this is the case, a window opens with a list of job IDs in the following format:

 Copyright © Software AG 2003

```
 15.10.01               *** Entire Operations 4.1.1 ***               12:28:15
 Owner  SN                        Active Jobs                Network DEMO-NET
 Selection WAE_______                                     Run from 167__ to 167__
-----------------------------------------------------+------------------------+---
 C   Job          Run Typ JobId Node Date  Time   !                        !
     *---------                                    !  Owner    SN           !
 _   MESSAGE      167 DUM        148 11.10 09:15  !  Network  DEMO-NET     !
 S   JOB1         167 JOB  4705  148 11.10 09:16  !  Job      JOB1         !
 _   JOB2         167 DUM        148 11.10 11:00  !  Run      167          !cee
 _   JOB4         167 MAC        148 10.10 23:55  !                        !nd
 _   RECOVER      167 JOB        148 11.10 00:00  !   Select a Job Id:     !ot
 _   JOB3         167 JOB        148 11.10 11:00  !                        !cee
 _                                                !  Current:   X  4727    !
 _                                                !  Previous:  _  4705    !
 _                                                !             _          !
 _                                                !             _          !
 _                                                !             _          !
 ******************************** Bottom of Data * !             _          !***
 A Sched.Parms C Cancel D Deact E Edit G Gen.JCL  !                        !rce
 M Modify O EOJ P Prose R Resubmit S Sysout U Rel !  PF3 End               !
 Command => ___________________________________________+------------------------+
Enter-PF1---PF2---PF3---PF4---PF5---PF6---PF7---PF8---PF9---PF10--PF11--PF12---
      Help  Add   End   ACond Save        Up    Down  ATask Left  Right Menu
```

The top half of the window identifies the job by owner, job network, job name and run number, the bottom half contains a list of job IDs; the job ID assigned for the current run is at the top, followed by previous runs.

3. Mark the job ID of the run for which you wish to see the sysout with any character.
4. Press Enter.

   If only one job sysout exists for the selected job, this window is bypassed and the sysout is displayed immediately.

   In browse mode, the job sysout is presented in Editor format and you can use Editor PF keys and browse commands:

```
 Job SNCOL80 (6181) Type SM File 1---------------------------- Columns 001 072
 ====>                                                         SCROLL===> CSR
 ***** ****************************** top of data ******************************
 00001 1                       J E S 2  J O B  L O G  --  S Y S T E M  D A E F
 00002 --------- JOB 6181  IEF097I SNCOL80  - USER SN       ASSIGNED
 00003  15.57.21 JOB 6181  $HASP373 SNCOL80  STARTED - INIT  3 - CLASS K - SYS
 00004  15.57.21 JOB 6181  IEF403I SNCOL80 - STARTED - TIME=15.57.21
 00005  15.57.21 JOB 6181  IEF404I SNCOL80 - ENDED - TIME=15.57.21
 00006  15.57.21 JOB 6181  $HASP395 SNCOL80  ENDED
 00007 0------ JES2 JOB STATISTICS ------
 00008 -    21 SEP 91 JOB EXECUTION DATE
 00009 -           22 CARDS READ
 00010 -           44 SYSOUT PRINT RECORDS
 00011 -            0 SYSOUT PUNCH RECORDS
 00012 -            2 SYSOUT SPOOL KBYTES
 00013 -         0.00 MINUTES EXECUTION TIME
 ***** **************************** bottom of data ****************************




Enter-PF1---PF2---PF3---PF4---PF5---PF6---PF7---PF8---PF9---PF10--PF11--PF12---
      Help        End   Quit  Rfind       Up    Down        Left  Right Curso
```

**Notes:**

1. **Name of sysout file**
   In BS2000/OSD, UNIX and Windows the sysout collection file name appears in the upper left-hand corner of the screen.
2. **Automatic Logon to the operating system server**
   Before a sysout file is displayed, Entire Operations checks to see whether the user is allowed to access the sysout file.
   If necessary, an automatic logon is carried out with the user ID, which is entered for the user as a standard user ID for the operating system server (see Entire Operations Administration Documentation).
   If this automatic logon does not function, for BS2000 files a further attempt will be made with the BS2000 user ID from the fully qualified file name.
   If this was successful, the current user ID is set accordingly for the operating system node.
   If the user **does not** (implicitly or explicitly) log on to the operating system server with the required access rights, via which the sysout is to be accessed, then the sysout cannot be displayed.
3. **Unix and Windows: Line length**
   Lines longer than 250 characters will be abbreviated in the Sysout display.
   They will be marked with >>> in the columns 247 250 of the display.

# OS/390 Sysout Special Commands

In addition to the standard Editor browse commands, the following special commands are available to display selected sysout files:

 Copyright © Software AG 2003

| Command | Description |
|---|---|
| [FILE] X | Display sysout file number X (e.g. FILE 4). |
| [FILE] name | Display sysout file with name **name** (e.g. FILE SO). |
| [FILE] name X | Select sysout file by number and name (e.g. FILE SO 4). |
| LINE 2 | Split all lines too long for display into 2 lines. Return to normal display with unqualified LINE command. |
| NEXT | Display next sysout file. |
| PREV | Display previous sysout file. |

Square brackets [ ] around the command keyword FILE denote that the keyword is optional.

The following sysout file names are available for the FILE commands:

| File Name | Description |
|---|---|
| CC | Summary of job steps and condition codes. |
| JL | JCL of selected job. |
| SI | SYSIN data. |
| SM | System messages. |
| SO | Sysout data. |

# VSE/ESA Sysout Special Commands

In addition to the standard Editor browse commands, the following special commands are available to display selected sysout files:

| Command | Description |
|---|---|
| [FILE] name | Display sysout file with name **name** (e.g. FILE LIST). |
| NEXT | Display next sysout file. |
| PREV | Display previous sysout file. |

Square brackets [ ] around the command keyword FILE denote that the keyword is optional.

The following sysout file names are available for the FILE commands:

| File Name | Description |
|---|---|
| CC | Summary of job steps and condition codes. |
| LST | List queue. |
| PUN | Punch queue. |
| RDR | Reader queue. |
| XMT | Transmit queue. |

# Resubmitting an Active Job

After a job has terminated, you can modify and resubmit it while it is still in the active data base. This function is useful after a job has failed.

For example, if a JCL error has occurred, you can modify the active JCL (see the subsection Editing Active JCL) and resubmit the job. The resubmitted job uses the old input conditions for submission, but can set different output conditions, depending on end-of-job analysis.

Any output conditions set by the job's first run can be reset by the second run if this feature is defined in the job's original end-of-job handling.

**To resubmit an active job**

1. Type **R** in the line command field of the selected job on the Active Jobs screen.
2. Press Enter.
3. A window opens in which you can confirm the re-submission by entering **Y** (yes).
4. Press Enter to confirm the re-submission.
5. The window closes and the re-submission time with the message Job is resubmitted appears in the message field of the Active Jobs screen.

 Copyright © Software AG 2003

# Resubmitting Sub-networks

The line command **R** may also be applied to jobs of the NET type (sub-networks).
However, this is only allowed, if the sub-network has not started yet.

# No Re-loading after Editing

In case of a **resubmission of the active job** (see Resubmitting an Active Job above), the pre-generated JCL is not reloaded, if the active JCL of the job has been edited in the meantime.

 Copyright © Software AG 2003

# Regeneration or Generation of Active JCL

The JCL for operating system jobs is generated (copied to the active data base) when Entire Operations activates a job network. Entire Operations allows you to regenerate the JCL while the job is in the active data base. This is useful when you wish to refresh the variables in dynamically generated JCL in MAC-type jobs or when you wish to (re-)submit active jobs with their original JCL after editing their JCL for a specific job run.

Even if pregenerated JCL exists, this command regenerates the active JCL from the master JCL. Symbol values are taken in their current status from the active symbol table. If necessary, the active symbol table should be checked beforehand.

The (re-)generation of active JCL is always being performed online, i.e., not by the NOP Monitor.
This also applies to MAC-type jobs.

**To regenerate JCL**

1. Type **G** in the line command field of the selected job on the Active Jobs screen.
2. Press Enter.
3. A window opens in which you can confirm regeneration by entering **Y** (yes).
4. Press Enter to confirm the regeneration and close the window.
5. The message JCL regenerated for job appears in the message field of the selected job on the Active Jobs screen.

# Resubmit Job after Re-generation of JCL

This subsection covers the following topics:

- Resubmitting the Active Job
- Symbol Prompting on Regeneration of JCL

---

## Resubmitting the Active Job

After re-generation of the JCL, the active job is **not** automatically restarted.

To resubmit the active job after a re-generation of the JCL, the line command **R** (Resubmit active job) must be entered (see Resubmitting an Active Job).

## Symbol Prompting on Regeneration of JCL

If symbol entry is defined for at least one symbol of the symbol table of the job, the symbol is prompted now. If symbol entry is cancelled, the JCL is not regenerated.

See also the subsection Symbol Prompting in the section Symbols.

 Copyright © Software AG 2003

# Re-generation of JCL for Sub-networks

The application of the line command **G** on a job of the NET type causes the (re-) activation of the sub-network to occur. However, it **does not** have the automatic start of the sub-network as a consequence.
The sub-network will receive a **new run number** because of this action.

**To start the sub-network after re-generation of the JCL**

- the line command **R** (Resubmit active job) must be entered (see Resubmitting Sub-networks).

# Active Jobs Online Documentation

You can display the text description of a job by typing **P** in the line command field of the selected job on the Active Jobs screen.

This description, if it exists, was written using the Entire Operations Editor during the original job definition. The description is displayed in Editor format and you can use Editor commands and PF keys to browse the text. No modification is possible. All text descriptions can only be modified on the master data base by selecting the Job Maintenance option of the Main Menu.

 Copyright © Software AG 2003

# Displaying Prerequisites for Active Job

This subsection covers the following topics:

- Full List of Pending Prerequisites
- Line Commands

---

## Full List of Pending Prerequisites

The message field on the Active Jobs screen shows only one pending prerequisite for which the job is waiting. For a full list of pending prerequisites to job submission (conditions, resources, scheduled times etc.), type **W** in the line command field of the selected job and press Enter.

A window opens with a list of events for which the active job is waiting:

```
01.11.01               *** Entire Operations 4.1.1 ***              14:44:20
 Owner  EXAMPLE                   Active Jobs               Network E60-FLOW
 Selection A________                                     Run from 4786_ to 4786_
- +-------------------------------------------------------------------------+
  !                                                                         !
  !  Job JOB-02     Run  4786      01.11.01 14:44        Network E60-FLOW    !
  !  is waiting for the following Prerequisites:                            !
  !                                                                         !
  !  _ Job is in passive wait since 29.02 14:43                             !
  !  _ E60-J015-O - 4786  - RUN not found                                    !
  !  _ E60-J019-O - 4786  - RUN not found                                    !
  !  _                                                                       !
  !  _                                                                       !
  !  _                                                                       !
  !  _                                                                       !
  !  _                                                                       !
  !  _                                                                       !
  !  R Reset Condition  S Set Condition  W Where Used                        !
  !  C Force Prerequisite Check                                              !
  !  ---PF1--------------PF3--------------------PF7---PF8------------------  !
  !     Help             End                    Up    Down                  !
  +-------------------------------------------------------------------------+
```

The listed message means that the current run of the job (run number 4786) is waiting for the following:

- the setting of the input condition E60-J015-0 from the same run. See the section Messages and Codes for a full list of possible messages and their meaning.
- the setting of the input condition E60-J019-0 from the same run. See the section Messages and Codes for a full list of possible messages and their meaning.

The text 'Job is in passive wait since 29.02 14:43' shows that the job has been in a passive wait for input conditions.

In this case, the job is automatically returned to the active wait by setting one of the input conditions, i.e., the monitor will execute a prerequisite check.

Before this message, you can **force** an active prerequisite check using the line command **C** (see Line Commands: Display Prerequisites for an Active Job)

For a complete list of possible news and their meaning, see the section Messages and Codes.

# Line Commands

| Command | Description |
|---|---|
| C | Only before the message "Job is in passive wait since ...":<br>Force an active prerequisite check. |
| R | • If used for a **condition** wait: **reset** condition to FALSE.<br>• If used for a **resource** wait: **delete** the active prerequisite resource definition. The active job will then no longer wait for the resource. |
| S | If used for a **condition** wait: **set** condition to TRUE. |
| W | • If used for a **condition** wait: **display** the usage of the active condition. For further information, see Display Use of Active Conditions.<br>• If used for a **resource** wait: **display** the usage of the resource. For further information, see Display Use of Resources. |

If the prerequisite is an input condition, you can set or reset the condition manually by typing **S** or **R** in the line command input field of the selected condition.

- Use the line command **S** to set the condition to TRUE;
- Use the line command **R** to reset the condition to FALSE.

In either case, a window opens in which you can confirm the manual (re-)setting by entering the condition name. Type in the condition name and press Enter to confirm the operation and close the window.

 Copyright © Software AG 2003

# Display Use of an Input Condition

**To invoke this function**

- Enter the line command **W** (see Line Commands: Display Prerequisites for an Active Job) for an input condition in Displaying Prerequisites for Active Job.

```
01.11.01                *** Entire Operations 4.1.1 ***                14:51:41
 Owner EXAMPLE             Input Conditions Maintenance            Job JOB-012
 Network E60-FLOW                                    Lauf 4745  Datum 01.11.01
-------------------------------------------------------------------------------
 +-----------------------------------------------------------------------------+
 !                                                                             !
 !  Owner   EXAMPLE                       Condition E60-JOB1-O                 !
 !  Network E60-FLOW                      Ref.type  RUN                        !
 !                                                                             !
 !  Output Condition of                    Input Condition for                 !
 !  -----------------------------------+------------------------------------ !
 !  Owner Network    Job            Run ! Owner Network    Job            Run !
 !        E60-FLOW   JOB-01        4745 !       E60-FLOW   JOB-012       4745 !
 !        E60-FLOW   JOB-02        4745 !       E60-FLOW   JOB-019       4745 !
 !                                      !                                      !
 !                                      !                                      !
 !                                      !                                      !
 !                                                                             !
 !  ---PF1---PF2---PF3---PF4---PF5---PF6---PF7---PF8---PF9---PF10------------ !
 !                 End                      Up    Down                        !
 +-----------------------------------------------------------------------------+
Enter-PF1---PF2---PF3---PF4---PF5---PF6---PF7---PF8---PF9---PF10--PF11--PF12---
      Help  Add   End   ACond Save        Up    Down                    Menu
```

The left column of the window displays the jobs which can generate the condition.
The right column of the window displays the jobs which use this condition as an input condition.

# Display Use of Resources

**To invoke this function**

- Enter the line command **W** (see Line Commands: Display Prerequisites for an Active Job) for a resource in Displaying Prerequisites for Active Job.

  The window displays a list of active jobs which are currently using partial quantities of the resource, for which you are waiting for.

```
04.10.01               *** Entire Operations 4.1.1 ***               11:42:48
                                Resource Usage
 ---------------------------------------------------------------------------
 Resource E52-PARALLEL         Type R                        Quantity
                                                     initial     2.00
 used by                                           total used     2.00
 Owner      Network    Run   Job        Begin
 EAMPLE     E52-LOGRES 159   E52-J21    04.10.01 11:40          1.00
 EAMPLE     E52-LOGRES 159   E52-J22    04.10.01 11:40          1.00









 ****************************** Bottom of Data ******************************

Enter-PF1---PF2---PF3---PF4---PF5---PF6---PF7---PF8---PF9---PF10--PF11--PF12---
      Help        End                     Up    Down
```

 Copyright © Software AG 2003

# Editing Active JCL

For the current job run, you can edit the active JCL of an active job.

**To do so**

1. Type **E** in the line command input field of the selected job on the Active Jobs screen.
2. Press Enter.

   The selected JCL is displayed in Editor format and you can edit it using Editor commands and PF keys, even if the JCL was written with a different editor.

   **Note:**
   Any changes to JCL made from the Active Jobs screen affect the current job run only.

   If you modify active JCL before the job is submitted, Entire Operations submits the job automatically according to its defined prerequisites.

   If you modified the JCL after the job terminated and want to resubmit the job with the new JCL, issue the **R** line command for the job on the Active Jobs screen (see the subsection Resubmitting an Active Job).

   Editing active JCL is useful for correcting JCL errors after job failure etc.

   Editing active JCL only refers to one run. If you want to edit the JCL for all runs, you must edit the master JCL.

# Calling Job Information

This function can be used for active jobs only, which are part of an active **subnetwork**.

**To call job information:**

- Enter the line command **Y** (see Line Commands: Show the calling Job) for a resource in the description of the Active Jobs Screen.

The following window opens:

```
+-------------------------------------------------------+
!                                                       !
!                  Calling Job Information              !
!                                                       !
!                  Owner      Network       Run Job     !
!  Sub-Network     SN         A-3          3348 BEGIN   !
!  called by       SN         SUB-1           7 J2      !
!                                                       !
! ----PF1----PF3--------------PF6------------------------ !
!     Help   End              Calling Network           !
+-------------------------------------------------------+
```

## Special PF Key

| PF Key | Name | Function |
|---|---|---|
| PF6 | Calling Network | Invokes the list of active jobs of the calling network. From there you can return to this window by pressing PF3. |

 Copyright © Software AG 2003

# Maintaining Active Conditions

Logical conditions are defined on the master data base when linking jobs within a job network. When a job network is activated, Entire Operations sets (activates) conditions automatically according to the occurrence of System events. Alternatively, you can set conditions manually. You can display and maintain active conditions.

This section covers the following topics:

- Invoking the Active Condition Maintenance Facility
- Adding Active Conditions
- Modifying Active Conditions
- Deleting Active Conditions
- Display Use of Active Conditions
- Mass Deletion of Active Conditions

---

## Invoking the Active Condition Maintenance Facility

- Column Headings: Active Conditions
- Special PF Keys: Active Conditions

**To invoke the Active Condition Maintenance facility**

- Press PF4 (ACond) from the Active Jobs screen.

  The Active Conditions screen appears:

```
17.11.01                *** Entire Operations 4.1.1 ***              11:21:02
 Owner SN                       Active Conditions
-------------------------------------------------------------------------------
 Cmd Owner      Network    Condition            Date     Time  Run   Status
     EXAMPLE*-- *--------- *------------------ -------- -----
  _  EXAMPLE    E10-PAR-01 E10-J01-OK           17.10.01 14:32    50 free
  _  EXAMPLE    E10-PAR-01 E10-J02-OK           17.10.01 14:38    50 in use
  _  EXAMPLE    E10-PAR-01 E10-J03A-OK          17.10.01 14:44    50 free
  _  EXAMPLE    E10-PAR-01 E10-J03C-OK          17.10.01 14:41    50 free
  _  EXAMPLE    E40-REC-01 E40-J01-OK           12.11.00 16:28  1439 free
  _  EXAMPLE    E40-REC-01 E40-J01-OK           12.11.00 16:28  1440 free
  _  EXAMPLE    E40-REC-01 E40-J01-OK           12.11.00 16:28  1441 free
  _  EXAMPLE    E60-FLOW   E60-JOB1-O           01.10.01 16:07  1968 free
  _  EXAMPLE    E60-FLOW   E60-JOB1-O           17.10.01 14:31  2022 free
  _  EXAMPLE    E60-FLOW   E60-JOB1-O           17.10.01 14:35  2023 free
  _  EXAMPLE    E60-FLOW   E60-JOB1-O           17.10.01 14:04  4743 free
  _  EXAMPLE    E60-FLOW   E60-J013-O           17.10.01 14:44  2022 in use
  _  EXAMPLE    E60-FLOW   E60-J013-O           22.12.00 14:46  2023 free
 ********************************** m o r e **********************************
 D Delete   M Modify   W Where Used
 Command => ____________________________________________________________
Enter-PF1---PF2---PF3---PF4---PF5---PF6---PF7---PF8---PF9---PF10--PF11--PF12---
      Help  Add   End         Save  Delet Up    Down                    Menu
```

  This screen displays a list of all active conditions belonging to your owner.

  You can modify, add or delete active conditions.

## Column Headings: Active Conditions

The following table explains the column headings for the data listed on the Active Conditions screen:

| Column | Description | |
|---|---|---|
| Cmd | One-character line command input field. Possible line commands are: | |
| | **D** | Delete condition. See Deleting Active Conditions. |
| | **M** | Modify condition. See Modifying Active Conditions. |
| | **W** | Use the active condition. See Display Use of Active Conditions. |
| Owner | Owner name for the condition. The field directly beneath the column heading shows the prefix used to obtain the current ID. Use an asterisk * as a wildcard to enter selection criteria for owner. | |
| Network | Network name. The field directly beneath the column heading shows the prefix used to obtain the current ID. Use an asterisk * as a wildcard to enter selection criteria for network. | |
| Condition Name | Name of condition as defined on the master data base. The first line shows the prefix used to obtain the present list. Use an asterisk * as a wildcard to enter selection criteria for condition. A condition that can be used **across networks** is called a **global condition**. If you select a global condition (prefix +), it is assigned to the owner SYSDBA and the network SYSDBA:<br>● If you are adding a condition, Owner and Network names are changed to SYSDBA.<br>● If you are modifying a condition, the condition is expected under owner/network SYSDBA. | |
| Date / Time | The date and time on which this condition was set. Date and Time serve as search criteria for Entire Operations, if no run number is specified. You can enter a starting date and time for the list of active conditions. | |
| Run | Run number of job which set this condition. | |
| Status | Status of condition. Possible values: | |
| | **free** | Can be used by any job. |
| | **in use** | Can be used by jobs which do not require exclusive usage. |
| | **exclusive** | Currently in use by a job; not usable by other jobs. |
| | **destructive** | Currently in use by a job; not usable by other jobs. The condition will be deleted after job termination. |

You can scroll the list of active conditions using PF7 (Up) and PF8 (Down) and you can use the available line commands and PF keys to maintain active conditions as described below.

## Special PF Keys: Active Conditions

| Key | Name | Function |
|---|---|---|
| PF6 | Delete | Invoke the Mass Deletion of Active Conditions. |

 Copyright © Software AG 2003

# Adding Active Conditions

You can add active conditions to change the job flow by defining them for jobs before submission.

**To add an active condition**

1. Press PF2 (Add) from the Active Conditions screen.

   The Condition Addition window opens:

```
 27.09.02              *** Entire Operations 4.1.1 ***              16:35:48
 Owner TESTBED                 Active Conditions
-------------------------------------------------------------------------------
 Cmd Owner      Network    Condition            Date     Time  Run   Status
     TESTBED*-- *--------- *------------------ -------- -----
  _  TESTBED    NET +-------------------------------------------+ 10 frei
  _  TESTBED    NET !                                           ! 11 frei
  _  TESTBED    NET !         Condition Addition                ! 10 frei
  _  TESTBED    NET !                                           ! 11 frei
  _  TESTBED    NET !           Owner ==> TESTBED               ! 10 frei
  _  TESTBED    NET !         Network ==> __________            ! 11 frei
  _  TESTBED    NET !       Condition ==> ____________________  ! 10 frei
  _  TESTBED    NET !     Date / Time ==> ________ ________     ! 11 frei
  _  TESTBED    NET !      Run Number ==> _____                 ! 10 frei
  _  TESTBED    NET !    Special Type ==>                       ! 11 frei
  _  TESTBED    NET !                                           ! 10 frei
  _  TESTBED    NET !          Status ==> _                     ! 11 frei
  _  TESTBED    NET !                                           ! 10 frei
 ****************** !  Enter-PF1---PF2---PF3------PF5---------  ! *************
 D Delete   M Modif !        Help  Add   End      Save          !
 Command => _______ +-------------------------------------------+ ______
Enter-PF1---PF2---PF3---PF4---PF5---PF6---PF7---PF8---PF9---PF10--PF11--PF12---
      Help  Add   End         Save  Delet Up    Down                   Menu
```

   The input fields have the same meaning as the corresponding columns on the Active Conditions screen (see Column Headings: Active Conditions.)

2. Enter values for the input fields.
3. Press PF5 (Save) to add the active condition.
4. Press PF3 (End) to close the Condition Addition window and return to the Active Conditions screen.

# Modifying Active Conditions

You can modify active conditions to change the use made of them by future runs of jobs for which they are defined.

**To modify an existing condition**

1. Type **M** in the line command field of the selected condition on the Active Conditions screen.
2. Press Enter.

   The Condition Modification window opens.

   The input fields have the same meaning as the corresponding columns on the Active Conditions screen (see Column Headings: Active Conditions.

3. Change the values in the input fields.
4. Press PF5 (Save) to save modifications to the active condition.
5. Press PF3 (End) to close the Condition Modification window and return to the Active Conditions screen.

# Deleting Active Conditions

**To delete an existing active condition**

1. Type **D** in the line command field of the selected active condition on the Active Conditions screen.
2. Press Enter.
3. A window opens in which you can confirm deletion by entering **Y**.
4. Press Enter to delete the condition and return to the Active Conditions screen.

# Display Use of Active Conditions

This function may be invoked via

- the list of active conditions, using the line command **W**. For further information see Line Commands: Display Prerequisites for an Active Job).
- the list of prerequisites, for which an active job is waiting, using the line command **W**. For further information see Line Commands: Display Prerequisites for an Active Job).

This functions displays the job, which is using the active condition, or the job, which last used the condition.

If several jobs use the condition simultaneously, only one job will be displayed.
If the field **End** is blank, the condition is currently being used. Otherwise, it is not in use.

```
17.11.01               *** Entire Operations 4.1.1 ***              12:53:10
 Owner SN                      Active Conditions
-------------------------------------------------------------------------------
 Cmd Own +-------------------------------------------------------------------+
     EXA !                                                                   !
  _  EXA !                      Active Condition Usage                     !
  w  EXA !                                                                   !
  _  EXA !  Owner      EXAMPLE          used by Owner     EXAMPLE           !
  _  EXA !  Network    E10-PAR-01               Network   E10-PAR-01        !
  _  EXA !  Condition  E10-J02-OK               Run       50                !
  _  EXA !  Run        50                       Job       E10-J03C          !
  _  EXA !  Status     1 in use                 Begin     17.10.01 14:38:46 !
  _  EXA !                                      End                         !
  _  EXA !                                                                  !
  _  EXA !  ------PF1---------PF3-----------------------------------------  !
  _  EXA !        Help        End                                           !
  _  EXA +-------------------------------------------------------------------+
  _  EXAMPLE    E60-FLOW   E60-J013-O          17.10.01 14:46  2023 free
 ********************************** m o r e ********************************
 D Delete   M Modify   W Where Used
 Command => ____________________________________________________________
Enter-PF1---PF2---PF3---PF4---PF5---PF6---PF7---PF8---PF9---PF10--PF11--PF12---
      Help  Add   End         Save  Delet Up    Down                   Menu
```

 Copyright © Software AG 2003

# Mass Deletion of Active Conditions

This function allows the mass deletion of active Conditions. You may use several selection criteria for the active conditions to be deleted.

Please check carefully the side effects of a mass deletion, before you perform it.

This section covers the following topics:

- Invoking the Mass Deletion of Active Conditions
- Field Descriptions: Active Condition Deletion

---

## Invoking the Mass Deletion of Active Conditions

**To invoke the Active Condition Maintenance facility**

- Press PF6 (Delete) from the Active Conditions screen.

  The Active Condition Deletion window opens:

```
23.01.02                *** Entire Operations 4.1.1 ***                14:38:37
 Owner SN                      Active Conditions
-------------------------------------------------------------------------------
 Cmd Owner      Network    Condition            Date     Time  Run   Status
     SN*------- *--------- *------------------- -------- -----
  _  SN         BS2-EX-2   JOB-1-OK             27.08.02 16:20  1108 free
  _  SN         BS2-EX-2   JOB-1-OK             27.08.02 16:21  1109 free
  _  SN         BS2-EX-2   JOB-1-OK             27.08.02 16:21  1110 free
  _  SN   +-----------------------------------------+ 2 00:07  1111 free
  _  SN   !                                         ! 2 16:22  1108 free
  _  SN   !        Active Condition Deletion        ! 2 16:22  1109 free
  _  SN   !                                         ! 2 16:22  1110 free
  _  SN   !    Owner      ==> __________            ! 2 00:08  1111 free
  _  SN   !    Run from   ==> _______________       ! 2 16:23  1110 free
  _  SN   !        to     ==> _______________       ! 2 00:08  1111 free
  _  SN   !    Confirm?   ==> Y                     ! 2 08:12  1400 free
 ******** !                                         ! ************************
 D Delete !                                         !
 Command  !    Enter-PF1---PF3--------------------  ! ________________
Enter-PF1 !          Help  End                     ! F9---PF10--PF11--PF12---
      Hel +-----------------------------------------+                  Menu
```

  This screen displays a list of all active conditions belonging to your owner.

  You can modify, add or delete active conditions.

## Field Descriptions: Active Condition Deletion

The following table explains the fields on the Active Condition Deletion window:

| Field | Description |
|---|---|
| Owner | Owner of the conditions.<br>Wildcard may be used. |
| Network | Network the conditions.<br>Wildcard may be used. |
| Condition | Condition(s).<br>Wildcard may be used. |
| Run from | Start of run number interval to be deleted. |
| Run to | End of run number interval to be deleted. |
| Confirm | **Y** Prompt for each deletion.<br>**N** Perform deletions without prompting. |

 Copyright © Software AG 2003

# Calendar Maintenance

This section covers the following topics:


- Calendar Maintenance Overview
- Calendar Maintenance Facility
- Adding a Calendar
- Copying a Calendar
- Modifying a Calendar
- Deleting a Calendar
- Displaying a Calendar
- Listing Networks Using a Calendar

# Calendar Maintenance Overview

This section covers the following topics:

- About Calendars
- How Calendars Work
- Calendar Types
- Calendar Names

---

## About Calendars

In calendars, you can define **workdays** and **holidays**. They are the basis of schedules for job networks and jobs.

Calendars can be linked to schedules. If a schedule depends on a calendar, calendar-dependent definitions can be made in the schedule. If a schedule is not linked to a calendar, the schedule assumes that all days are workdays.

## User-defined and NOP Calendars

User-defined calendars are the basis of schedule tables for jobs and job networks. Entire Operations calendars include **workdays** and **holidays** (non-workdays).

Entire Operations does not activate any networks on a day defined as a holiday.

## How Calendars Work

For example, a job network is scheduled to run on every first day of a month and the schedule table is based on a calendar in which Saturdays and Sundays are defined as non-workdays:

If the first day of a month is a Saturday or Sunday, Entire Operations does not start the network on these days, but either delays activation until the next workday following the holidays or brings activation forward to the last workday previous to the holidays, depending on the schedule definition.

## Calendar Types

There are two types of calendars in Entire Operations:

- **System-wide calendars**
  System calendars can be modified by authorized users only.
- **Owner-specific calendars**
  When you define a calendar, it is automatically associated with your owner. You can modify only those calendars that belong to your owner.

You can specify a calendar belonging to your owner for a schedule table, but you can also select a system calendar.

## Calendar Names

A calendar can be **valid for several years**, so you are not forced to change the name of the calendar at the end of the year. Just define the calendar for the next year. For this reason, you should use calendar names independent of the year.

 Copyright © Software AG 2003

You must define a calendar **separately for each year** you want to use it. Networks cannot be started, if a calendar is missing for the year for which it is needed. To be notified about such cases activate the event Calendar undefined for year in Global Messages for Events . In the months November and December, the NOP Monitor writes warning messages to the log, if a calendar currently used is not defined for the next year.

# Calendar Maintenance Facility

- Invoking the Calendar Maintenance
- Column Headings
- Line Commands
- Special PF Keys

## Invoking the Calendar Maintenance

**To invoke the Calendar Maintenance facility**

- Select the Calendar Maintenance option from the Main Menu.

  The Calendar Maintenance screen appears with a list of calendars already defined:

```
 25.09.01              *** Entire Operations 4.1.1 ***              12:36:12
 Owner EXAMPLE                Calendar Maintenance
 ---------------------------------------------------------------------------
 Cmd  Owner       Calendar    Year  Description
                  *---------  ----
  _   EXAMPLE     EXAMPLECAL  1998
  _   EXAMPLE     EXAMPLECAL  1999
  _   EXAMPLE     EXAMPLECAL  2000
  _   EXAMPLE     EXAMPLECAL  2001
  _   EXAMPLE     EXAMPLECAL  2002
  _   EXAMPLE     EXAMPLECAL  2003
  _   EXAMPLE     EX321-CAL   1996
  _   EXAMPLE     EX321-CAL   1997
  _   EXAMPLE     EX321-CAL   1998
  _   EXAMPLE     EX321-CAL   1999
 ********************************** m o r e **********************************
 C Copy  D Delete  L List  M Modify  S Description  W Where used



 Command => ____________________________________________________________
Enter-PF1---PF2---PF3---PF4---PF5---PF6---PF7---PF8---PF9---PF10--PF11--PF12---
      Help  Add   End         Save        Up    Down                   Menu
```

  The list of calendars contains system-wide calendars and calendars belonging to your owner. Calendars belonging to other owners do not appear in this list.

  A Calendar is identified uniquely by its owner name and year.

## Column Headings

The following table explains the column headings for the data listed on the Calendar Maintenance screen:

 Copyright © Software AG 2003

| Column | Description |
|---|---|
| Cmd | One-character line command input field. For possible values, see Line Commands: Calendar Maintenance below. |
| Calendar | User-defined name of calendar. Use an asterisk * as a wildcard to enter selection criteria in the field preceded by an asterisk * directly below this column heading. For example, enter SYS* and press Enter to list only those calendars whose names begin with SYS. You can combine prefixes with years, for example: SYS* 2001. |
| Year | Year of the calendar. |
| Owner | Owner of calendar (SYSDBA or your owner). |
| Description | Short description. Use the line command S to add or modify a short description. |

# Line Commands

Use the following line commands to perform the described functions on any calendar listed on the Calendar Maintenance screen:

| Cmd | Description |
|---|---|
| C | Copy the selected calendar when defining a new one. |
| D | Delete the selected calendar. (If not specified for any schedule.) |
| L | Display the first six months of the selected calendar. Holidays appear as dots (.) or are **not** highlighted. Press PF8 (Down) to display the second half-year. You cannot modify the calendar with this line command. |
| M | Modify selected calendar. Only **owner-specific** calendars can be modified. |
| S | Opens a window to enter a calendar short description. |
| W | List networks for which this calendar is specified. |

# Special PF Keys

| Key | Name | Function |
|---|---|---|
| PF2 | Add | Add a calendar. |

You can perform several functions on Entire Operations calendars using line commands and PF keys.

The following subsections give a detailed description of the available functions.

# Adding a Calendar

This section covers the following topics:

- Calendar Definition Window
- Field Description
- Calendar Display-Modes
- Defining Workdays and Holidays

---

## Calendar Definition Window

**To add a calendar definition**

1. Press PF2 (Add) from the Calendar Maintenance screen.

   The Calendar Definition window opens:

```
 25.09.01              *** Entire Operations 4.1.1 ***              12:36:12
 Owner EXAMPLE                Calendar Maintenance
 ---------------------------------------------------------------------------
 Cmd  Owner       Calendar    Year  Description
                  *---------  ----
  _   EXAMPLE     EXAMPLECAL  1998
  _   EXAMPLE     EXAMPLECAL  1999
  _   EXAMPLE     EXAMPLECAL  2000
  _   EXAMPLE     EXAMPLECAL  2001
  _   EXAMPLE     E +-------------------------------------+
  _   EXAMPLE     E !                                     !
  _   EXAMPLE     E !        Calendar Definition          !
  _   EXAMPLE     E !                                     !
  _   EXAMPLE     E !         Owner ===> EXAMPLE          !
  _   EXAMPLE     E !      Calendar ===> __________       !
 ****************** !          Year ===> 2001             ! ******************
 C Copy  D Delete   !                                     ! used
                    !  PF3 End                            !
                    +-------------------------------------+

 Command => ____________________________________________________________
Enter-PF1---PF2---PF3---PF4---PF5---PF6---PF7---PF8---PF9---PF10--PF11--PF12---
      Help  Add   End         Save        Up    Down                   Menu
```

   In this window you can define the new calendar by name and year.
   It contains the current Owner name and current Year as default values.

   A Calendar is identified uniquely by its owner name and year.

## Field Description

Meaning of the input fields:

 Copyright © Software AG 2003

| Field | Description |
|---|---|
| Owner | Name of owner for whom the calendar is to be defined. |
| Calendar | Calendar name. |
| Year | Calendar year. |

2. Type the required values in the input fields.
3. Press Enter.

The Calendar Definition screen appears:

```
 25.09.01                *** Entire Operations 4.1.1 ***                13:09:24
 Owner EXAMPLE             Calendar EXAMPLEGHH Year 2001

                 January                February               March
 Monday        1  8 15 22 29            5 12 19 26             5 12 19 26
 Tuesday       2  9 16 23 30            6 13 20 27             6 13 20 27
 Wednesday     3 10 17 24 31            7 14 21 28             7 14 21 28
 Thursday      4 11 18 25            1  8 15 22             1  8 15 22 29
 Friday        5 12 19 26            2  9 16 23             2  9 16 23 30
 Saturday      6 13 20 27            3 10 17 24             3 10 17 24 31
 Sunday        7 14 21 28            4 11 18 25             4 11 18 25

                 April                  May                    June
 Monday          2  9 16 23 30          7 14 21 28             4 11 18 25
 Tuesday         3 10 17 24          1  8 15 22 29             5 12 19 26
 Wednesday       4 11 18 25          2  9 16 23 30             6 13 20 27
 Thursday        5 12 19 26          3 10 17 24 31             7 14 21 28
 Friday          6 13 20 27          4 11 18 25             1  8 15 22 29
 Saturday        7 14 21 28          5 12 19 26             2  9 16 23 30
 Sunday        1  8 15 22 29          6 13 20 27             3 10 17 24

Enter-PF1---PF2---PF3---PF4---PF5---PF6---PF7---PF8---PF9---PF10--PF11--PF12---
      Help        End   Wkdy              Up    Down
```

This screen displays the first six months of the specified calendar year.

**Note:**
The format of the calendar display depends on the value of the Calendar Display Mode parameter in the Entire Operations Default settings and may therefore differ slightly from the format illustrated above.

# Calendar Display-Modes

- For terminals which support highlighting or colors:
  - Holidays appear **not** highlighted.
  - Workdays appear highlighted.
- If neither color nor highlighting are available:
  - Holidays appear as dots (**.**).
  - Workdays appear as normal calendar dates.

# Defining Workdays and Holidays

- Step 1: Defining Weekly Holidays
- Step 2: Defining Special Holidays

Defining a new calendar consists of defining workdays and holidays (non-workdays). This is done in two steps:

1. The first step is to define the **weekly holidays**.
   These are the non-workdays in every week, such as weekends.
2. The second step is to define **special holidays** or personal vacations.

These steps are explained in the following subsections.

## Step 1: Defining Weekly Holidays

**To define weekly holidays (non-workdays)**

1. Press PF4 (Wkdy) from the Calendar Definition screen.

   A window opens with a list of weekdays:

```
25.09.01                *** Entire Operations 4.1.1 ***                13:09:24
Owner EXAMPLE             Calendar EXAMPLEGHH Year 2001
                                          +-----------------------+
                January                 F !                       !
Monday        1  8 15 22 29             5 !  Calendar EXAMPLEGHH  !  26
Tuesday       2  9 16 23 30             6 !      Year 2001        !  27
Wednesday     3 10 17 24 31             7 !                       !  28
Thursday      4 11 18 25           1    8 !  Please mark weekly   !  29
Friday        5 12 19 26           2    9 !  holidays:            !  30
Saturday      6 13 20 27           3   10 !                       !  31
Sunday        7 14 21 28           4   11 !   _  Monday           !
                                          !   _  Tuesday          !
                April                   M !   _  Wednesday        !
Monday          2  9 16 23 30           7 !   _  Thursday         !  25
Tuesday         3 10 17 24           1    8 !   _  Friday           !  26
Wednesday       4 11 18 25           2    9 !   _  Saturday         !  27
Thursday        5 12 19 26           3   10 !   _  Sunday           !  28
Friday          6 13 20 27           4   11 !                       !  29
Saturday        7 14 21 28           5   12 !   S Set  R Reset      !  30
Sunday        1  8 15 22 29           6   13 !   PF3 End             !
                                          +-----------------------+
Enter-PF1---PF2---PF3---PF4---PF5---PF6---PF7---PF8---PF9---PF10--PF11--PF12---
      Help        End   Wkdy              Up    Down
```

2. Mark the weekly holidays with an **S**. (To reset a marked weekly holiday to a workday, mark it with **R**.) Press Enter.

   The window closes and the selected holidays appear as dots (**.**) or are **not** highlighted.

   The following figure shows the result of marking Saturday and Sunday as weekly holidays:

 Copyright © Software AG 2003

```
25.09.01                *** Entire Operations 4.1.1 ***                13:19:55
Owner EXAMPLE             Calendar EXAMPLEGHH  Year 2001

                 July                  August                September
Monday           2  9 16 23 30         6 13 20 27            3 10 17 24
Tuesday          3 10 17 24 31         7 14 21 28            4 11 18 25
Wednesday        4 11 18 25         1  8 15 22 29            5 12 19 26
Thursday         5 12 19 26         2  9 16 23 30            6 13 20 27
Friday           6 13 20 27         3 10 17 24 31            7 14 21 28
Saturday         .  .  .  .         .  .  .  .            .  .  .  .  .
Sunday        .  .  .  .  .         .  .  .  .            .  .  .  .  .

                 October               November              December
Monday        1  8 15 22 29            5 12 19 26            3 10 17 24 31
Tuesday       2  9 16 23 30            6 13 20 27            4 11 18 25
Wednesday     3 10 17 24 31            7 14 21 28            5 12 19 26
Thursday      4 11 18 25           1  8 15 22 29            6 13 20 27
Friday        5 12 19 26           2  9 16 23 30            7 14 21 28
Saturday      .  .  .  .           .  .  .  .            .  .  .  .  .
Sunday        .  .  .  .           .  .  .  .            .  .  .  .  .

Enter-PF1---PF2---PF3---PF4---PF5---PF6---PF7---PF8---PF9---PF10--PF11--PF12---
      Help        End   Wkdy              Up    Down
```

## Step 2: Defining Special Holidays

The second step is to mark special holidays or personal vacations:

1. Simply type over the date(s) with any character and press Enter. Multiple selection in one input operation is possible.

   The marked holidays appear as dots (**.**) or are **not** highlighted.

2. To display the second six months of the year, press PF8 (Down)
3. Mark the date(s) as described above.

   Selection and deselection of specific holidays is done in ’toggle’ fashion: overtyping a workday makes it a holiday, and overtyping a holiday with any character makes it a workday.

4. Press PF3 (End) to return to the Calendar Maintenance screen.

   The newly defined calendar appears in the list.

   **Note:**
   A network schedule can override workdays marked on a calendar, because a network runs on a day specified in a calendar, only if this day is also specified in the schedule.

# Copying a Calendar

When defining a new calendar, use an existing calendar as a model for the new definition.

**To copy a calendar**

1. Type **C** in the line command input field of the calendar to be copied. Press Enter.

   A window opens with the name and year of the existing calendar.

2. Enter a new name in the input field labelled **to calendar** (you cannot modify the year). Press Enter.

   The Copy window closes and the new calendar appears in the list on the Calendar Maintenance screen.

3. You can use the **M** line command to modify the new calendar.

 Copyright © Software AG 2003

# Modifying a Calendar

Modifying a calendar consists of specifying or deleting holidays.

**To modify a calendar**

1. Type **M** in the line command input field of the selected calendar on the Calendar Maintenance screen. Press Enter.

   The Calendar Definition screen appears with current holidays marked as dots (**.**) or **not** highlighted.

   You can now modify the calendar in the same way as described in the subsection Adding a Calendar.

2. Press PF4 (Wkdy) and use the **S** command to select new weekly holidays.
3. Use the **R** command to reset existing weekly holidays to workdays.
4. Press Enter to close the weekly holiday window and mark the special holidays as described in Step 2.
5. Press PF3 (End) to return to the Calendar Maintenance screen.

# Deleting a Calendar

**To delete a calendar definition**

1. Type **D** in the line command input field of the selected calendar on the Calendar Maintenance screen. Press Enter.

   A window opens in which you can confirm deletion by entering the calendar name.

2. Enter the calendar name.
3. Press Enter to perform the deletion.

   You cannot delete a calendar if it is specified for at least one schedule. If you wish to delete a calendar which is still basis of a defined schedule, Entire Operations notifies you with a message, stating the network for which the calendar is specified. In this case, you cannot delete the calendar until you have either:

   - Deleted the network for which the calendar is specified, or:
   - Specified another calendar for the relevant network schedule table.

   You can delete only the calendars for which you have a permission to delete.

 Copyright © Software AG 2003

# Displaying a Calendar

This function displays the first six months of the calendar year.
You cannot modify the calendar with this line command.

**To display a calendar definition**

1. Type **L** in the line command input field for the selected calendar on the Calendar Maintenance screen. Press Enter.

   The first six months of the selected calendar appear in the same format as the Calendar Definition screen (see figure in Step 1).
   Defined holidays are not modifiable and appear as dots (**.**) or are **not** highlighted.

2. Press PF8 (Down) to display the second half-year.

   Scroll the years by using PF7 (Up) to display the calendar with the same name of the previous year, and PF8 (Down) to display the calendar with the same name of the following year.

3. If no more definitions are available at either end, Entire Operations prompts you to define a calendar with the same name of the appropriate year in the calendar definition window.
4. You can define the calendar in the normal way or press PF3 (End) to abort the function and return to the list of calendars.

# Listing Networks Using a Calendar

**To list job networks for which a calendar is specified**

1. Type **W** in the line command input field of the selected calendar on the Calendar Maintenance screen. Press Enter.

   A window opens which lists the calendar identifiers (name, owner) and associated networks:

2. Press PF3 (End) to close the window and return to the Calendar Maintenance screen.

 Copyright © Software AG 2003

# Calendar Short Description

This section covers the following topics:

- Calendar Short Description Window
- Field Description

## Calendar Short Description Window

**To add or modify a calendar short description**

- Enter the line command **S** for a calendar on the Calendar Maintenance screen.

  The Calendar Short Description window opens:

```
 04.01.02               *** Entire Operations 4.1.1 ***              11:09:06
 Owner SN                     Calendar Maintenance
 ---------------------------------------------------------------------------
 Cmd  Owner       Calendar    Year  Description
                  *---------  ----
  _   SN          CAL1        1999
 +-------------------------------------------------------------------------+
 !                                                                         !
 !                            Calendar Description                         !
 !                                                                         !
 !  Owner       ==> SN                                                     !
 !  Calendar    ==> DEMOCAL                                                !
 !  Description ==>                                                        !
 !  Demo calendar_____________________________________________________     !
 !                                                                         !
 ! Enter-PF1---PF2---PF3---PF4---PF5---PF6---PF7---PF8---PF9---PF10--PF11- ! **
 !                   End                                                   !
 +-------------------------------------------------------------------------+


 Command => ____________________________________________________________
Enter-PF1---PF2---PF3---PF4---PF5---PF6---PF7---PF8---PF9---PF10--PF11--PF12---
      Help  Add   End         Save        Up    Down                    Menu
```

  In this window you can enter a calendar short description.

## Field Description

Meaning of the input fields:

| Field | Description |
|---|---|
| Description | Calendar short description. It will be displayed in the calendar list. |

# Log Information

This section covers the following topics:

- Displaying Logged Information
- Output of Log Information

## Displaying Logged Information

- Field Descriptions: Log Display Selection
- Column Headings: System Log
- Browse Commands: System Log
- PF Keys: System Log
- User-defined Log

Entire Operations logs all important system events. Additionally, more detailed user-defined logs are available at the job level. These must be specified for the job in the job definition.

**To display all logged information**

1. Select the Log Information option from the Main Menu.

   The Log Display Selection screen appears:

```
20.11.01              *** Entire Operations 4.1.1 ***              13:03:08
                            Log Display Selection
--------------------------------------------------------------------------------


    Log Date ==> 20.11.01 Thru ==> 20.11.01    Max. Lines ==> _______
    Log Time ==> 00:00:00 Thru ==> 13:03:08


       Owner ==> __________                  * Select   Blank All

     Network ==> __________                  * Select   Blank All

         Run ==> 1____    Thru ==> 99999

         Job ==> __________                  * Select   Blank All


        User ==> ________                    * Select   Blank all

 Command => ____________________________________________________________
Enter-PF1---PF2---PF3---PF4---PF5---PF6---PF7---PF8---PF9---PF10--PF11--PF12---
      Help        End                                                   Menu
```

   You can specify the date range, owner, network, run number range, job name and user ID for which to display log information.

 Copyright © Software AG 2003

## Field Descriptions: Log Display Selection

Meaning of the input fields:

| Field | Description |
|---|---|
| Log Date ... Thru | Enter date range of log. Default is current date. |
| Log Time ... Thru | Enter time range of log. Default is from 00:00:00 to 23:59:59 in the format HH:MM:SS. |
| Maximum Lines | The maximum number of lines in the log display.<br>**Blank** (value 0) means: no limit.<br>A default value can be defined for each user (see the Entire Operations Administration Documentation). |
| Owner | Enter name of the owner whose log is to be displayed. Enter asterisk * and press Enter to select owner from a list. Leave blank to select log of all owners. |
| Network | Enter name of the network whose log is to be displayed. Enter asterisk * and press Enter to select network from a list. Leave blank to select log of all networks. |
| Run ... Thru | Enter run number range to be displayed. Can be used only if owner and network have been selected. Default: 1-9999 (all). |
| Job | Enter name of the job whose log is to be displayed. Enter asterisk * and press Enter to select job from a list. Leave blank to select log of all jobs. |
| User | Enter the user ID, for which the log is to be displayed. To display the log for the Monitor, enter the name of the Monitor task. Enter an asterisk * and press Enter to define a group of users. A selection window does not open. To select the log of all users, either leave this field empty or enter only an asterisk *. |

**Note:**
You can use **only one** of the following methods to display the log. Enter selection criteria:
**either** in the Owner/Network/Run/Job fields
**or** in the User field.

2. Enter the selection criteria for the desired log information. Press Enter.

   The System Log screen appears:

```
 ENTIRE OPERATIONS System Log ---------------------------------Columns 014 088
====>                                                   SCROLL====> PAGE
M User ID  Owner      Network    Job          Run  Date   Time   Message
  ************************* top of data ************************************
  TASK 1   EXAMPLE    E60-FLOW   JOB-02       992  18.11  13:23  E60-J019-O -
  GHH      SN                                      18.11  13:23  Logon User B
  GHH      SN                                      18.11  13:24  Logon User B
  GHH      SN                                      18.11  13:50  Logon User B
  GHH      SN                                      18.11  13:50  Logon User B
  GHH      SN                                      18.11  13:54  Logon User B
  GHH      SN                                      18.11  13:54  Logon User B
  GHH      SN         DEMO2                        18.11  13:58  Calendar DEM
  TASK 1   SN         SN-E01                       18.11  13:58  Curr.Sched.
  TASK 1   EXAMPLE    E40-REC-01 E40-J03      825  18.11  14:00  Latest Start
  TASK 1   EXAMPLE    E40-REC-01 E40-J99999   825  18.11  14:00  Latest Start
  GHH      SN                                      18.11  14:02  Logon User B
  GHH      SN                                      18.11  14:02  Logon User B
  TASK 1   SN         SN-2       HUGO         767  18.11  14:24  Latest Start
  TASK 1   SN         SN-2       HUGO-VSE     767  18.11  14:24  Latest Start
  TASK 1   SN         SN-2       HUGO-146     767  18.11  14:24  Latest Start
  ************************ bottom of data ************************************
Enter-PF1---PF2---PF3---PF4---PF5---PF6---PF7---PF8---PF9---PF10--PF11--PF12---
      Help        End   Refre Rfind       Up    Down        Left  Right Curso
```

The above screen is an example of a system log using the **display all** option for the current date (blank selection criteria).

## Column Headings: System Log

The following table explains the column headings for the data listed on the System Log screen:

| Column | Description |
|---|---|
| M | Overtype the asterisk * in this field with any character to display more specialized information as defined for the job by the user. For more information see the subsection User-defined Log. |
| Userid | User ID as defined in host TP environment. |
| Owner | Owner name in Entire Operations. |
| Job | Entire Operations job name. |
| Network | Name of the job network. |
| Run | Job run number. |
| Date | Date of log entry. |
| Time | Time of log entry. |
| Message | Message text. |

## Browse Commands: System Log

Use the following Editor commands to browse the Log:

 Copyright © Software AG 2003

| Command | Description |
|---|---|
| BOTTOM | Scroll down to the last Log message at bottom of list. |
| FIND | Find a string. FIND 'TASK 1', for example, finds the next occurrence of the string TASK 1. |
| LEFT | Scroll left in the list. LEFT 5, for example, scrolls 5 columns to the left. |
| RIGHT | Scroll right in the list. RIGHT 5, for example, scrolls 5 columns to the right. |
| TOP | Scroll up to the first Log message at the top of the list. |

## PF Keys: System Log

Use the following PF keys to browse the Log:

| Key | Name | Function |
|---|---|---|
| PF4 | Refre | Update the screen with the most recent Log messages at bottom of data. |
| PF5 | Rfind | Find the next occurrence of the string last entered with the FIND command. |
| PF7 | Up | Scroll list toward top of data. |
| PF8 | Down | Scroll list toward bottom of data. |
| PF10 | All | List all active jobs in Entire Operations. |
| PF11 | NxtAc | List next scheduled and manual network activations. |

## User-defined Log

An asterisk ***** in the **M** column of any job means that a more specialized **user-defined log** is available according to the specifications made in the original job definition (see the subsection User-defined Log).

**To display the user-defined log**

1. Type over the asterisk ***** in the **M** column of the selected job on the System Log screen with any character. Press Enter.

   The user-defined log appears.

   **Types of User-defined Log**

   Three types of user-defined log are possible:

   - **JCL log**
     If (in the Job Maintenance facility) you specified JCL logging, the JCL of the job run selected from the System Log screen is displayed in Editor format, browse mode (see User-defined Log); The JCL log source is dependent upon the operating system, in which the job has run. For a detailed description see the subsection User-defined Log.
   - **Sysout log**
     If you specified the job sysout to be logged after job termination, the sysout of the job run selected from the System Log screen is displayed in Editor format, browse mode;
   - **Operating system messages**
     If you specified operating system messages to be logged according to the criteria defined in the Job Maintenance facility, the messages of the job run selected from the System Log screen are displayed in Editor format, browse mode.
2. Press PF3 (End) to return to the system log.

# Output of Log Information

- Natural Program Call
- Parameters
- Example for a Call
- Example of an Output

Log data can be written to the Natural standard output for printing or for transfer to other programs.

The batch utility NOPLP01P serves this purpose. It must be executed in a Natural batch job. The system files of Entire Operations must be correctly assigned.

## Natural Program Call

```
LOGON SYSEOR
NOPLP01P <P-FROM> <P-TO> <P-LANGUAGE>
FIN
```

## Parameters

| Parameter | Format | Use |
|---|---|---|
| P-FROM | A14 | Start date (with time as an option)<br><br>**Formats:**<br>YYYYMMDD<br>YYYYMMDDHHIISS<br><br>If time is omitted, the start is at the beginning of the day. |
| P-TO | A14 | End date (with time as an option)<br><br>**Formats:**<br>YYYYMMDD<br>YYYYMMDDHHIISS<br><br>If time is omitted, the end is at the end of the day. |
| P-LANGUAGE | I04 | Language code (optional)<br><br>**1** English<br>**2** German<br><br>If this parameter is omitted, the language setting from the Entire Operations defaults will be used. |
| P-CHGJCL | A01 | **Y** = Print the changes of the active JCL.<br>In a batch report, the changes to the active JCL will be added.<br>**N** = Do not print the changes of the active JCL (default). |

## Example for a Call

```
LOGON SYSEOR
NOPLP01P 20011118 20011118120000 1 N
FIN
```

 Copyright © Software AG 2003

outputs all log data in English from 18/11/2001 00:00:00 to 18/11/2001 12:00:00, without changes to the active JCL.

## Example of an Output

| 1========== Entire Operations Log - 18.11.01 00:00:00 thru 18.11.01 12:00:00 ========== Page: 6 | | | | | | | | |
|---|---|---|---|---|---|---|---|---|
| Date | Time | User-ID | Owner | Network | Run | Job | Code | Message |
| 18.11.01 | 10:22:36 | TASK 1 | UKSJU | SCHEDDEP | | | 7715 | Network SCHEDDEP did not run on 31.10.01 |
| 18.11.01 | 10:22:36 | TASK 1 | UKSJU | SCHTEST98 | | | 7715 | Network SCHTEST98 did not run on 31.10.01 |
| 18.11.01 | 10:22:36 | TASK 1 | UKSJU | TESTEXP | | | 2710 | Calendar WORKDAYS undefined for 2001 |
| 18.11.01 | 10:22:36 | TASK 1 | USW | V-AT-VWLS | | | 2710 | Calendar K-USW undefined for 2001 |
| 18.11.01 | 10:22:36 | TASK 1 | | | | | 7065 | Schedules of 26 Networks extracted |
| 18.11.01 | 10:22:38 | TASK 1 | EXAMPLE | E01-CONTI | 526 | | 7370 | Symbol Table EX-ST-COMN activated |
| 18.11.01 | 10:22:38 | TASK 1 | EXAMPLE | E10-PAR-01 | 151 | | 7370 | Symbol Table EX-ST-COMN activated |
| 18.11.01 | 10:22:38 | TASK 1 | EXAMPLE | E60-FLOW | 4767 | | 7370 | Symbol Table EXAM-ST1 activated |
| 18.11.01 | 10:22:39 | TASK 1 | GFR | BS2000 | 714 | | 7370 | Symbol Table GFR-ST1 activated |
| 18.11.01 | 10:22:39 | TASK 1 | GFR | BS2000 | 714 | | 7725 | Awaiting Symbol Prompting |

| | | | | | | | | |
|---|---|---|---|---|---|---|---|---|
| 18.11.01 | 10:22:39 | TASK 1 | GFR | BS2000 | 714 | | 7725 | Message Sending: No Recipient defined |
| 18.11.01 | 10:22:39 | TASK 1 | GFR | BS2000 | 714 | | 2060 | Symbol Prompt Request sent to SYSDBA |
| 18.11.01 | 10:22:40 | TASK 1 | EXAMPLE | E01-CONTI | 526 | E01-J01 | 1990 | Time Frame Setting |
| 18.11.01 | 10:22:40 | TASK 1 | EXAMPLE | E01-CONTI | 526 | E01-J02 | 1990 | Time Frame Setting |
| 18.11.01 | 10:22:40 | TASK 1 | EXAMPLE | E01-CONTI | 526 | E01-J03 | 1990 | Time Frame Setting |
| 18.11.01 | 10:22:40 | TASK 1 | EXAMPLE | E01-CONTI | 526 | E01-J04 | 1990 | Time Frame Setting |
| 18.11.01 | 10:22:40 | TASK 1 | EXAMPLE | E01-CONTI | 526 | E01-J05 | 1990 | Time Frame Setting |
| 18.11.01 | 10:22:40 | TASK 1 | EXAMPLE | E01-CONTI | 526 | E01-J06 | 1990 | Time Frame Setting |
| 18.11.01 | 10:22:40 | TASK 1 | EXAMPLE | E01-CONTI | 526 | | 2110 | Network activated on 24.02 at 10:22 |

 Copyright © Software AG 2003

# Symbols

This section covers the following topics:

- General Overview
- Master Symbol Table Maintenance Function
- Symbol Prompting
- Symbol Functions
- Predefined Symbols

# General Overview

This section covers the following topics:

- Symbol Tables
- Symbol Table Search Hierarchy
- Reserved Symbol Table Names
- Global Symbols
- Predefined Symbols
- Symbol Replacement
- Master Symbol Table
- Active Symbol Table

---

## Symbol Tables

Symbol tables are used for parameter substitution in Dynamic JCL Generation.

Symbol tables consist of a list of variables and their current values that are read into the dynamically generated JCL of MAC-type and JOB-type jobs at job activation time. The symbol table referenced must be specified for the job at definition time or in the active queue for a single job run.

Symbol tables are associated with owners. Each owner can have several symbol tables. You can only maintain the symbol tables that belong to your owner.

Symbols can be defined manually within Entire Operations, or they can be generated by any program, which invokes a subprogram delivered with Entire Operations, to set, reset, or modify a symbol. The symbol table entries contain the format, prompting type, prompting text (optional), and the value of a symbol.

## Symbol Table Search Hierarchy

Symbols are searched for in the following order:

 Copyright © Software AG 2003

| Order | Symbol Table | Description |
|---|---|---|
| 1 | Active symbol table of job. | |
| 2 | Master symbol table of job. | |
| 3 | Active symbol table of the network. | |
| 4 | Master symbol table of the network. | |
| 5 | Active symbol table of the caller job. | Only if the active job is within a sub-network. |
| 6 | Active symbol table of the caller network. | Only if the active job is within a sub-network. |
| 7 | Master symbol table <owner> / A. | <owner> is the current owner of the active job.<br>The symbol table <owner> / A is searched even if there is no symbol table definition on the job level and / or network level. |
| 8 | Master symbol table SYSDBA / A. | The symbol table SYSDBA / A is searched even if there is no symbol table definition on the job level and / or network level. |

If a symbol cannot be found anywhere, either the Symbol Not Found global exit is called (if defined), which determines the further processing, or the job is set to error status.

Symbol tables are associated with owners. Each owner can have several symbol tables.
You can only maintain the symbol tables that belong to your owner.

Symbols can be defined manually within Entire Operations, or they can be generated by any program, which invokes a subprogram delivered with Entire Operations, to set, reset, or modify a symbol.
The symbol table entries contain the format, prompting type, prompting text (optional), and the value of a symbol.

# Reserved Symbol Table Names

The symbol table name with prefix =EOR= is reserved as Entire Operations-internal and the check for it is implemented starting with version 4.1.1. For the future, we advise to avoid this prefix in any EOR object being created even if not rejected now.

# Global Symbols

Global symbols are symbols defined for use spanning all jobs and networks. They are kept centrally in symbol table **A** of owner SYSDBA.

# Predefined Symbols

There are a number of predefined symbols. You can find a description of these in the section Predefined Symbols.

# Symbol Replacement

How symbols are replaced is described in the subsection Symbol Tables.

**Notes:**

- Starting with Entire Operations 4.1.1, a symbol replacement is always attempted, if one of the defined escape characters is found in a line. It is no longer necessary for a symbol table to be defined on the job or network level. Symbols can also be replaced via global symbol tables. Predefined symbols can be replaced without having to define a symbol table.
- If an escape character is detected and no symbol table is defined, the error message ‡no symbol table definedŸ will be issued.

# Master Symbol Table

There are **two** ways to display a **master** symbol table:

## Method 1

1. Select the Symbol Tables option from the Main Menu.
2. The Master Symbol Tables window opens.
3. Type **L** in the line command input field of the appropriate symbol table.
4. Press Enter.
5. The selected **master** symbol table appears.

## Method 2

1. From the Master Job Definition window, press PF7 (Symb).
2. The **master** symbol table for the job appears.

# Active Symbol Table

During job or job network activation, an **active copy** of each symbol table used is created. To display an **active** symbol table:

1. Press PF7 (Symb) from the Active Job Definition window.
2. The **active** symbol table for the job appears.

To identify an active symbol table uniquely, both the network name and run number are required.

Active symbols are maintained analogously to master symbols. Therefore, only the maintenance of master symbol tables and symbols is described in the following paragraphs.
Please note that all modifications of active symbols apply **to the current run only**.

 Copyright © Software AG 2003

# Master Symbol Table Maintenance

This section covers the following topics:


- Invoking Master Symbol Tables Screen
- Adding a Master Symbol
- Multiple Symbol Values
- Symbol Plausibility Check User Routine
- Display/Modify Master Symbol Table
- Adding a Symbol to a Symbol Table
- Copy Symbol within Symbol Table or to another Symbol Table
- Modify Symbol in Symbol Table
- Numeric Value Check
- Deleting a Symbol from a Symbol Table
- Recursive Symbol Replacement
- Symbol Replacement in Job Control - JCL
- Copying a Master Symbol Table
- Deleting a Master Symbol Table
- Listing Jobs Using a Symbol Table

# Invoking Master Symbol Tables Screen

This subsection covers the following topics:

- Invoking Master Symbol Tables Screen
- Column Headings
- Line Commands
- Special PF Keys

---

## Invoking the Master Symbol Tables Screen

**To invoke the Master Symbol Table Maintenance function**

1. Select the Symbol Tables option from the Main Menu.
2. Press Enter.

   The following window opens:

```
 20.11.01               *** Entire Operations 4.1.1 ***              10:27:18
 Owner EXAMPLE                      Main Menu                    User ID VMU
 ---------- +-------------------------------------------------+ --------------
            !                                                 !
      Main  !              Master Symbol Tables               !
            !                                                 !
   1  Netwo !       Cmd     Owner         Symbol Table         ! ment (V132)
   2  Activ !               EXAMPLE___    *_________           ! ement (V141)
   3  Calen !        _      EXAMPLE       ADMIN                !
   4  Log I !        _      EXAMPLE       EX-ST-COMN           !
   5  Symbo !        _      EXAMPLE       EX-VSE-1             !
   6  Syste !        _      EXAMPLE       EXAM-ST1             !
   7  Repor !        _      EXAMPLE       E20-ST               !
   8  Impor !        _      EXAMPLE       E40-ST               !
   9  Help  !        _      EXAMPLE       E53-ICSYM            !
            !        _      EXAMPLE       HAMBURG              !
            !        _      EXAMPLE       LONG-TABLE           !
            !        _      EXAMPLE       UKSJUTAB1            !
            !  C Copy D Delete L List Symbols W Where used     !
            !                                                 !
 Command => !  Enter-PF1--PF2--PF3----PF5----PF7--PF8--PF12-   ! _______
Enter-PF1-- !        Help Add  End    Save   Up   Down Menu    ! -PF11--PF12---
      Help  +-------------------------------------------------+  Owner Mail
```

   This window lists master symbol tables already defined to Entire Operations. You see only the symbol tables that belong to your owner. If no master symbol tables have been defined for your owner, the list is empty.

## Column Headings

Meaning of column headings:

 Copyright © Software AG 2003

| Column | Description |
|---|---|
| Cmd | One-character line command input field. For possible values see Line Commands: Master Symbol Tables - window below. |
| Owner | Owner of the symbol table. The selection field of this column denotes the owner for whom symbol tables are displayed in column Table Name. This field is preset with the owner under which you are currently working. You can enter any owner to which your user ID belongs. Enter an asterisk * and press Enter to display a selection list of owners. |
| Table Name | In the selection field of this column you can enter selection criteria for the symbol tables to be listed for the owner, above. For example, enter DE* and press Enter to list all symbol tables beginning with DE. This field appears at first with an asterisk * and displays all of the owner's symbol tables. |

# Line Commands

Use the following line commands to perform the described functions on any symbol table listed in the Master Symbol Tables window:

| Cmd | Description |
|---|---|
| C | Copy a master symbol table. |
| D | Delete a master symbol table. |
| L | List / Modify symbols in the selected table. |
| W | List jobs which use a symbol table. |

# Special PF Keys

You can perform the following function from the Master Symbol Tables window using PF2:

| Key | Name | Function |
|---|---|---|
| PF2 | Add | Add a master symbol table. |

The following subsections describe the functions you can perform on master symbol tables using available line commands and PF keys.

# Adding a Master Symbol

This subsection covers the following topics:

- Adding a Master Symbol
- Special PF Keys
- Field Descriptions
- Example

---

## Adding a Master Symbol

If this is the first symbol of a new symbol table, the table itself will be created implicitly by this action.

**To add a master symbol**

1. Press PF2 (Add) from the Master Symbol Tables window.

   The following window opens:

```
10.11.01                *** Entire Operations 4.1.1 ***                14:07:21
 Owner   REQUEST          Master Symbol Table P185905
 Network P185905                                                        Run
 +-------------------------------------------------------------+ ------------
 !                                                             !
 !                    Master Symbol Modification               ! 1.01 16:13
 !                                                             ! 1.01 16:30
 !  Symbol Table ===> P185905___              Owner REQUEST     ! 1.01 16:13
 !  Symbol  Name ===> SHORT1_______________  Network P185905    ! 1.01 17:15
 !        Format ===> A                        Run              ! 1.01 17:16
 !         Value ===> Short-value_______________________________ ! 1.01 17:17
 !                    ____________________________________________ ! 1.01 17:17
 ! Be careful with insertions or deletions.                    ! 1.01 17:17
 ! The 2 lines will be concatenated to one symbol value.       ! 1.01 17:16
 !     Prompting ===> A                    Update Mode ===> _    ! 1.01 17:16
 !   Prompt Text ===> ____________________________________________ ! 1.01 17:16
 !                    ____________________________________________ ! 1.01 17:16
 !                    ____________________________________________ ! 1.01 17:16
 !                    ____________________________________________ ! 1.01 17:16
 !                    ____________________________________________ ! ************
 ! Enter-PF1---PF2---PF3-----PF5----PF8----PF9---PF10---PF11--     !
 !       Help  Add   End     Save   RgChk  Mult  Copy   UsrRt     ! F11--PF12---
 +-------------------------------------------------------------+
```

2. Enter the name of a new master symbol table and define the first symbol for it. Input fields are described under Field Descriptions: Master Symbol Addition.

## Special PF Keys

You can perform the following functions from the Master Symbol Addition window using these PF keys:

 Copyright © Software AG 2003

| Key | Name | Function |
|---|---|---|
| PF8 | RgChk | Numeric value check<br>The value range check is only performed for values of format N. In this case, a special window appears here. |
| PF9 | Mult | Assign multiple values for one symbol. These can be used in subsequent replacements of the same symbol. A special window opens. |
| PF10 | Copy | Copy a complete master symbol table, even from the alternate EOR data file. (**Master Symbol Tables only**) |
| PF11 | UsrRt | Define and edit a plausibility check user routine for this symbol. (**Master Symbol Tables only**) |

# Field Descriptions

Meaning of the input fields:

| Field | Description | |
|---|---|---|
| Symbol Table | Enter the name of the new master symbol table. It contains the variables for Dynamic JCL Generation and can be maintained manually or modified by programs. | |
| Symbol Name | Enter the name of the symbol to be used as variable. | |
| Owner | Owner of symbol table. | |
| Network | Current job network (**Active** Symbol Table only). | |
| Format | Enter the format of the variable. Possible values: | |
| | **A** | Alphanumeric (including special characters) |
| | **D** | Date |
| | **H** | Alphanumeric; hidden<br>● The symbol value will not be visible in the Value field.<br>● In lists and logs, the symbol value will be displayed as ‡*** hidden ***Ÿ. |
| | **L** | Alphanumeric; conversion to lower case. |
| | **N** | Numeric. See Value for the numeric field format. |
| | **U** | Alphanumeric; conversion to upper case. |
| Run | Current job run (**Active** Symbol Table only). | |

| | | |
|---|---|---|
| Value | Enter the current value of the variable, i.e. the string or number to be substituted in dynamically generated JCL. | |
| | **Notes:**<br>● If the **Value** is longer than **40** characters, continue on the second line. Maximum length is **80** characters.<br>Be careful with insertions and deletions. The **2** lines are concatenated to one symbol value.<br>● The maximum length for a **numerical Value** is **N10.4** (10 digits before the decimal point and 4 digits after the decimal point).<br>A decimal point can appear at any position.<br>● A date must use the format YYYYMMDD.<br>● The value of a hidden symbol (format **H**) can be entered, but it will be invisible. | |
| Prompting | Specifies whether the user is to be prompted for this symbol during manual activation of the job network. Possible values: | |
| | **A** | Prompt for symbol at each activation. |
| | **E** | Prompt only if no value is specified in table. |
| | **N** | Never prompt for symbol. |
| Modification Mode | | |
| | **M** | Write back modified active symbol to the master table as well.<br><br>**Note:** The symbol is also written back, if a respective global setting is available. See Entire Operations Defaults in the section System Administrator Services of the Entire Operations Administration Documentation. |
| | **else** | No special action. |
| Prompt Text | Optional text to be displayed when symbol prompting is performed, to help the user specify the correct value. | |

3. If you wish to add more symbols to the new table, press PF2 (Add) from the Master Symbol Addition window. This saves the first definition and clears the window.

   You can now add another symbol. You can add any number of symbols to a master symbol table.

4. Press PF5 (Save) to save the new master symbol table.
5. Press PF3 (End) to close the window and return to the Master Symbol Tables window. The new master symbol table appears in the list.

   You can add any number of master symbol tables for your owner.

# Example

The following example illustrates the use of the symbol FILE-1 in the master symbol table DEMO:

 Copyright © Software AG 2003

```
10.11.01                *** Entire Operations 4.1.1 ***                14:17:27
 Owner   SN               Master Symbol Table DEMO
 Network                                                                Run
 +-------------------------------------------------------------------+ ------------
 !                                                                   !
 !                     Master Symbol Modification                    ! 1.01 14:12
 !                                                                   ! 1.01 14:12
 !  Symbol Table ===> DEMO______              Owner SN               ! 1.01 14:12
 !  Symbol  Name ===> FILE-1_______________  Network                 ! 1.01 14:13
 !        Format ===> A                         Run                  ! 1.01 14:13
 !         Value ===> EOR.DEMO.SRCE_____________________________     !
 !                    ________________________________________       !
 ! Be careful with insertions or deletions.                          !
 ! The 2 lines will be concatenated to one symbol value.             !
 !     Prompting ===> E                      Update Mode ===> _      !
 !   Prompt Text ===> The Entire Operations Demonstration_____       !
 !                    Source Library___________________________      !
 !                    ________________________________________       !
 !                    ________________________________________       !
 !                    ________________________________________       ! ************
 ! Enter-PF1---PF2---PF3-----PF5----PF8----PF9---PF10---PF11--        !
 !       Help  Add   End     Save   RgChk  Mult  Copy   UsrRt        ! F11--PF12---
 +-------------------------------------------------------------------+
```

For each occurrence of the symbol FILE-1 in the JCL of the job for which symbol table DEMO is specified, the value EOR.DEMO.SRCE is substituted. For example, the JCL line:

```
//XYZ  DD DSN=@FILE-1,DISP=SHR
```

as defined in the original JCL, becomes:

```
//XYZ  DD DSN=EOR.DEMO.SRCE,DISP=SHR
```

at job activation time.

> **Note:**
> Symbols preceded by the submission escape character in the JCL are replaced by their current values when the job is submitted.

The user can modify the resulting JCL for a single job run using the Active Job Maintenance facility (see the subsection Editing Active JCL in the section Active Job Networks).

When the job network which uses this symbol table is activated manually, the user is prompted for this symbol. The text in the Prompt Text field is displayed during symbol prompting to help the user specify the correct value. The user can leave the specified value or modify it for the network run.

# Multiple Symbol Values

This subsection covers the following topics:

- Defining Multiple Symbol Values
- Field Descriptions
- Symbol Replacement

## Defining Multiple Symbol Values

For special purposes, you can give a symbol several values which can be used in subsequent substitutions of the same symbol. These values can be used for the multiple parallel activation of a job. The number of parallel jobs is the same as the number of multiple values defined here.

**To define multiple symbol values**

- Press PF9 (Mult) from the Master Symbol Addition window.

  The Multiple Symbol Values window opens:

```
                                +---------------------------------------------+
11.11.01                 *** Ent !                                             !
Owner   SN                Master !           Multiple Symbol Values            !
Network                          !                                             !
----------------------------- !  Owner  ===> SN            Net               !
+---------------------------- !  Table  ===> EXAM-ST1      Run               !
!                             !  Symbol ===> JOBLIB                          !
!                     Master Sy !  ----------- Values   1 to  13 ----------   !
!                             !  EOR.DEV.LOAD_______________________________   !
!  Symbol Table ===> EXAM-ST1_ !  ___________________________________________   !
!  Symbol  Name ===> JOBLIB___ !  ___________________________________________   !
!        Format ===> A         !  ___________________________________________   !
!         Value ===> EOR.DEV.L !  ___________________________________________   !
!                    _________ !  ___________________________________________   !
!     Prompting ===> E         !  ___________________________________________   !
!   Prompt Text ===> _________ !  ___________________________________________   !
!                    _________ !  ___________________________________________   !
!                    _________ !  ___________________________________________   !
!                    _________ !  ___________________________________________   !
!                    _________ !  ___________________________________________   !
! Enter-PF1---PF2---PF3-----PF !  ___________________________________________   !
!       Help  Add   End     Sa ! Enter-PF1---PF3------PF5------PF7---PF8--    !
+---------------------------- !       Help  End      Save     Up    Down     !
     Help  Add   End         S +---------------------------------------------+
```

## Field Descriptions

Meaning of the input field:

| Field | Description |
|---|---|
| Values ... to ... | You can enter up to **60** values here. These values are used for subsequent substitutions. Scroll with PF7 (Up) and PF8 (Down). |

 Copyright © Software AG 2003

For further information on the assignment of multiple symbol values, see the subsection Symbol Replacement with Multiple Symbol Values.

# Symbol Replacement

You can use the symbol function MV to get single occurrences of multiple symbols for replacement. For further information, see the symbol function MV description.

# Symbol Plausibility Check User Routine

This subsection covers the following topics:

- Symbol Plausibility Check User Routine
- Field Descriptions
- Using Adabas and Entire System Server
- Special PF Keys

---

## Symbol Plausibility Check User Routine

A **plausibility check** can be performed on entered symbol values, during symbol modification or prompting.

The user routine must be written as a Natural subprogram and must use the supplied parameter list NOPXPL-A. This parameter list contains the owner, symbol table, symbol name, etc. It can therefore be used for different symbols.

### Special Parameters

The parameters P-RC (return code) and P-RT (return text) are examined by the caller after execution of the user routine. If P-RC is zero, the symbol is accepted as **ok**. Otherwise, the symbol is not accepted.

If the text from P-RT is not blank, it will be displayed to the user with message code EOR1855. If P-RT is not zero and blank, a standard error message is displayed.

**To define a symbol plausibility check user routine**

- Press PF11 (UsrRt) from the Master Symbol Addition / Modification window.

  The following window opens:

```
11.11.01                *** Entire Operations 4.1.1 ***                15:57:31
Owner   SN               Master Symbol Table EXAM-ST1
Network                                                                Run
-------------------------------------------------------------------------------
+-------------------------------------------------------------+
!                                                             !02.00 12:32
!                    Master Symbol Modification               !11.99 10:33
!                                                             !03.01 08:40
!  Symbo +-----------------------------------------------+    !05.99 17:26
!  Symbo !                                               !    !02.00 12:32
!        !  Definition of Symbol Check User Routine      !    !03.01 08:40
!        !                                               !___ !11.99 10:32
!        !  Owner         ===> SN                       !___ !02.01 12:31
!     Pr !  Symbol Table   ===> EXAM-ST1                 !    !
!   Prom !  Symbol        ===> JOBLIB                    !___ !
!        !                                               !___ !
!        !  Library       ===> ________                  !___ !
!        !  User Routine  ===> ________                  !___ !
!        !                                               !___ !
! Enter- !  ---PF1--PF3---PF4---PF5---------PF9----      !1--  !*************
!        !     Help End   Edit  Save        Delete       !Rt   !
+------- +-----------------------------------------------+------+PF11--PF12---
     Help  Add   End         Save        Up    Down        Print
```

 Copyright © Software AG 2003

# Field Descriptions

Meaning of the input fields:

| Field | Description |
|---|---|
| Library | Enter name of library in which user routine resides. |
| User Routine | Enter name of user routine. |

# Using Adabas and Entire System Server

As in other user routines, Adabas, Entire System Server and Natural system variables can provide a lot of flexibility to symbol checking.

# Special PF Keys

| Key | Name | Function |
|---|---|---|
| PF4 | Edit | Edit or create a user routine. **Do not forget to STOW the routine so it can be used**. |
| PF9 | Delete | Delete the user routine definition, but not the user routine itself. |

# Display/Modify Master Symbol Table

This subsection covers the following topics:

- Modify Existing Master Symbol Table
- Column Headings
- Special PF Keys

## Modify Existing Master Symbol Table

Modifying a master symbol table consists of adding, modifying or deleting symbols and their current values in an existing symbol table.

**To modify an existing master symbol table**

- Type **L** in the line command input field of the selected symbol table in the Master Symbol Tables window. Press Enter.

  The Master Symbol Table screen appears: (You can also display this screen by pressing PF7 (Symb) from the Master Job Definition window).

```
 11.11.01                *** Entire Operations 4.1.1 ***                15:59:08
 Owner   SN               Master Symbol Table EXAM-ST1
 Network                                                                Run
 ---------------------------------------------------------------------------
 C Symbol            F P Value                        modified by
 _ CLASS             A E G                            SN       05.02.00 12:32
 _ HUGO              A E HUGO                         SN       20.11.99 10:33
 _ JOBLIB            A E EOR.DEV.LOAD                 GHH      22.04.01 15:58
 _ JOBNAME           A E SNE6201                      SN       14.05.99 17:26
 _ MSGCLASS          A E X                            SN       05.02.00 12:32
 _ STEPLIB           A E EOR.DEV.LOAD                 SN       11.03.00 08:40
 _ TEST              A E TEST                         SN       20.11.99 10:32
 _ UID               A E SN                           SN       05.02.00 12:31
 _
 _
 _
 _
 _
 _
 ****************************** Bottom of Data ******************************
 C Copy   D Delete   M Modify
Enter-PF1---PF2---PF3---PF4---PF5---PF6---PF7---PF8---PF9---PF10--PF11--PF12---
      Help  Add   End         Save        Up    Down        Print
```

  This window lists the symbols defined for the table by name, format, prompt value and current symbol value. Information is provided on the right concerning the user and date and time when the symbol was last modified.

  You can add, modify and delete a symbol from the table.

 Copyright © Software AG 2003

# Column Headings

Meaning of the column headings:

| Column | Description | |
|---|---|---|
| C | One-character line command input field. Possible values: | |
| | **C** | Copy symbol. |
| | **D** | Delete symbol. |
| | **M** | Modify symbol. |
| Symbol Name | Name of the symbol used as variable. | |
| F | **Format** of the variable. Possible values: | |
| | **A** | Alphanumeric (including special characters) |
| | **D** | Date |
| | **L** | Alphanumeric; conversion to lower-case letters |
| | **N** | Numeric |
| | **U** | Alphanumeric; conversion to upper-case letters |
| P | **Prompting**. Is the user prompted for this symbol during manual activation of the job network? Possible values: | |
| | **A** | Prompted for symbol at each activation. |
| | **E** | Prompted only if no value is specified in table. |
| | **N** | Never prompted for symbol. |
| Value | Current value of the variable, i.e. the string or number substituted in dynamically generated JCL. | |
| | ***** empty ***** | Means the field is **blank**. |
| | ***** ... multiple values ***** | Means you must use the **M** line command to display the multiple values. |
| modified by | User who last modified the symbol followed by date and time of last modification. | |

# Special PF Keys

| Key | Name | Function |
|---|---|---|
| PF10 | Print | Print symbol table with all symbols on the printer assigned to PRINTER1.<br>**Exception for BS2000**: An additional window opens in which you are asked to enter the printer name. If you wish to print via FORMS, because RSO is not installed, enter the following in the field Print Device: F=formname. |

# Adding a Symbol to a Symbol Table

**To add a symbol to the table**

1. Press PF2 (Add) on the Master Symbol Table screen.

   The Master Symbol Addition window opens (see Adding a Master Symbol Table), with the name of the master symbol table already entered in the Symbol Table field. This field is not modifiable.

2. Enter the new symbol definition.
3. Press PF5 (Save) to save the new definition.
4. Press PF3 (End) to return to the Master Symbol Table screen.

 Copyright © Software AG 2003

# Copying a Symbol within a Symbol Table or to another Symbol Table

**To copy a symbol definition within a symbol table or to another Symbol Table**

1. Type **C** in the line command input field of the selected symbol on the Master Symbol Table screen.
2. Press Enter.

   The Symbol Copy window opens.

```
04.02.02                *** Entire Operations 4.1.1 ***                13:26:35
 Owner   SN               Master Symbol Table A1
 Network                                                              Run
 ---------------------------------------------------------------------------
 C Symbol +-------------------------------------------------+
   *----- !                                                 !
 c A2     !                    Symbol Copy                  !
 _ A5     !                                                 !
 _ M1     !   From Symbol ==> A2__________________          !
 _ SYC-01 !                                                 !
 _        !   Owner  ==> SN________   Network ==> __________ !
 _        !   Table  ==> A1________   Run     ==> _____      !
 _        !                                                 !
 _        ! ------------------------------------------------ !
 _        !   To   Symbol ==> ____________________          !
 _        !                                                 !
 _        !   Owner  ==> SN________   Network ==> __________ !
 _        !   Table  ==> A1________   Run     ==> _____      !
 _        !                                                 !
 ******** !  PF3 End                                        ! ****************
 C Copy   !                                                 !
Enter-PF1 +-------------------------------------------------+ 0--PF11--PF12---
      Help  Add   End   Copy  Save        Up    Down  Print Left  Right
```

   The upper half of the window shows the origin symbol.
   In the lower half of the window you must define the target symbol. With this function, you may copy to another symbol in the same table, or to a symbol in another symbol table.
   If you leave the window with PF3 without specifying a target symbol name, the copy will be aborted.

3. Enter the name of the symbol to copy **to** in the **To Symbol** field.
4. Press PF3 (End) to copy the symbol and return to the Master Symbol Table screen.

# Modifying Symbol in Symbol Table

**To modify a symbol definition**

1. Type **M** in the line command input field of the selected symbol on the Master Symbol Table screen. Press Enter.

   The Master Symbol Modification window opens in the same format as the Master Symbol Addition window (see Adding a Master Symbol Table). The window contains the current values and the Symbol Table and Symbol Name fields are not modifiable.

2. Enter your modifications.
3. Press PF5 (Save) to save the modified definition.
4. Press PF3 (End) to return to the Master Symbol Table screen.

 Copyright © Software AG 2003

# Numeric Value Check

**To carry out the numeric value check for a symbol of format N**

- Press PF8 (RgChk) on the Master Symbol Definition or Master Symbol screens.

  The following window appears:

```
 20.11.01              *** Entire Operations 4.1.1 ***              10:09:52
 Owner   EXAMPLE         Master Symbol Table ADMIN
 Network                                                             Run
 ---------------------------------------------------------------------------
 +-------------------------------------------------------------+
 !                                                             ! 1.01 11:55
 !                    Master Symbol Modification               ! 1.01 16:29
 !                                                             ! 1.01 12:38
 !  Symbo +-----------------------------------------------+    ! 1.00 16:07
 !  Symbo !                                               !    ! 1.01 09:38
 !        !        Symbol: Numeric Range Check            !    ! 8.01 10:09
 !        !                                               ! __ ! 1.01 12:36
 !        !  Owner         ===> EXAMPLE                   ! __ !
 !     Pr !  Symbol Table   ===> ADMIN                     !  _ !
 !   Prom !  Symbol        ===> NUMBER                    ! __ !
 !        !                                               ! __ !
 !        !  Value from    ===> 1_________                ! __ !
 !        !  Value to      ===> 10________                ! __ !
 !        !                                               ! __ !
 ! Enter- !  ---PF1--PF3---------PF5---------PF9----      ! -- ! ************
 !        !     Help End         Save        Delete       ! t  !
 +------- +-----------------------------------------------+ -----+ F11--PF12---
      Help  Add   End         Save        Up    Down        Print
```

In the following example, a value was entered outside the specified value range. In this case, an error message appears and Entire Operations does not accept the invalid value. This also applies to symbol APIs.

```
10.11.01               *** Entire Operations 4.1.1 ***              14:02:15
 Owner   REQUEST         Master Symbol Table P185905
 Network P185905                                                     Run
 +-------------------------------------------------------------+ ------------
 ! EOR0160 - Range is 1 thru 10                                !
 !                    Master Symbol Modification               ! 1.01 16:13
 !                                                             ! 1.01 16:30
 !  Symbol Table ===> P185905___              Owner REQUEST    ! 1.01 16:13
 !  Symbol  Name ===> NUMBER_____________  Network P185905     ! 1.01 17:15
 !        Format ===> N                          Run           ! 1.01 17:16
 !         Value ===> 11_________________________________      ! 1.01 17:17
 !                    _________________________________        ! 1.01 17:17
 ! Be careful with insertions or deletions.                    ! 1.01 17:17
 ! The 2 lines will be concatenated to one symbol value.       ! 1.01 17:16
 !     Prompting ===> A                    Update Mode ===> _   ! 1.01 17:16
 !   Prompt Text ===> _________________________________        ! 1.01 17:16
 !                    _________________________________        ! 1.01 17:16
 !                    _________________________________        ! 1.01 17:16
 !                    _________________________________        ! 1.01 17:16
 !                    _________________________________        ! ************
 ! Enter-PF1---PF2---PF3-----PF5----PF8----PF9---PF10---PF11--  !
 !       Help  Add   End     Save   RgChk  Mult  Copy   UsrRt   ! F11--PF12---
 +-------------------------------------------------------------+
```

# Deleting a Symbol from a Symbol Table

**To delete a symbol from the master symbol table**

1. Type **D** in the line command input field of the selected symbol on the Master Symbol Table screen. Press Enter.

   A window opens in which you can confirm deletion by entering the symbol name.

2. Type in the symbol name.
3. Press Enter to delete the symbol.
4. Press PF3 (End) to return to the Master Symbol Table screen.

**Note:**
You can delete individual symbols from a symbol table even if the table is specified for one or more MAC-type jobs. If the symbol table is specified for any job, the deleted symbol cannot be substituted when the JCL is dynamically generated. The Monitor records this event by writing a message to the log.

 Copyright © Software AG 2003

# Recursive Symbol Replacement

Symbols can be used within other symbols.

## Example:

| Symbol | Value |
|---|---|
| PREFIX | EOR |
| STEPLIB | §PREFIX..EXAMPLE.LOAD |

§STEPLIB is replaced by EOR.EXAMPLE.LOAD.

**Note:**
If a point marks the end of a symbol, it is deleted on replacement. With recursive replacement, the deletion takes place replacement by replacement. Thus, a sufficient number of points must be coded. If a point is to remain at the end of the symbol, two points must be coded.

# Symbol Replacement in Job Control - JCL

For symbol replacement in Job Control (JCL) the following particularities apply:

| | |
|---|---|
| Column 72 contains one blank **and** the columns 73 - 80 contain digits. | The columns 71-80 of the line are saved before the first replacement, and they are written back after the last replacement. |
| Column 72 contains a ’-’ (hyphen) **and** the columns 73-80 contain blanks. | The columns 71-80 of the line are saved before the first replacement, and they are written back after the last replacement. |
| Column 71 -80 contains ’, ’ (8 blanks behind the hyphen) | The columns 71-80 of the line are saved before the first replacement, and they are written back after the last replacement. |
| Intermediate results | Intermediate results can even be longer than 71 characters. They are only overwritten by possibly saved strings at the end of the replacement as a whole. |

 Copyright © Software AG 2003

# Copying a Master Symbol Table

This subsection covers the following topics:

- Symbol Table Master Definition Copy
- Field Descriptions
- Columns

---

## Symbol Table Master Definition Copy

When defining a new master symbol table, you can select an existing table from the Master Symbol Table Maintenance facility as a model for the new table.

**To copy a master symbol table**

1. In the Master Symbol Tables window, type **C** in the line command input field of the table to be copied. Press Enter.

   The following window opens:

```
 11.11.01              *** Entire Operations 4.1.1 ***              12:29:16
 Owner SN                          Main Menu                  User ID GHH
 ---------------------------------------------------------------------------
            +-------------------------------------------------+
      Main  !                                                 !
            !    Master Symbol Tables of Owner SN________     !
   1  Netwo !                  Table Selection *_________     ! ment (V132)
   2  Activ !                Cmd     Table Name               ! ement (V131)
   3  Calen !                 _      ABC1                     !
   4  Log +-------------------------------------------------------------+
   5  Sym !                                                              !
   6  Sys !             Symbol Table Master Definition Copy              !
   7  Rep !                                                              !
   8  Imp !      From                        To                          !
   9  Hel !      Owner     ==> SN________    Owner    ==> SN             !
          !      Table     ==> EX-ST-COMN    Table    ==> __________     !
          !      Alt. File ==> N (Y/N)                                  !
          !                                                              !
          !  PF3 End                                                     !
          +-------------------------------------------------------------+
 Command => !  Enter-PF1--PF2--PF3----PF5----PF7--PF8--PF12-    ! _______
Enter-PF1-- !        Help Add  End    Save   Up   Down Menu     ! -PF11--PF12---
      Help  +-------------------------------------------------+
```

   The names of owner and table to copy **from** already appear in the From fields. (If necessary, you can also enter a different owner and table in the **From** fields).

2. To open selection windows for owners and tables, use an asterisk * as wildcard.
3. Enter name of the owner and table to copy **to** in the **To** fields.

### Notes:

- If an alternate symbol table is defined in the **Entire Operations Defaults** (submenu of the System Services Menu), you can copy a symbol table from there by setting the Alt.File field to **Y**.
- You can only copy a symbol table to another **owner** if you are authorized to access networks belonging to that owner.

- The current owner is being used as target symbol table owner. If necessary, please use the direct command SET OWNER to change the current owner before a symbol table copy action. The target symbol table owner field is protected, due to profile and security reasons.
- You can copy a symbol table to an existing table and merge the two tables.

4. Press Enter to copy the table to a new table or to combine it with an existing table.
   - If you have simply copied to a new table, this new table is now listed in the Master Symbol Tables window.
   - If you have combined two tables, this is performed in the following manner:
     - All symbols and their values are copied successively from the source table to the target table.
     - If an identical symbol with identical value(s) exists in both the source and the target table, then this symbol is not copied.
     - If, however, the values of this identical symbol differ, the following window opens:

```
 11.11.01               *** Entire Operations 4.1.1 ***               10:16:18
 Owner SN                          Main Menu                    User ID GHH
 ---------------------------------------------------------------------------
            +-------------------------------------------------+
  +-------------------------------------------------------------------------+
  !                                                                         !
  !             Symbol Table Master Definition Copy                         !
  !    Identical Symbol detected -  Please mark the desired Value           !
  !    M   Owner      Symbol-Tab Symbol               modified by           !
  !        Copy from:                                                       !
  !        SN         DEMO       STEPLIB              GHH      27.11.00 11:53 !
  !      User Routine            Library                                    !
  !    _ Value NATOP.V110                                Multiple N          !
  !        Copy to:                                                         !
  !        SN         DEMO-2     STEPLIB              GHH      11.05.01 10:16 !
  !      User Routine            Library                                    !
  !    _ Value NATOP.V210                                Multiple N          !
  !                                                                         !
  !  PF3 End                                                                !
  +-------------------------------------------------------------------------+
 Command => !  Enter-PF1--PF2--PF3----PF5----PF7--PF8--PF12-   ! _______
Enter-PF1-- !        Help Add  End    Save   Up   Down Menu    ! -PF11--PF12---
      Help  +-------------------------------------------------+  Owner Mail
```

The column headings and input fields are explained below.

5. Use any character to mark the value to be retained in the target table after copying:

In the above example, the symbol STEPLIB was found in the source as well as in the target table.

- If you mark Value NATOP.V110, then the symbol STEPLIB in the table DEMO-2 will have Value NATOP.V110 after copying. Value NATOP.V210 is overwritten.
- If you mark Value NATOP.V210, the symbol STEPLIB in the table DEMO-2 retains this value.

**Note:**
Every time a symbol value in the target table is overwritten by the pertinent value in the source table, a corresponding message is written to the log. When the whole copying process has been completed, a message is also written to the log.

# Field Descriptions

| Field | Description |
|---|---|
| Value | Use any character to mark the symbol value to be retained. |

 Copyright © Software AG 2003

# Columns

| Column | Description |
|---|---|
| Owner | Owner of the source and of the target table. |
| Symbol Tab | Names of source and target tables. |
| Symbol | Name of the symbol which exists in both tables. |
| modified by | User ID of the person who last modified the table as well as date and time of last modification. |
| Multiple | **Y** = Multiple symbol values exist.<br>**N** = Multiple symbol values do not exist. |

# Deleting a Master Symbol Table

**To delete a master symbol table**

1. Type **D** in the line command input field of the selected symbol table in the Master Symbol Tables window. Press Enter.

   If the symbol table is not specified for any job, the following window opens:

```
 11.11.01               *** Entire Operations 4.1.1 ***               15:26:17
 Owner SN                          Main Menu                   User ID GHH
 ---------------------------------------------------------------------------
            +-----------------------------------------------------+
      Main  !                                                     !
            !    Master Symbol Tables of Owner SN________         !
   1  Netwo !                  Table Selection *_________         ! ment (V132)
   2  Activ !                Cmd     Table Name                   ! ement (V131)
   3  Calen !                 _      ABC1                         !
   4  Log I !  +-----------------------------------------------+
   5  Symbo !  !                                               !
   6  Syste !  !  Please confirm                               !
   7  Repor !  !  the Deletion of GHH-DEMO                     !
   8  Impor !  !  by entering GHH-DEMO                         !
   9  Help  !  !          ==> ________________________________  !
            !  !  PF3 End                                      !
            !  +-----------------------------------------------+
            !                 _      E64-MPA                     !
            !  C Copy D Delete L List Symbols W Where used      !
            !                                                   !
 Command => !  Enter-PF1--PF2--PF3----PF5----PF7--PF8--PF12-    ! _______
Enter-PF1-- !        Help Add  End    Save   Up   Down Menu     ! -PF11--PF12---
      Help  +-----------------------------------------------------+
```

2. Enter the symbol table name.
3. Press Enter to delete the table.

 Copyright © Software AG 2003

# Listing Jobs Using a Symbol Table

This subsection covers the following topics:

- Listing Jobs Using a Symbol Table
- Column Headings

---

## Listing Jobs Using a Symbol Table

If, during deletion, a message appears:

```
Symbol Table used in Definitions
```

This means that the symbol table is specified for one or more jobs.

**To list the jobs in which it is used**

- Type **W** in the line command input field of the selected symbol table in the Master Symbol Tables window. Press Enter.

  The following window opens (example):

```
 11.11.01               *** Entire Operations 4.1.1 ***               16:01:01
 Owner SN                          +----------------------------------------+
 --------------------------------- !                                        !---
 Option ==> +--------------------- !         Symbol Table Usage             !
            !                      !                                        !
            !    Master Symbol Tab !      Owner        SN                   !
            !                      !      Symbol Table EXAM-ST1             !
            !                Cmd   !                                        !
            !                 _    !  Network    Job        Type   Run      !
            !                 _    !  BIG-1      JOB-01     Def.            !
            !                 _    !  BIG-1      JOB-012    Def.            !
            !                 _    !  BIG-1      JOB-013    Def.            !
            !                 w    !  BIG-1      JOB-014    Def.            !
            !                 _    !  BIG-1      JOB-019    Def.            !
            !                 _    !  BIG-1      JOB-02     Def.            !
            !                 _    !  BIG-1      JOB-04     Def.            !
            !                 _    !  BIG-1      JOB-06     Def.            !
            !                 _    !                                        !
            !  C Copy D Delete L L !  PF3 End   PF8 Down                   !
            !                      +----------------------------------------+
 Command => !  Enter-PF1--PF2--PF3----PF5----PF7--PF8--PF12-   !________
Enter-PF1-- !        Help Add  End    Save   Up   Down Menu    !--PF11--PF12---
      Help  +-------------------------------------------------+
```

## Column Headings

Meaning of the column headings:

| Column | Description | |
|---|---|---|
| Network | Name of job network. | |
| Job | Job name. | |
| Type | Specifies whether job is active or not. Possible values: | |
| | Def. | Symbol table is specified for job on the master data base. |
| | Run | Symbol table is specified for active job. |
| Run | If the symbol table is used by an active job, this field displays the job's run number. | |

You cannot delete a symbol table until you have either specified another symbol table for the job(s) which use it, or deleted all jobs for which it is specified.

 Copyright © Software AG 2003

# Symbol Prompting

This section covers the following topics:

- Standard Symbol Prompting
- Displaying a Help Text for a Symbol
- Cancelling Symbol Prompting
- Repeating Symbol Prompting
- Entering Long Symbol Values and Modifying Active Symbols
- Accepting All Symbols and Printing Symbols after Prompting
- User-defined Symbol Prompting
- Symbol Modification without Prompting
- Parameter List NOPSYP-A
- Global Symbol Modification Exit
- Symbol Replacement

Copyright © Software AG 2003 

# Standard Symbol Prompting

This subsection covers the following topics:

- Symbol Prompting for a Specific Table
- Line Commands: Symbol Prompting
- Special PF Keys: Symbol Prompting

## Symbol Prompting for a Specific Table

Entire Operations provides a standard method for symbol prompting. On a full-sized screen, all necessary symbols are displayed and can be modified by simply typing over them.

When a network is activated with symbols defined for prompting, the following screen appears:

```
 20.11.01                *** Entire Operations 4.1.1 ***              16:08:36
 Owner    EXAMPLE        Symbol Prompting for Table EXAM-ST1
 Network  E62-NET                              Run 261   on 20.11.01 at 16:08
 ---------------------------------------------------------------------------
 C  Symbol                Value
 _  CLASS                 G_____________________________________________
 _  JOBLIB                EOR.EXAMPLE.LOAD______________________________
 _  MSGCLASS              X_____________________________________________
 _  PARM-1                8888__________________________________________
 _  STEPLIB               EOR.EXAMPLE.LOAD______________________________
 _                        ______________________________________________
 _                        ______________________________________________
 _                        ______________________________________________
 _                        ______________________________________________
 _                        ______________________________________________
 _                        ______________________________________________
 _                        ______________________________________________
 _                        ______________________________________________
 _                        ______________________________________________
 H  Help   L  Long Value
 ******************************** Bottom of Data ******************************
Enter-PF1---PF2---PF3---PF4---PF5---PF6---PF7---PF8---PF9---PF10--PF11--PF12---
                  End         Accpt Cncl  Up    Down
```

The Symbol Prompting screen lists all the symbols requiring prompting in the symbol table and their values. The symbol values are taken from the corresponding Master Symbol Table.

You can modify each symbol value or leave it unchanged. The new values remain in the symbol table until the symbol table is modified specifically or until the next prompting after manual activation of a job network that uses the symbol table.

**Notes:**

1. Values which are longer than 40 characters can only be modified using the line command **L**. Direct field processing is not allowed for these values.
2. If **plausibility checking** is defined for the symbol, you can only enter a valid symbol value. Incorrect values are rejected and a user-defined error message is issued.
3. Standard symbol prompting is not used in NET-type (subnetworks) jobs.

 Copyright © Software AG 2003

# Line Commands: Symbol Prompting

| Cmd | Description |
|---|---|
| H | Display a help text for the symbol. |
| L | Enter Value longer than **40** characters and modify other symbol parameters. |

# Special PF Keys: Symbol Prompting

| Key | Name | Function |
|---|---|---|
| PF3 | End | Cancel symbol prompting and restore to former status. |
| PF5 | Accpt | Accept all symbols for this activation. |
| PF6 | Cncl | Cancel this activation.<br>If symbol prompting is done during a network or job activation, the corresponding activation is cancelled.<br>Otherwise, only symbol prompting itself is cancelled. |
| PF7 | Up | Scroll back to the top of the symbol list. |
| PF8 | Down | If **** more **** appears in the bottom line, you can display more symbols by scrolling down with <PF8>. You must press this key to get to the last screen and accept all symbols with <PF5>. |

Copyright © Software AG 2003 

# Displaying a Help Text for a Symbol

**To display a short help text for a symbol**

1. Type **H** in the line command input field of the appropriate symbol on the Symbol Prompting screen.
2. Press Enter.

   A window opens with a short help text explaining the symbol.

 Copyright © Software AG 2003

# Cancelling Symbol Prompting

**To cancel symbol prompting**

- Press PF6 (Cncl).

# Repeating Symbol Prompting

**To repeat symbol prompting from the beginning**

- Press PF6 (Cncl) to cancel the current network or job activation. Start the activation again.

 Copyright © Software AG 2003

# Entering Long Symbol Values and Modifying Active Symbols

This subsection covers the following topics:

- Entering Long Symbol Values and Modifying Active Symbols
- Field Descriptions: Active Symbol Modification
- Special PF Keys: Active Symbol Modification

---

## Entering Long Symbol Values and Modifying Active Symbols

If symbol **Value** is longer than the **40** characters on the Symbol Prompting screen, you can enter another **40** characters (up to a maximum of **80**) in the Active Symbol Modification window. This window also allows you to modify other symbol parameters.

**To enter long symbol values and modify active symbols**

- Enter **L** in the line command input field of the appropriate symbol on the Symbol Prompting screen. Press Enter.

  The Active Symbol Modification window opens:

```
10.11.01                *** Entire Operations 4.1.1 ***              16:25:11
 Owner    REQUEST       Symbol Prompting for Table P185905
 Network  P185905                                Run 21    on 10.11.01 at 16:25
 +-------------------------------------------------------------+ ------------
 !                                                              !
 !                    Active Symbol Modification                ! nger-than-o
 !                                                              ! ___________
 !  Symbol Table ===> P185905___              Owner REQUEST      !
 !  Symbol  Name ===> LONG1_______________  Network P185905      !
 !        Format ===> A                        Run 21           !
 !         Value ===> This-is-a-very-long-value-which-is-much-   !
 !                    longer-than-one-line____________________   !
 ! Be careful with insertions or deletions.                     !
 ! The 2 lines will be concatenated to one symbol value.        !
 !     Prompting ===> A                     Update Mode ===> _   !
 !   Prompt Text ===> ________________________________________   !
 !                    ________________________________________   !
 !                    ________________________________________   !
 !                    ________________________________________   !
 !                    ________________________________________   !
 ! Enter-PF1---PF2---PF3-----PF5----PF8----PF9---PF10---PF11--   ! ************
 !       Help  Add   End     Save   RgChk  Mult  Copy   UsrRt    ! F11--PF12---
 +-------------------------------------------------------------+
```

  This window allows you to modify the symbol value. The two lines of the Value field are concatenated for the long symbol value.

  Be careful with insertions and deletions:
  The 2 lines of the field Value will be concatenated to one symbol value.

# Field Descriptions: Active Symbol Modification

The fields in the Active Symbol Modification window are identical to the fields in the Master Symbol Addition window. For field descriptions, see Field Descriptions: Master Symbol Addition.

# Special PF Keys: Active Symbol Modification

For a description of PF key functions, see Special PF Keys: Master Symbol Addition.

 Copyright © Software AG 2003

# Accepting All Symbols and Printing Symbols after Prompting

**When you have made all desired modifications**

1. You must press PF5 (Accpt) from the **last screen** to confirm symbol prompting and accept all symbols for this activation.

   If there are several screens of symbols, **** more **** will appear in the bottom line.

2. Press PF8 (Down) to display more symbols until you get to the last screen. You can now accept all symbols by pressing PF5.

   You are then asked if you want to print the symbols. A window opens in which you can enter the printer name:

```
 20.11.01                *** Entire Operations 4.1.1 ***                16:10:49
 Owner    EXAMPLE        Symbol Prompting for Table EXAM-ST1
 Network  E62-NET                                Run 261   on 11.07.96 at 16:08
 ------------------------------------------------------------------------------
 C  Symbol                Value
 _  CLASS                 G_____________________________________________________
 _  JOBLIB                 EOR.EXAMPLE.LOAD_____________________________________
 _  MSGCLASS               X_____________________________________________________
 _  PARM-1                 8888__________________________________________________
 _  STEPLIB                EOR.EXAM +-------------------------------------------+
 _                        ________ !                                           !
 _                        ________ !   Printing of Prompted Symbols            !
 _                        ________ !                                           !
 _                        ________ !             Printer Selection             !
 _                        ________ !                                           !
 _                        ________ !       Please enter printer: ________      !
 _                        ________ !                                           !
 _                        ________ !  PF3 End                                  !
 _                        ________ !                                           !
 L  long value                     +-------------------------------------------+
 ********************************* Bottom of Data ******************************
Enter-PF1---PF2---PF3---PF4---PF5---PF6---PF7---PF8---PF9---PF10--PF11--PF12---
                             Accpt Cncl  Up    Down
```

3. Enter the printer name in the field Please enter printer.
4. Press Enter to print the symbols to the selected printer.

   If you do not want to print the symbols, press PF3 (End) to return to the Symbol Prompting screen.

   If you generally do not want to print the symbols or display the above window, enter **N** for the function Symbol Printing after Prompting under Reporting in your profile settings. For more information, see the subsection Reporting Functions in the section System Administrator Services of the Entire Operations Administration Documentation.

# User-defined Symbol Prompting

This subsection covers the following topics:

- Defining Symbol Prompting User Routines
- Field Descriptions: Symbol Prompting User Routine
- Special PF Keys: Symbol Prompting User Routine

## Defining Symbol Prompting User Routines

If you want to use your own prompting screens, with your own help, plausibility checks, etc., you can define customized prompting routines to activate job networks.

**To define your own symbol prompting routines**

1. Select the Network and Job Maintenance option from the Main Menu. Press Enter.

   The Network Maintenance screen appears.

2. On the Network Maintenance screen, type **M** in the line command field of the network for which symbol prompting is to be defined. Press Enter.

   The Network Modification window opens with the current values for the network.

3. Press PF8 (SP-UR).

   The Symbol Prompting User Routine window opens:

```
 20.11.01               *** Entire Operations 4.1.1 ***              16:14:18
 Owner SN                       Network Maintenance
 +-------------------------------------------------------------------------+
 !                                                                         !-
 !                          Network Modification                           !
 !  Network      ===> E62-NET___                     Owner ===> EXAMPLE    !
 !  Description  ===> Triggers another Network_____________________        !
 !                                                                         !
 !  Default Values for the Jobs                                            !
 !    Execution Nod +-----------------------------------------+ ________  !
 !    JCL Node      !                                         ! ________  !
 !    JCL Location  !      Symbol Prompting User Routine      ! ________  !
 !    Symbol Table  !                                         ! ________  !
 !                  !  Symbol Prompting for this network      ! ________  !
 !                  !  will be done by                        ! ____      !
 !                  !           Natural Library ==> ________  !           !
 !    File    ===>  !              User Routine ==> ________  !_________  !
 !    Volser  ===>  !         Modification                    !           !*
 !  --PF1-----PF3-- !         without Prompting ==> N (Y/N)   !---PF12--  !
 !    Help    End   !                                         !e  Menu    !
 +----------------- !  PF1 Help PF3 End PF5 Refr  PF9 Delete  !-----------+
Enter-PF1---PF2---P +-----------------------------------------+--PF11--PF12---
      Help  Add   End         Save        Up    Down             NxtAc Menu
```

   Write the user routine as a Natural subprogram and use the supplied parameter list NOPSYP-A (see Symbol Modification without Prompting). This parameter list contains all needed environment parameters. The list of symbol tables used for this network activation will be passed to the Entire Operations API routine.

 Copyright © Software AG 2003

The symbols must be read and updated by the Entire Operations API routine NOPUSYxN (x = 1, 2, ...), which allows sequential reading in the active symbol table.

# Field Descriptions: Symbol Prompting User Routine

The input fields of the Symbol Prompting User Routine window are described in the following table:

| Field | Description |
|---|---|
| Natural Library | Enter the name of the Natural library, where the symbol prompting user routine resides. |
| User Routine | Enter the name of the symbol prompting user routine. |
| Modification without Prompting | If you enter **Y**, symbol modification is managed by the user routine specified.<br>If you enter **N**, user performs symbol prompting interactively (in dialogue with Entire Operations).<br>If you enter **B**, user **first** performs symbol prompting interactively and **then** symbol modification is managed by the specified user routine. This allows you to set other symbols which are dependent on prompting. |

# Special PF Keys: Symbol Prompting User Routine

You can perform the following functions from the Symbol Prompting User Routine window using these PF keys:

| Key | Name | Function |
|---|---|---|
| PF5 | Refr | Forces an update of the user routine in the internal exit directory. |
| PF9 | Delete | Delete data for symbol prompting user routine entered here. |

# Symbol Modification without Prompting

You can adapt the symbol table for each run by defining a user routine without prompting (in background). Set the field Modification without Prompting in the Symbol Prompting User Routine window to **Y**.

This can be used to modify active symbols depending on the values of other symbols, or of anything else.

The user routine is called by the Entire Operations Monitor after the creation of the active symbol tables, but before the JCL loading. If the user routine is missing or receives a run time error, the network activation will be stopped and a message will be sent to the mailbox, which is assigned to the network as message recipient. If no mailbox is assigned, the message is sent to the SYSDBA mailbox. For more details on mailboxes, see the section Mailboxes.

Code the user routine analogous to the symbol prompt user routine and use the delivered parameter list NOPSYP-A. Do not code any screen I/O's.

 Copyright © Software AG 2003

# Parameter List NOPSYP-A

This subsection covers the following topics:

- Parameter List NOPSYP-A
- Return Codes to Be Set by the Symbol Modification User Routine

## Parameter List NOPSYP-A

```
*   NOPSYP-A
*   ENTIRE OPERATIONS
*   USER ROUTINE PARMLIST FOR
*   SYMBOL PROMPTING
*
*   27.02.99 CREATED                        /* (E-0026)
*   19.10.99 ADD NW SYMBOL TABLE            /* (114821)
*   19.05.01 REWRITE MOD. SYMBOLS           /* (114821)
*   --------------------------------
  1 P-CALL-PLACE                      A    3 /* FROM WHERE CALLED IN NOP
*     'SYP'  SYMBOL PROMPTING ONLINE
*     'SYM'  SYMBOL MODIF.    BATCH         (110745)
  1 P-RC                              N    4 /* OUT: RETURN CODE
*                                              0    OK
*                                              1    NO SYMBOLS PROMPTED
*                                              2    ACTIVATION CANCELLED
*                                              IN:
*                                              3    REWRITE MODIFIED SYMBO
*                                                   TO SYMBOL MASTER(14091
  1 P-RT                              A   70 /* OUT: RETURN TEXT
*
  1 P-OWNER                           A   10 /* OWNER OF NETWORK
  1 P-NETWORK                         A   10
  1 P-JOB                             A   10
  1 P-RUN                             P   13
  1 P-ACTIVATION-TIME                 T
  1 P-EARLIEST-START                  T
  1 P-NETWORK-SYMBOL-TABLE            A   10 /* NETWORK DEFAULT TABLE
  1 P-SYMBOL-TABLES                   A   12 (1:20)
R 1 P-SYMBOL-TABLES                         /* REDEF. BEGIN : P-SYMBOL-TAB
  2 P-SYMBOL-TABLES-1                       (1:20)
  3 P-SYMBOL-TABLE-STATUS             A    2
*                                              '00' EXTRACTED; UNDEFINED
*                                              '10' NO PROMPTING NECESSARY
*                                              '20' PROMPTING REQUIRED
*                                              '30' PROMPTING DONE
  3 P-SYMBOL-TABLE                    A   10
  1 P-DATE-FORMAT                     A    1
*                                              A   AMERICAN
*                                              E   EUROPEAN
*                                              G   GERMAN
*                                              I   INTERNATIONAL
*   -- END OF PARAMETER AREA --
```

# Return Codes to Be Set by the Symbol Modification User Routine

| P-RC | Meaning |
|---|---|
| 0 | OK, modifications were done. |
| 1 | OK, no symbols prompted or modified. |
| 2 | Activation cancelled. |
| 3 | (on input) Rewrite modified symbols to master symbol table. |

 Copyright © Software AG 2003

# Global Symbol Modification Exit

For the active symbol modification a global symbol modification exit can be defined too. This global exit will be used only if the is **no** specific exit defined on the network level. The global exit is called with the same parameter list as the exit on the network level.

# Symbol Replacement

This subsection covers the following topics:

- Escape Character and End of Symbol
- Algorithm
- Fixed Positions within the Line
- Symbol Replacement with Multiple Symbol Values
- Predefined Symbols

---

## Escape Character and End of Symbol

Symbols to be replaced are detected by a preceding **escape character** anywhere in the JCL. The symbol name is limited by a text delimiter, like a blank, a comma (,), a semicolon (;), a period (.), etc. A single period (.) after a symbol is removed during replacement. But two consecutive periods (..) are converted to one period (.). This is important for the dynamic creation of file names. Recursive symbol replacement (symbols within symbols) is also possible.

### Example: Recursive Symbol Replacement

```
/* IN §JJ. SOFTWARE AG
```

changes to the following, when J = 20 and JJ = §J.01:

```
/* IN 2001 SOFTWARE AG
```

The advantage of this method is that symbol replacement is performed within the fixed positions.

## Algorithm

The following algorithm is used for symbol replacement:

1. Search for the symbol farthest to the left.

   If none (or no more) available -> end.

2. Replacement

   In case of error -> end.

3. Write updated line.
   Continue at (1).

   This makes recursive symbol replacement (symbol with symbols) possible.

## Fixed Positions within the Line

Multiple symbol replacement can cause a shift within a line. However, in the following cases, parts of the line are kept in a fixed position:

 Copyright © Software AG 2003

1. Symbols do not follow one another directly.
2. The columns 72 to 80 always remain fixed. If column 70 contains a blank and column 71 a comma, then these will also remain fixed.
3. If a symbol is followed by at least 2 blank spaces, the rest of the line is kept in its original position, unless the symbol value would overlap with it. For example:

   ```
   /FILE ABC.§VAR             COMMENT
   ```

   changes to the following, when VAR=REPLACE:

   ```
   /FILE ABC.REPLACE          COMMENT
   ```

4. If a symbol is followed directly by continuous text, then by at least 2 blank spaces, then by an exclamation point ! and continuous text: the symbol is replaced as in (2) and the exclamation point ! is replaced with blank spaces. For example:

   ```
   /FILE ABC.§VAR..XYZ       !COMMENT
   ```

   changes to the following, when VAR=REPLACE:

   ```
   /FILE ABC.REPLACE..XYZ     COMMENT
   ```

# Symbol Replacement with Multiple Symbol Values

To replace a symbol with multiple values when a job is activated numerous times concurrently, you must use P-SUFFIX. to identify the variable to be replaced. This is the variable you entered in the Suffix Symbol field in the Master Job Definition window (see the field description in the section Job Maintenance).

Multiple symbol replacement is performed, only if you use P-SUFFIX as the placeholder for this variable. For information on defining multiple symbol values, see here.

**Note:**
If Suffix Symbol contains no values, then the multiple job is activated as a temporary dummy job.

You obtain a specific occurrence of a multiple symbol by using the symbol function MV (multiple value) delivered with Entire Operations.

# Predefined Symbols

You may also use a large number of predefined symbols.

## Symbol Replacement in Subnetworks

To be able to enter symbols in subnetworks as well, you can attach a symbol table to the main network; this table contains all symbols to be queried in the jobs of the subnetwork(s). At the same time, the symbol tables can be linked to the corresponding jobs of the subnetwork(s) by means of symbols whose values are not to be retrieved. After symbol entry, this creates active symbol tables attached to the main network.

On job level, Entire Operations tries to load the symbols from the level(s) above if a symbol with the corresponding symbol table is not found, for example from the active symbol table of the main network. Entire Operations does not create active symbol tables on subnetwork job level as the run numbers are not yet known at the time of the main network’s activation and as symbol prompting is activated first.

The following example screens illustrate the procedure:

```
 12.11.01                *** Entire Operations 4.1.1 ***               10:45:40
 Owner GFR                     Network Maintenance
 Selection OR_______
- +-----------------------------------------------------------------------+ --
  !                                                                       !
  !                          Network Modification                         !
  !  Network      ===> SUB-1_____                   Owner ===> GFR        !
  !  Description  ===> sub-1_____________________________________         !
  !                                                 Loop existing ===> N  !
  !  Default Values for the Jobs                                          !
  !    Execution Node ===> 146  MVS/ESA      Symbol Table ===> GFR-ST3___  !
  !    JCL Node       ===> 146  MVS/ESA                                   !
  !    JCL Location   ===> ___           Sym.Table Activation Mode ===> X  !
  !                                                                       !
  !    File   ===> ____________________________________________________  !
  !    VolSer ===> ______                            Password ===>         !
  !                                                                       !
  !  --PF1-----PF3-----PF5---PF6---PF7---PF8---PF9---PF10---PF11---PF12--  ! **
  !    Help    End     Save  Spec  Symb  SP-UR DfJb  Copy   MsgRe  Menu   !
  +-----------------------------------------------------------------------+
 Command => ____________________________________________________________
Enter-PF1---PF2---PF3---PF4---PF5---PF6---PF7---PF8---PF9---PF10--PF11--PF12---
      Help  Add   End         Save        Up    Down              NxtSt Menu
```

Main network with symbol table containing symbols to be queried (GFR-ST3).

```
 12.11.01                *** Entire Operations 4.1.1 ***               10:47:20
 Owner GFR                      Job Maintenance              Network SUB-1
 ---------------------------------------------------------------------------
 Cmd C R PU Job       Type Description           File or Library         Member
            *---------
 _          DUMMY      DUM dummy
 _   C1     SUB-11     NET                        GFR/TESTNET10
 _
 _
 _
 _
 _
 _
 _
 _
 _
 ******************************** Bottom of Data ******************************
 A Depend. C Copy D Delete E Edit G Pregen. I Input Cond. J JCL L Resources
 M Modify  O EOJ Chk + Act  P Prose  R Activate  S Scheduling Parms  U Add.Log
 Command => ____________________________________________________________
Enter-PF1---PF2---PF3---PF4---PF5---PF6---PF7---PF8---PF9---PF10--PF11--PF12---
      Help  Add   End         Save        Up    Down                     Menu
```

This screen shows the main network's jobs DUMMY and SUB-11 with symbol table.

 Copyright © Software AG 2003

```
  +-----------------------------------------------------------------------+ 0
  !                                                                       !
  !                        Job Definition (Master)                        ! --
  !                                                                       ! er
  !  Job Name       ==> DUMMY_____        Mod ==> GFR      27.10.99 17:10  !
  !  Description    ==> dummy___________________________                  !
  !  Job Type       ==> DUM                                               !
  !  Execution Node ==> 146 MVS/ESA                                       !
  !                                                                       !
  !  Special Type   ==> _          Symbol Table  ==> GFR-ST3___           !
  !  Restartable    ==> N          Suffix Symbol ==> ____________________  !
  !                                Escape Characters:    Activation ==> §  !
  !                                                      Submit     ==> $  !
  !                                                                       !
  ! Enter-PF1---PF2--PF3--PF4---PF5---PF6---PF7---------PF9--PF10---PF12-  !
  !       Help  Add  End  Edit  Save  Spec  Symb        JCL  Copy   Menu   !
  +-----------------------------------------------------------------------+
 ******************************** Bottom of Data ********************************
 A Depend. C Copy D Delete E Edit G Pregen. I Input Cond. J JCL L Resources
 M Modify  O EOJ Chk + Act  P Prose  R Activate  S Scheduling Parms  U Add.Log
 Command => ____________________________________________________________
Enter-PF1---PF2---PF3---PF4---PF5---PF6---PF7---PF8---PF9---PF10--PF11--PF12---
      Help  Add   End         Save        Up    Down                    Menu
```

The symbol table containing symbols to be queried (GFR-ST3) is linked to the dummy job. No symbol tables are attached to the subnetworks themselves.

```
  +-----------------------------------------------------------------------+ 1
  !                                                                       ! 0
  !                        Job Definition (Master)                        ! --
  !                                                                       ! er
  !  Job Name       ==> TESTJOB11_        Mod ==> GFR      27.10.99 16:37  !
  !  Description    ==> ______________________________                    ! 4
  !  Job Type       ==> JOB                                               !
  !  Execution Node ==> 148 MVS/ESA                                       !
  !                                                                       !
  !  Special Type   ==> _          Symbol Table  ==> GFR-ST2___           !
  !  Restartable    ==> _          Suffix Symbol ==> ____________________  !
  !                                Escape Characters:    Activation ==> §  !
  !                                                      Submit     ==> $  !
  !                                                                       !
  ! Enter-PF1---PF2--PF3--PF4---PF5---PF6---PF7---------PF9--PF10---PF12-  !
  !       Help  Add  End  Edit  Save  Spec  Symb        JCL  Copy   Menu   !
  +-----------------------------------------------------------------------+
 ******************************** Bottom of Data ********************************
 A Depend. C Copy D Delete E Edit G Pregen. I Input Cond. J JCL L Resources
 M Modify  O EOJ Chk + Act  P Prose  R Activate  S Scheduling Parms  U Add.Log
 Command => ____________________________________________________________
Enter-PF1---PF2---PF3---PF4---PF5---PF6---PF7---PF8---PF9---PF10--PF11--PF12---
      Help  Add   End         Save        Up    Down                    Menu
```

On the lowest job level, a symbol table is linked whose symbols are not queried (GFR-ST2). You can make the JCL definition through PF9.

```
  +-----------------------------------------------------------------------+ 1
  !                                                                       ! 0
  +-----------------------------------------------------------------------+ --
  !                                                                       ! er
  !                      Job: JCL Definition (Master)                     !
  !                                                                       ! 4
  !  Job Name       ==> TESTJOB11         Mod ==> GFR      27.10.99 16:37  !
  !  Description    ==>                                                   !
  !  Job Type       ==> JOB                                               !
  !  Execution Node ==> 148 MVS/ESA           Symbol Table ==> GFR-ST2     !
  !                                                                       !
  !  JCL Location   ==> PDS                                               !
  !  JCL Node       ==> 148 MVS/ESA                                       !
  !  File/NatLib    ==> SN.GFR.SOURCE_______________________________      !
  !  Member         ==> IEFBR14_ ________                                 !
  !  VolSer         ==> ______  (if not catlgd)   Password ==>            !
  !                                                                       !
  ! Enter-PF1--------PF3--PF4---PF5---PF6---PF7---PF8---------------PF12-  ! **
  !       Help       End  Edit  Save  Spec  Symb  Impo              Menu   !
  +-----------------------------------------------------------------------+ g
 Command => ____________________________________________________________
Enter-PF1---PF2---PF3---PF4---PF5---PF6---PF7---PF8---PF9---PF10--PF11--PF12---
      Help  Add   End         Save        Up    Down                    Menu
```

Job definition (master, part 2 (JCL definition).

```
 12.11.01                *** Entire Operations 4.1.1 ***              11:07:29
 Owner   GFR             Master Symbol Table GFR-ST2
 Network TESTNET10                                                   Run
 ---------------------------------------------------------------------------
 C Symbol            F P Value                       modified by
 _ NUM               N A 100000                      GFR      28.11.99 16:04
 _
 _
 _
 _
 _
 _
 _
 _
 _
 _
 _
 _
 ******************************** Bottom of Data ********************************
 C Copy   D Delete   M Modify
Enter-PF1---PF2---PF3---PF4---PF5---PF6---PF7---PF8---PF9---PF10--PF11--PF12---
      Help  Add   End         Save        Up    Down        Print
```

This screen shows the master symbol table GFR-ST2.

 Copyright © Software AG 2003

```
 12.11.01                *** Entire Operations 4.1.1 ***                11:08:34
 Owner   GFR              Master Symbol Table GFR-ST3
 Network SUB-1                                                     Run
 ---------------------------------------------------------------------------
 C Symbol            F P Value                        modified by
 _ CLASS             A A G                            GFR      04.08.97 16:07
 _ MSGCLASS          A A X                            GFR      04.08.97 15:05
 _
 _
 _
 _
 _
 _
 _
 _
 _
 _
 _
 _
 ******************************** Bottom of Data ********************************
 C Copy   D Delete   M Modify
Enter-PF1---PF2---PF3---PF4---PF5---PF6---PF7---PF8---PF9---PF10--PF11--PF12---
      Help  Add   End         Save        Up    Down        Print
```

This screen shows the master symbol table GFR-ST3.

```
 Edit SN.GFR.SOURCE(IEFBR14)-------------------------  ==> Member IEFBR14 saved
 ====>                                                   BLAETTERN===> CSR
 ***** ****************************** top of data ****************************
 00001 //IEFBR14  JOB  ,GFR,MSGCLASS=§MSGCLASS,CLASS=§CLASS
 00002 /* NUM=§NUM
 00003 //STEP1    EXEC PGM=IEFBR14
 ***** **************************** bottom of data ****************************

Enter-PF1---PF2---PF3---PF4---PF5---PF6---PF7---PF8---PF9---PF10--PF11--PF12---
      Help        End   Quit  Rfind Rchan Up    Down        Left  Right Curso
```

This screen shows the active JCL for TESTJOB11.

```
 Edit SN.GFR.SOURCE(IEFBR14)------------------------  ==> Member IEFBR14 saved
 ====>                                                  BLAETTERN===> CSR
 ***** ****************************** top of data ****************************
 00001 //IEFBR14  JOB  ,GFR,MSGCLASS=§MSGCLASS,CLASS=§CLASS
 00002 /* NUM=§NUM
 00003 //STEP1    EXEC PGM=IEFBR14
 ***** **************************** bottom of data ***************************



Enter-PF1---PF2---PF3---PF4---PF5---PF6---PF7---PF8---PF9---PF10--PF11--PF12---
      Help        End   Quit  Rfind Rchan Up    Down        Left  Right Curso
```

This screen shows the master JCL for TESTJOB11.

 Copyright © Software AG 2003

# Symbol Functions

A symbol function is a function on a symbol to be replaced in the JCL of a job. This allows symbols to be replaced dependent on a condition and allows the same JCL to be used for very different situations. Now symbols can be replaced much more flexibly than was the case with standard symbol replacement via symbol tables. You can use the symbol function which is integrated into Entire Operations or you can use user routines to define your own symbol functions.

This section covers the following topics:


- Symbol Function !D,?D
- Symbol Function !E, ?E
- Symbol Functions !MV, ?MV, !MM, ?MM
- Symbol Function !TIMN, ?TIMN
- Symbol Function !W,?W
- User Routines for Symbol Functions

# Symbol Function !D, ?D

This subsection covers the following topics:

- Syntax
- Examples
- Function
- Return Format
- Parameters
- Reference Objects
- Output Date Formats

---

The symbol function **D** (date) allows you to design dates in generated JCL more flexibly. This function calculates date values using the current date as a basis.

## Syntax

```
§!D<type|period|offset[|offset-unit][,edit-mask][,calendar]>
```

or

```
§!D<T[,edit-mask]>
```

or

```
§!D<yyyymmdd,edit-mask>
```

## Examples

```
§!D<AD-1>
```

```
§?D<WW+1,DDMMYY>
```

```
§!D<T,YYMMDD>
```

```
§!D<19991001,DD.MM.YY>
```

 Copyright © Software AG 2003

# Function

Calculation of date values from the current date.

# Return Format

See Output Date Formats.

# Parameters

The parameters are written one after the other without spaces.

| Syntax Element | Parameter | Explanation |
|---|---|---|
| type | T | current date |
| | A | all days (365 resp. 366 days a year) |
| | C | calendar days (days defined as working days in the calendar) |
| | S | schedule days |
| period | C | from current day |
| | W | week |
| | M | month |
| | 1...9 | one month back...nine months back |
| | Q | quarter |
| | Y | year |
| offset | | positive or negative number with prefix |
| offset-unit<br>(unit for the offset - optional, only evaluated for type A (all days)) | D | days (default) |
| | W | weeks |
| | M | months |
| | Q | quarters |
| | Y | years |

| Syntax Element | Possible Values | Examples |
|---|---|---|
| calendar | | See Reference Objects, Calendar. |
| yyyymmdd | | Date in format YYYYMMDD. |

# Reference Objects

| Syntax Element | Meaning |
|---|---|
| Owner | The owner of the network from which the function was called. |
| Calendar | If a calendar was specified explicitly, this is used for calendar calculations. This calendar must exist under the current owner. If it is not found there, it is searched for under the owner SYSDBA.<br>Otherwise, the calendar of the current schedule is used. If no calendar has been defined, all days are treated as working days.<br><br>**Subnetwork considerations**<br><br>● If the symbol function is invoked from within a subnetwork, the schedule or calendar of the top level (main calling network) is used for schedule or calendar calculation.<br>● Schedules or calendars defined in the subnetwork will be ignored in such calculations.<br><br>● It is not necessary to define schedules or calendars in a network used only as a subnetwork, because they are not relevant. |

If this parameter is missing or if an unknown format has been used, the date is returned in the format YYYYMMDD (example: 19991117).

# Output Date Formats

The output date formats described here can be used in the symbol functions **D** and **W.****

The default date output format is **YYYYMMDD** (e.g. 20020103).

| Format | Numeric Equivalent | Example |
|---|---|---|
| DD | 01 | 17 |
| DDMM | 02 | 1711 |
| DDMMYY | 03 | 171101 |
| DDMMYYYY | 04 | 17112001 |
| DD.MM.YY<br>DD#MM#YY | 05 | 17.11.01 |
| DD.MM.YYYY<br>DD#MM#YYYY | 06 | 17.11.2001 |
| DD/MM/YY | 07 | 17/11/01 |
| DD/MM/YYYY | 08 | 17/11/2001 |
| DD-MM-YY | 09 | 17-11-01 |
| DD-MM-YYYY | 10 | 17-11-2001 |
| JJJ | 38 | 330 |
| JJJYY | 39 | 33001 |
| JJJYYYY | 40 | 3302001 |
| MM | 11 | 11 |
| MMDD | 12 | 1117 |

 Copyright © Software AG 2003

| | | |
|---|---|---|
| MMDDYY | 35 | 111701 |
| MMYY | 13 | 1101 |
| MM.YY<br>MM#YY | 14 | 11.01 |
| MMYYYY | 15 | 112001 |
| MM.YYYY<br>MM#YYYY | 16 | 11.2001 |
| MM/DD/YY | 36 | 11/17/01 |
| MM-DD-YY | 37 | 11-17-01 |
| NN | 17 | Sa<br>(First 2 characters of name of weekday. This value depends on the current language setting of the Natural session.) |
| O | 18 | 6<br>(Number of weekday. This value depends on the Natural profile parameter DTFORM of the Natural session. Please refer to the Natural documentation.) |
| QQ | 34 | SA<br>(Like format **NN**, but in upper case.) |
| WW | 19 | 35<br>(Number of week) |
| WWYY | 41 | 5001<br>(Week and year) |
| WWYYYY | 42 | 502001<br>(Week and year) |
| YY | 20 | 01 |
| YYJJJ | 21 | 01330 |
| YYMM | 22 | 0111 |
| YYMMDD | 23 | 011117 |
| YYWW | 43 | 0150<br>(Year and week) |
| YYYY | 24 | 2001 |
| YYYYJJJ | 25 | 2001330 |
| YYYYMM | 26 | 200111<br>(Year and month) |
| YYYYMMDD | 27 | 20011117 |
| YYYYWW | 44 | 200150<br>(Year and week) |
| YYYY.MM.DD<br>YYYY#MM#DD | 28 | 2001.11.17 |
| YYYY/MM/DD | 29 | 2001/11/17 |
| YYYY-MM-DD | 30 | 2001-11-17 |

| | | |
|---|---|---|
| YY.MM<br>YY#MM | 45 | 01.11 |
| YY.MM.DD<br>YY#MM#DD | 31 | 01.11.17 |
| YY/MM/DD | 32 | 01/11/17 |
| YY-MM-DD | 33 | 01-11-17 |

 Copyright © Software AG 2003

# Symbol Function !E, ?E

This symbol function allows you to use date offset.

This subsection covers the following topics:

- Syntax
- Examples
- Function
- Return Format
- Parameters
- Edit Masks for Date Functions

---

## Syntax

```
§!E<date,offset[,edit-mask]>
```

## Examples

```
§!E<19991001,+28>
```

```
§!E<19991001,-7,F10>
```

## Function

A number of days is added to or subtracted from a given date in format YYYYMMDD.

## Return Format

Date in format YYYYMMDD

## Parameters

The parameters are separated by a comma.

| Syntax Element | Description |
|---|---|
| date | Date in format YYYYMMDD |
| offset | Positive or negative number with sign (+/-). Unit: days. |
| edit-mask | See the subsection Edit Masks for Date Functions (below). |

# Edit Masks for Date Functions

The edit mask can be entered either directly or with a format sign. The format sign can be used to shorten the function call.

| Format Sign | Format | Example |
|---|---|---|
| F1, 1 | DD | 17 |
| F2, 2 | DDMM | 1711 |
| F3, 3 | DDMMYY | 171101 |
| F4, 4 | DDMMYYYY | 17112001 |
| F5, 5 | DD.MM.YY | 17.11.01 |
| F6, 6 | DD.MM.YYYY | 17.11.2001 |
| F7, 7 | DD/MM/YY | 17/11/01 |
| F8, 8 | DD/MM/YYYY | 17/11/2001 |
| F9, 9 | DD-MM-YY | 17-11-01 |
| F10, 10 | DD-MM-YYYY | 17-11-2001 |
| F11, 11 | MM | 11 |
| F12, 12 | MMDD | 1117 |
| F13, 13 | MMYY | 1101 |
| F14, 14 | MM.YY | 11.01 |
| F15, 15 | MMYYYY | 112001 |
| F16, 16 | MM.YYYY | 11.2001 |
| F17, 17 | NN | Mi weekday (language-dependent) |
| F18, 18 | O | 3 number of the weekday |
| F19, 19 | WW | 35 number of the week |
| F20, 20 | YY | 01 |
| F21, 21 | YYJJJ | 00330 |
| F22, 22 | YYMM | 0111 |
| F23, 23 | YYMMDD | 011117 |
| F24, 24 | YYYY | 2001 |
| F25, 25 | YYYYJJJ | 2001330 |
| F26, 26 | YYYYMM | 200111 |
| F27, 27 | YYYYMMDD | 20011117 |
| F28, 28 | YYYY.MM.DD | 2001.11.17 |
| F29, 29 | YYYY/MM/DD | 2001/11/17 |
| F30, 30 | YYYY-MM-DD | 2001-11-17 |
| F31, 31 | YY.MM.DD | 01.11.17 |

 Copyright © Software AG 2003

| | | |
|---|---|---|
| F32, 32 | YY/MM/DD | 01/11/17 |
| F33, 33 | YY-MM-DD | 01-11-17 |
| F34, 34 | QQ | MI weekday (language-dependent) in upper case |

# Symbol Functions !MV, ?MV, !MM, ?MM

These symbol functions allow you to use multiple symbol values.

This subsection covers the following topics:

- Symbol Function MV
- Symbol Function MM

---

## Symbol Function MV

This symbol function allows you to use one single value of a multiple symbol.

- Syntax
- Examples
- Function
- Return Format
- Parameters
- Errors
- Reference Objects

### Syntax

```
§!MM<symbol>
```

### Examples

```
§!MM<ARRAY>
```

### Function

Get the maximum index of a multiple symbol.

### Return Format

Integer value.

### Parameters

The parameters are separated by a comma.

| Syntax Element | Description |
|---|---|
| symbol | Name of the multiple symbol |
| index | Index of the symbol value |

 Copyright © Software AG 2003

## Errors

In the following cases, 'Symbol not found' appears:

- multiple symbol not found
- Index missing
- Index not numeric
- Index too high

## Reference Objects

| Syntax Element | Description |
|---|---|
| Symbol table | The symbol table of the active job is always used. |

# Symbol Function MM

This symbol function allows you to get the maximux index of a multiple symbol.

- Syntax
- Examples
- Function
- Return Format
- Parameters
- Errors
- Reference Objects

## Syntax

```
§!MV<symbol,index>
```

## Examples

```
§!MV<ARRAY,1>
```

```
§?MV<ARRAY,§INDEX>
```

## Function

Accessing single occurrences of a multiple symbol.

## Return Format

Symbol value.

## Parameters

This function has only one parameter.

| Syntax Element | Description |
|---|---|
| symbol | Name of the multiple symbol |

## Errors

In the following cases, ’Symbol not found’ appears:

- multiple symbol not found

## Reference Objects

| Syntax Element | Description |
|---|---|
| Symbol table | The symbol table of the active job is always used. |

 Copyright © Software AG 2003

# Symbol Function !W ?W

This symbol function allows you to use date calculations relative to a calendar.

This subsection covers the following topics:

- Syntax
- Parameters
- Function
- Return Format

**Note:**
If the formula has an (even intermediate) result pointing to the 29th February of a non-leap-year, the resolution of the symbol function W will be stopped with an error message.

## Syntax

```
§!W<argument-symbol>
```

## Parameters

| Syntax Element | Possible Values | Description |
|---|---|---|
| argument-symbol | <formula><br>[,<edit-mask>]<br>[,<owner>]<br>[,<calendar>] | Symbol containing the four arguments as values. This symbol itself can be composed of symbols. The activation or submission escape character of the invoking active job is in effect. |
| Formula | <date><period><br><point><just-in-period><offset><br><unit><point><br><just-in-unit> | |
| date | YYYYMMDD<br>YYMMDD<br>DDMMYYYY<br>DDMMYY | Reference date in the valid Natural date format. MM, DD, [YY]YY can be separated by '/', '-' or '.'.<br><br>**Note:**<br>To avoid ambiguous date format interpretations, it is highly recommended to use a 4-digit year format.<br>If a 6-digit date cannot be interpreted uniquely, the symbol function returns with an error message like:<br><br>`040101A / MM is ambiguous` |

| | | |
|---|---|---|
| Period | **A**<br>**C**<br>**W**<br>**M**<br>**Q**<br>**S**<br>**Y** | Days<br>Working days<br>Week<br>Month<br>Quarter<br>Semester<br>Year<br><br>The limits of the date period are only left if <offset>*<unit> is longer (or equal to) the period. If <offset>*<unit> is shorter than the period, but would not match the beginning or end of the period, the first or the last (working) day of the period is returned. |
| Point | **F**<br>**L**<br>**S** | First day in period or unit.<br>Last day in period or unit.<br>Calculated date in period or unit. |
| just-in-period | **B**<br>**A** | If holiday, before.<br>If holiday, after. |
| offset | | Integer preceded by sign. |
| unit | Like <period> | Like <period>. |
| edit-mask | <type><format> | |
| type | **D**<date-format><br>**N**<number-format><br>**C**<name-format> | |
| date-format | | For further information, see the subsection Output Date Formats in the section Symbol Function !D, ?D. |
| number-format | <unit><period><br><supression><br><just> | |
| unit | Like<period> | Number of the <unit> in the <period>. This entails that the specified period must be larger than the unit. |
| period | Like<period> | |
| suppress | **Z** | Suppression of leading zeroes. |
| just | **R**<br>**L** | right justified<br>left justified |
| name-format | <unit><language><character><length> | |
| unit | **D**<br>**M** | Day<br>Month |
| language | **1**<br>**2**<br>**nn** | English<br>German<br>valid natural language code |
| character | **U**<br>**L** | Name only in upper-case letters.<br>Only first character in upper case. |
| length | | Display length. |

 Copyright © Software AG 2003

| | | |
|---|---|---|
| owner | | Owner of the reference calendar. |
| calendar | | Reference calendar for date calculation.<br>If the formula contains a calendar reference such as **C** for working day, B for working day before holiday or working day after holiday, the specification of a reference calendar is mandatory. |

# Function

Calculation of date values from current date.

# Return Format

For further information, see the subsection Output Date Formats in the section Symbol Function !D, ?D.

# User Routines for Symbol Functions

This subsection covers the following topics:

- Symbol Function Syntax
- Example: §!RANDOM<20,1>
- Example 1
- Example 2

---

Symbol Function Syntax

# Symbol Function Syntax

You can make your own symbol functions available via exits in Entire Operations.

Syntax for symbol functions:

```
§!function<parm1,...,parmn>
```

## Example: §!RANDOM<20,1>

You should take the following points into consideration for the above example:

- For a function to be recognized, an exclamation point (!, BS2000 ö) or a question mark (?) must always follow the escape character (here §).
- The parameter list is optional and is enclosed in angle brackets (<, >). No spaces are allowed between function name and parameter list.
- Parameters should be separated by commas.
- The total length of the function call may not be longer than 20.
- The symbol functions must be located in the SYSEOR library.
- The parameters are passed to the function in an extra field.
- The Entire Operations Monitor performs logging of symbol replacement. Additional logging may also be performed.
- After successful replacement, the symbol value is written to the active symbol table of the job. The symbol function is **not** called for subsequent replacements. Instead, the value is read from the active table.

The names of the symbol function exits begin with SX. Since the length of the names of Natural objects is limited to **8** characters, the function name (without !) can have a maximum length of **6** characters.

## Example 1

The function !RANDOM is handled in the routine SXRANDOM.

The symbol function exists are called with the parameter list NOPXPL-A, so the first line of the exit should be:

```
DEFINE DATA PARAMETER USING NOPXPL-A
```

 Copyright © Software AG 2003

Meaning of the parameters in NOPXPL-A:

| Parameter | Format | Use | | |
|---|---|---|---|---|
| P-CALL-PLACE | (A03) | (in) | Constant SFX. | |
| P-RC | (N04) | (out) | Return code: | |
| | | | **0** | Function **ok**. |
| | | | **4511** | Symbol not found. |
| P-RT | (A66) | (out) | Return text (can be used for exact error description, optional). | |
| P-OWNER | (A10) | (in) | Network owner. | |
| P-NETWORK | (A10) | (in) | Job network. | |
| P-JOB | (A10) | (in) | Job. | |
| P-RUN | (P13) | (in) | Run number. | |
| P-EXECUTION-NODE | (N03) | (in) | Entire System Server execution node. | |
| P-SYMBOL-TABLE | (A10) | (in) | Name of the defined symbol table. | |
| P-SYMBOL | (A20) | (in) | Function parameter, without brackets. | |
| P-SYMBOL-VALUE | (A54) | (out) | Symbol value (function result). | |

**Notes:**

1. In the field P-SYMBOL, **only the function parameters** (without brackets) are transferred. The function names can be identified from the Natural variable *PROGRAM.
2. Any field from NOPXPL-A not listed above may not be used, because its contents are invalid.

# Example 2

- Symbol Function
- Master JCL
- Active JCL
- Active Symbol Table

## Symbol Function

```
* SYMBOL FUNCTION EXIT EXAMPLE
* SXQS<PARM1>
* CROSSFOOTING OF THE PARAMETER
* ------------------------------------------------------------
DEFINE DATA PARAMETER USING NOPXPL-A
LOCAL
1 #I   (I02)
1 #N   (I02)
1 #SUM (I02)
1 #A   (A01)
END-DEFINE
* ------------------------------------------------------------
RESET #SUM
F1. FOR #I = 1 TO 20
  #A := SUBSTR (P-SYMBOL,#I,1)
  IF #A IS (N1)
    #N := VAL(#A)
    ADD #N TO #SUM
  END-IF
END-FOR    /* F1.
P-SYMBOL-VALUE := #SUM
RESET P-RC P-RT
END
```

## Master JCL

```
//SN000001 JOB ,SN,CLASS=K
//IEFBR14  EXEC PGM=IEFBR14
//*
//* +!D<AQ+1>
//* §!D<AQ+1>
//*
//* +!QS<4711>
//* §!QS<4711>
//*
//* +!QS<+*DATE>                NESTED SYMBOLS
//* +!QS<§*DATE>                NESTED SYMBOLS
//* §!QS<§*DATE>                NESTED SYMBOLS
//*
//* +!QS<+!D<AM-1>>             NESTED FUNCTIONS
//* +!QS<§!D<AM-1>>             NESTED FUNCTIONS
//* §!QS<§!D<AM-1>>             NESTED FUNCTIONS
//*
```

## Active JCL

 Copyright © Software AG 2003

```
//SN000001 JOB ,SN,CLASS=K
//IEFBR14  EXEC PGM=IEFBR14
//*
//* +!D<AQ+1>
//* 19990101
//*
//* +!QS<4711>
//* 13
//*
//* +!QS<+*DATE>                 NESTED SYMBOLS
//* +!QS<11/01/96>               NESTED SYMBOLS
//* 18                           NESTED SYMBOLS
//*
//* +!QS<+!D<AM-1>>              NESTED FUNCTIONS
//* +!QS<19990131>               NESTED FUNCTIONS
//* 30                           NESTED FUNCTIONS
//*
```

## Active Symbol Table

```
Symbol            F A Wert                          modified by
!D<AM-1>          A E 19990131                      EORMON   11.01.96 17:25
!D<AQ+1>          A E 19990101                      EORMON   11.01.96 17:25
!QS<11/01/96>     A E 18                            EORMON   11.01.96 17:25
!QS<19960131>     A E 30                            EORMON   11.01.96 17:25
!QS<4711>         A E 13                            EORMON   11.01.96 17:25
X                 A E x                             SN       10.11.95 13:13
```

# Symbol Function !TIMN, ?TIMN

The symbol function TIMN allows to use ’constant’ time values in multiple timestamp replacements.

This subsection covers the following topics:

- Syntax
- Examples
- Function
- Return Format
- Parameters
- Reference Objects

---

## Syntax

```
§!TIMN<parm1>
```

## Examples

```
§!TIMN<A>
```

and

```
§?TIMN<B>
```

## Function

The symbol function TIMN allows you to use ’constant’ time values in multiple timestamp replacements.

## Return Format

A time stamp, in the format of the Natural system variable *TIMN:

```
Format: A7
Content: HHIISST
```

where T = tenths of seconds.

## Parameters

| Parameter | Explanation |
|---|---|
| parm1 | The parameter is a dummy.<br>But note that all invokings with the same parameter create the same time value (if the same active symbol table is being used). |

 Copyright © Software AG 2003

# Reference Objects

None.

# Predefined Symbols

This section covers the following topics:

- List of Predefined Symbols
- Reserved Symbols with Special Meaning

## List of Predefined Symbols

The following symbols can be used without defining them in a symbol table:

| Symbol | Format | Description | | | | | | | | |
|---|---|---|---|---|---|---|---|---|---|---|
| *DATD | A8 | Date in the format DD.MM.YY. | | | | | | | | |
| *DATE | A8 | Date in the format DD/MM/YY. | | | | | | | | |
| *DATG | A15 | Date in the format DDmonthYY. | | | | | | | | |
| *DATI | A8 | Date in the format YY/MM/DD. | | | | | | | | |
| *DATJ | A5 | Date in the format YYDDD (Julian). | | | | | | | | |
| *DATN | N8 | Date in the format YYYYMMDD. | | | | | | | | |
| *DATU | A8 | Date in the format MM/DD/YY. | *DAT4J | A7 | Date in the format YYYYDDD (Julian). | | | | | |
| *TIME | A10 | Time of day in the format HH:MM:SS. | | | | | | | | |
| *TIMN | P13 | Time of day in the format HHMMSST. | | | | | | | | |
| P-OWNER | A10 | Owner of the network. | | | | | | | | |
| P-NETWORK | A10 | Network. | | | | | | | | |
| P-RUN | N5 | Run number of the network. | | | | | | | | |
| P-JOB | A10 | Job. | | | | | | | | |
| P-NADIR | A250 | Directory for temporary files for this network (UNIX and Windows NT). If the job is executed under Unix, this field also contains the Unix group from Version 3.1.1. | | | | | | | | |
| P-MUL | A8 | User who made last change (in lower case). | | | | | | | | |
| P-MUU | A8 | User who made last change (in upper case). | | | | | | | | |
| P-SUL | A8 | Job start user ID (in lower case). | | | | | | | | |
| P-SUU | A8 | Job start user ID (in lower case). | | | | | | | | |
| P-SUBMIT-ID | A8 | BS2000 user ID, under which the job was started (BS2000 only). | | | | | | | | |

 Copyright © Software AG 2003

| | | | | | | | | | | |
|---|---|---|---|---|---|---|---|---|---|---|
| P-SYSOUT | A54 | Name of the sysout file.<br>This variable is dependent upon the operating system, in which the job is executed:<br>**BS2000**: available any time after the activation.<br>**OS/390, VSE/ESA**, etc: not available. The value is set to '...'.<br>**UNIX**: available any time after the activation.<br>**Windows**: available any time after the activation. The file name is returned in Unix syntax. | | | | | | | | |
| P-DATE | A8 | Execution date in the format YYYYMMDD. Date of previous day is transmitted, if the end time of the previous production day has not yet been reached. | | | | | | | | |
| P-NODE | N3 | Execution node. | | | | | | | | |
| P-EXEC-NODE | N3 | Execution node. | | | | | | | | |
| P-SYMBOL-TABLE | A10 | Symbol table. | | | | | | | | |

Symbols for multiple, parallel activations:

| Symbol | Format | Description |
|---|---|---|
| P-SUFFIX | A10 | The job name suffix, if multiple, parallel job activation is in use. You can find detailed information about multiple, parallel job activation in the section Job Maintenance. |
| P-MPA | A50 | The full current value of the symbol containing the job name suffix, if multiple, parallel job activation is in use. To redefine this field, code:<br>`§ 1 P-MPA (A50)`<br>`§ 1 REDEFINE P-MPA`<br>`...`<br>`#GET-SYMBOL P-MPA` |
| P-MPI | N03 | The numerical index of the value of the multiple symbol used for a multiple parallel activation. |

Symbols, which are available in subnetworks and recovery jobs. These symbols have the value of a blank, unless they are used in a sub-network or a recovery job.

| Symbol | Format | Description |
|---|---|---|
| P-C-OWNER | A10 | Owner of the calling job. |
| P-C-NETWORK | A10 | Owner of the calling job. |
| P-C-RUN | P13 | Run number of the calling job. |
| P-C-JOB | A10 | Name of the calling job. |
| P-C-SUFFIX | A10 | The suffix value of the job which **invoked the sub-network** where the symbol is used. |
| P-C-MPA | A50 | The full current value of the symbol, containing the suffix of the job which **invoked the sub-network**, if multiple, parallel job activation is in use **in the calling network**. To redefine this field, code:<br>`§ 1 P-C-MPA (A50)`<br>`§ 1 REDEFINE P-C-MPA`<br>`...`<br>`#GET-SYMBOL P-C-MPA` |

# Reserved Symbols with Special Meaning

- UNIX and Windows
- Mainframe Platforms
- Special Symbol Value

## UNIX and Windows

| Symbol | Format | Description |
|---|---|---|
| CMDLINE-<job> | A80 | Command line parameter for UNIX shell scripts and Windows .BAT files and programs which are can be executed directly under Windows. Several parameters, separated by blanks, can be contained in this symbol. <job> is to be replaced by the job name. |

## Mainframe Platforms

| Symbol | Format | Description |
|---|---|---|
| SYSOUT-NODE-GLOBAL | N3 | (Only in table SYSDBA/A)<br>If this sysout exists and contains a valid Entire System Server node number in the range of 1-255, sysout file copies for Entire Output Management are created on this node. |
| JCL-NODE | N3 | If this symbol is found during job activation, this node is used as JCL node for the active job. |
| SUBMIT-NODE | N3 | If this symbol is found during job activation, this node is used as job start node for the active job. |
| SYSOUT-NODE | N3 | If this symbol is found during job activation, this node is used as sysout node for the active job. This symbol supersedes SYSOUT-NODE-GLOBAL. |

The symbols JCL-NODE, SUBMIT-NODE and SYSOUT-NODE are sought for in the following symbol tables:

 Copyright © Software AG 2003

- first in the active symbol table of the job;
- if it is not found: in the active symbol table of the network;
- if it is not found and if it is in the subnetwork: in the active symbol table of the calling job of type NET;
- if it is not found: in the active symbol table of the calling network.

The last two steps may be repeated recursively ascending.

## Special Symbol Value

M or MASTER: The corresponding node is always taken from the master definition of the job.

# Working with Mailboxes

This section covers the following topics:

- Displaying Mailbox Messages
- Access to Messages
- Message Types
- Origin of Mailbox Messages
- Group Mailbox
- SYSDBA Mailbox
- User Mailbox
- Clearing Mailboxes

---

## Displaying Mailbox Messages

- Remarks
- Sort Order of Mailbox Messages

If a mailbox assigned to you has any entries, the message **You have Mail** appears in the top left-hand corner of your screen:

```
EOR1500 - You have Mail
 20.11.01                *** Entire Operations 4.1.1 ***              10:16:27
 Owner SN                           Main Menu                   User ID GHH
 ------------------------------------------------------------------------------

      Main Menu                                DC Solutions

   1  Network and Job Maintenance         20  Entire Event Management (V132)
   2  Active Job Networks                 21  Entire Output Management (V134)
   3  Calendar Maintenance
   4  Log Information
   5  Symbol Tables
   6  System Administrator Services
   7  Reports                                  Applications
   8  Import/Export
   9  Help                                30  sysmain





 Command => ____________________________________________________________
Enter-PF1---PF2---PF3---PF4---PF5---PF6---PF7---PF8---PF9---PF10--PF11--PF12---
      Help        End                                             Owner Mail
```

**To view the contents of the mailbox(es)**

1. Type MAIL on the command line or press PF12 (Mail) on the Main Menu.
2. Press Enter.

   The Mailbox - Messages and Requests screen appears:

 Copyright © Software AG 2003

```
 20.11.01                *** Entire Operations 4.1.1 ***                10:41:09
 User GHH                Mailbox - Messages and Requests
 ---------------------------------------------------------------------------
 Cmd Date Time  Mailbox    Description
    ----- 00:00
 _  10.07 09:15 GHH        NETWORK DEMO-NET ACTIVATED
 _                         ==> SN / DEMO-NET / 191 / MESSAGE
 _  10.07 13:21 GHH        PAPER-READY - 549  - RUN not found
 _  10.07 13:02 GHH        PAPER-READY - 550  - RUN not found                 1
 _  10.07 09:15 GHH        NETWORK DEMO-NET ACTIVATED
 _                         ==> SN / DEMO-NET / 193 / MESSAGE
 _  10.07 15:34 GHH        Symbol Prompting E60-FLOW Run 530 (OVER START TIME)
 _  10.07 15:35 GHH        Symbol Prompting E60-FLOW Run 531 (in 1:12 hours)   2
 _  11.07 09:32 GHH        NETWORK DEMO-NET ACTIVATED
 _                         ==> SN / DEMO-NET / 194 / MESSAGE
 _  11.07 09:15 GHH        NETWORK DEMO-NET ACTIVATED
 _                         ==> SN / DEMO-NET / 195 / MESSAGE                  3
 _
 ************************************ m o r e ***********************************
 Sequence   : A (A/D)
 Mark lines with any character for specific actions.
 Command => ____________________________________________________________
Enter-PF1---PF2---PF3---PF4---PF5---PF6---PF7---PF8---PF9---PF10--PF11--PF12---
      Help        End         Save        Up    Down                    Menu
```

## Remarks

[1] PAPER-READY - 549 - RUN not found : example of Waiting for Condition.

[2] Symbol Prompting E60-FLOW Run 530 (OVER START TIME): example of Symbol Prompting.

[3] NETWORK DEMO-NET ACTIVATED ==> SN / DEMO-NET / 195 / MESSAGE: example of Information Message. See the subsection Message Types for explanations.

## Sort Order of Mailbox Messages

You may request the mailbox messages in ascending or descending order.
Enter in the field 'Sequence':

**A** = Ascending order. Earliest messages come first.
**D** = Descending order. Latest messages come first.

# Access to Messages

- Column Headings
- Line Commands
- Special PF Keys

You are allowed to display the contents of all mailboxes to which you are linked. The link is defined in the Entire Operations user definition.

## Column Headings

The following table explains the column headings for the data listed on the Mailbox - Messages and Requests screen:

| Column | Description |
|---|---|
| Cmd | One-character line command input field. Mark with any character. |
| Date/Time | Date and time when message was sent. You can enter starting date and time in the input fields directly below the column headings. |
| Mailbox | Mailbox to which the message was sent. |
| Description | Short text of the message. More details can be made available by using line commands |

## Line Commands

**To perform a specific function, like symbol prompting or setting a condition**

- Mark the Cmd field in the appropriate line with any character and press Enter.

  The function you can perform depends on the message type.

  For more information, see the subsection Message Types beginning below.

## Special PF Keys

| Key | Name | Function |
|---|---|---|
| PF7 | Up | Scroll list of messages towards the top. |
| PF8 | Down | Scroll list of messages towards the bottom. |

# Message Types

- Waiting for Condition
- Symbol Prompting
- Information Messages

The numbers below refer to the messages (1, 2, 3) in the figure Mailbox - Messages and Requests screen.

## Waiting for Condition

| |
|---|
| PAPER-READY - 549 - RUN not found |

A message of this type means that a scheduled network or job is waiting for a condition to be set.

**To set the condition**

- Mark the Cmd field of this line with any character. Press Enter.

  This function is used to perform manual actions within a network.

## Symbol Prompting

| |
|---|
| Symbol Prompting E60-FLOW Run 530 (OVER START TIME) |

 Copyright © Software AG 2003

A message of this type means that a scheduled network or job is waiting for symbols to be entered or modified.

**To perform symbol prompting**

1. Mark the Cmd field of this line with any character. Press Enter.

   The Symbol Prompting screen appears.

   **Note:**
   Symbol prompting via mailbox is only used for automatic jobs started by schedule and cannot be used for jobs started interactively. Definition of the recipient mailbox for symbol prompting messages is described in the subsection Specifying Recipients for Network Messages in the section Network Maintenance.

   For further information on symbol prompting, see the subsection Symbol Prompting. in the section Symbols.

   The message also displays the time until the next network start (in hours), or, if the network has exceeded its start time, displays the message OVER START TIME.

2. If this is the case, you are prompted for a new start time:

```
 20.11.01               *** Entire Operations 4.1.1 ***              13:32:53
 User GHH               Mailbox - Messages and Requests
 ---------------------------------------------------------------------------
 Cmd Date Time  Mailbox    Description
 _  11.07 09:15 GHH        NETWORK DEMO-NET ACTIVATED
 _                         ==> SN / DEMO-NET / 191 / MESSAGE
 _ +-------------------------------------------------------------------+
 _ !                                                                   !
 _ !      Owner EXAMPLE       Network E60-FLOW      Run 530            !
 _ !                                                                   !
 _ !  The planned start time was in the past ==> 20.11.01  15:00       !TIME)
 _ !  You can enter a new start time         ==> 20.11.01  15:00       !rs)
 _ !                                                                   !
 _ !  or cancel the activation with PF6                                !
 _ !                                                                   !
 _ !  PF3  End    PF6  Cancel                                          !
 _ +-------------------------------------------------------------------+
 ********************************** m o r e  **********************************
 Mark lines with any character for specific actions.

 Command => ____________________________________________________________
Enter-PF1---PF2---PF3---PF4---PF5---PF6---PF7---PF8---PF9---PF10--PF11--PF12---
      Help        End         Save        Up    Down                   Menu
```

3. Enter the new start time.
4. Press Enter to confirm the new start time. The new start time will be entered as the earliest start time in all active network jobs. Alternatively, you can cancel the activation by pressing PF6 (Cancel).

## Information Messages

| NETWORK DEMO-NET ACTIVATED ==> SN / DEMO-NET / 195 / MESSAGE |
|---|

This is an information message.

**To delete the message from the list on the Mailbox - Messages and Requests screen**

1. Mark the Cmd field of this line with any character. Press Enter.

   A window opens.

2. Delete the message by entering **Y** and pressing Enter.

# Origin of Mailbox Messages

Messages can also be triggered by any other events detected by the Entire Operations Monitor:

1. If a condition is defined **dependent on mailbox**, the Entire Operations Monitor sends a request to the assigned mailbox. For further information, see the subsection Input Condition Depending on Mailbox in the section Job Maintenance.
2. If symbol replacement is defined as **controlled by a user routine**, and an error occurs, the request for symbol prompting is sent to the assigned mailbox. For further information, see the subsections Symbol Modification without Prompting in the section Symbols and Specifying Recipients for Network Messages in the section Network Maintenance.
3. Depending on the result of an end-of-job check, messages can be sent to Entire Operations users. Messages can also be sent to a particular mailbox. For further information, see the subsection Message Switching in the section End-of-Job Checking and Actions.

# Group Mailbox

All users linked to a group mailbox have access to the same range of messages. If a message is handled by any of these users, it no longer appears in anyone’s mailbox.

# SYSDBA Mailbox

All generated messages and requests, for which no user is defined, are sent to the SYSDBA mailbox, which is accessible to the owner SYSDBA.

# User Mailbox

This kind of mailbox is available to only one user. Its name is identical to the user ID of the Entire Operations user. The user mailbox does not have to be defined or explicitly assigned to the user.

# Clearing Mailboxes

Mailbox entries are cleared in accordance with the maximum length of time specified in the Entire Operations default settings for long-term logging. For further information, see the section System Administrator Services, subsection Mailbox Maintenance in the Entire Operations Administration Documentation.

 Copyright © Software AG 2003

# Common Objects

This section covers the following topics:

- Message Receiver Table
- E-Mail on Mainframes
- E-Mail on UNIX Systems

---

## Message Receiver Table

- Field Descriptions: Message Receivers
- Message Destination Types
- Special PF Keys

Message receiver tables are used in several contexts. Their functionality is always the same. Therefore, they are only described once for all usages in this documentation.

The screen for the receiver definitions looks as follows:

---

### Field Descriptions: Message Receivers

The input fields of the Message and Message Receivers window are described in the following table:

| Field | Description |
|---|---|
| Text | Text of message to be sent if the associated event occurs.<br><br>If the text is not modifiable on the map, the effective message text will be generated for the event automatically by Entire Operations.<br>If the message contains an activation escape character, text replacement is performed from the active symbol table. |
| Destination | Enter CONSOLE to send the message to the operator console (mainframes only).<br><br>For Con-nect: enter a valid Con-nect user ID.<br><br>In OS/390 and VSE/ESA: enter the user ID of a TP system user.<br><br>In BS2000/OSD: enter a terminal name.<br><br>In UNIX: enter a UNIX user ID valid in the UNIX environment of the addressed server. This is automatically converted to lower case. The message is sent with the UNIX mail function.<br><br>This field can also contain a symbol. This allows you to define a longer destination as well, for example an e-mail address.<br>If e-mail addresses are to be defined (in an EBCDIC character set) on the mainframe, the string "(a)" must be used instead of "@". |
| Destination Type | Please see Message Destination Types for a detailed description. |
| Node | Enter the Entire System Server node, by which the message is to be sent.<br>This is not necessary for messages to Con-nect.<br><br>Default: the execution node of the job. |

## Message Destination Types

 Copyright © Software AG 2003

| | |
|---|---|
| =EMAIL | Sends the message by email to any receiver in the Intranet or Internet.<br><br>Since the receiver field is usually too short for an email address, it is recommended to put a symbol into the destination field, preceded by the activation escape character.<br>The effective email address must be defined as symbol value in the symbol table used.<br><br>The "at" sign (@) must be entered (in the EBCDIC character set) as (a) on mainframes, for example: user(a)any.host.<br><br>For UNIX, see also Email on UNIX Systems.<br><br>As Windows does not have a built-in sendmail command, a command line tool must be specified in the node definition.<br><br>This destination type is currently not available for BS2000/OSD and VSE/ESA.<br><br>For OS/390, some special definitions must be made made for the ESY node which is used for message sending. |
| =MAILBOX | Sends the message to the mailbox specified in "Destination". |
| =COMPLET | Explicitly to a Com-plete user<br>(OS/390 only). |
| =TSO | Explicitly to a TSO user<br>(OS/390 only). |
| =CONSOLE | Sends message to the operator console<br>(mainframes only). |
| other | BS2000/OSD:<br>The processor name related to the BS2000/OSD terminal name to be specified in the "Destination" column. |

## Special PF Keys

| | |
|---|---|
| PF9 | **Delete**<br>Delete **all** message receiver definitions.<br>Use this function with care. |

# E-Mail on Mainframes

## OS/390, VSE/ESA

1. The sender name now contains ’EOR Monitor’ for all sending platforms.
2. An additional line with the NOP event text is added to the mail.

All further changes can be done in NOP, when the future ESY view for e-mail sending will be available.

**Usage Note:**
Before you use an OS/390 ESY node for e-mail sending, you must invoke the node definition in NOP, and enter the line command ’S’ (specials) for that node. For further information, please refer to the subsection Special Definitions for a Node (OS/390) in the section Definition of Nodes of the Entire Operations Administration Documentation.

’Mail Destination’ and ’Mail Sysout Class’ must be defined.

### BS2000/OSD

Currently the e-mail sending via BS2000 / OSD nodes is not supported. This feature will be added in a future Entire Operations version.

## E-Mail on UNIX Systems

To be able to send E-Mail on UNIX machines from Entire System Server, the following mail programs must be available there:

| | |
|---|---|
| **AIX** | mail |
| **Tru64** | sendmail |
| **others** | rmail |

 Copyright © Software AG 2003

# Reporting

This section covers the following topics:


- Reporting Overview
- New Reporting Documentation
- General Information
- Job Logs
- Network and Job Accounting Data
- Network Description
- Network Job Flow Display
- Jobs Schedule
- Network Start Summary
- Network Schedule Overview
- Activation Overview
- Producing Reports in Batch
- Cross-References

# Reporting Overview

This subsection covers the following topics:

- Entire Operations Reporting Facility (New Reports)
- Entire Operations Reporting Facility (Old Reports)
- Invoking the Old Reports

---

## Entire Operations Reporting Facility (New Reports)

- Special PF Key

With Entire Operations Version 4.1.1, a new reporting facility has been introduced. The new menu is shown below.

 Copyright © Software AG 2003

```
 06.11.01              *** Entire Operations 4.1.1 ***              16:56:54

Owner EXAMPLE                   Reporting Menu               User ID UKSJU

-------------------------------------------------------------------------------



     Reporting Menu



  1  Log - Terminated Jobs

  2  Log - Abended Jobs

  3  Log - Jobs not started

  4  Accounting Data

  5  Network Description (short)

  6  Network Description (detailed)

  7  Network Description (with JCL)

  8  Network Job Flow Display

  9  Schedule of Jobs

 10  Network Start Summary

 11  Network Schedule Overview

 12  Activation Overview




 Command => ____________________________________________________________
Enter-PF1---PF2---PF3---PF4---PF5---PF6---PF7---PF8---PF9---PF10--PF11--PF12---
      Help        End   Old                                          Menu
```

## Special PF Key

| Key | Name | Function |
|---|---|---|
| PF4 | Old | Access the report facility provided with previous version of Entire Operations. |

For further information about New Reporting, please refer to New Reporting Documentation.

# Entire Operations Reporting Facility (Old Reports)

The Entire Operations Reporting facility makes a number of different reports available. They include information at the job and event level, information on job network definitions and schedules and overviews of schedules and planned activations.

# Invoking the Old Reports

- Special PF Key

**To invoke the old reports**

1. Select the Reports option on the Entire Operations Main Menu.
2. Press **PF4** Old.

   The Old Reporting Menu appears:

```
 02.11.01               *** Entire Operations 4.1.1 ***               16:13:42
 Owner EXAMPLE                    Reporting Menu                User ID GHH
 ------------------------------------------------------------------------------

      Reporting Menu

   1  Log - Terminated Jobs
   2  Log - Abended Jobs
   3  Log - Jobs not started
   4  Accounting Data
   5  Network Description (short)
   6  Network Description (detailed)
   7  Network Job Flow Display
   8  Schedule of Jobs
   9  Network Activation Summary
  10  Network Schedule Overview




 Command => ____________________________________________________________
Enter-PF1---PF2---PF3---PF4---PF5---PF6---PF7---PF8---PF9---PF10--PF11--PF12---
      Help        End   New                                            Menu
```

   The available options on the old Reports menu are described in the following subsections.

   Most reports are available not only online, but also in batch. For further information, see Producing Reports in Batch.

## Special PF Key

| Key | Name | Function |
|---|---|---|
| PF4 | New | Return to the New Reporting Menu. |

 Copyright © Software AG 2003

# New Reporting Documentation

This section covers the following topics:


- General Information
- Job Logs
- Network and Job Accounting Data
- Network Description
- Network Job Flow Display
- Schedule of Jobs
- Network Start Summary
- Network Schedule Overview
- Activation Overview
- Producing Reports in Batch
- Cross-References


---

## General Information


- Selection
- Special PF Keys
- Security
- Batch Execution


This section applies to all reporting options.

### Selection

Selection of data is handled in a similar way for all reports. After selecting the report option, (and for Network Schedule Overview and Activation Overview, the report-specific selection criteria), you receive the following selection window:

```
 06.11.01              *** Entire Operations 4.1.1 ***              17:07:43

 Owner EXAMPLE +-------------------------------------------------------------+

 ------------- !                                                             !

               !  Log - Terminated Jobs                                      !

     Reportin !                                                              !

               !  Owner......: __________    (Blank for all, * for selection  !

   1  Log - Te !  Network....: __________     or * and PF4 to process all     !

   2  Log - Ab !  Job........: __________     matching objects)               !

   3  Log - Jo !                                                             !

   4  Accounti !                                                             !

   5  Network  !  Destination: 1                                             !

   6  Network  !     1 - Screen  2 - Printer  3 - PC  4 - PC-CSV              !

   7  Network  !                                                             !

   8  Network  ! Enter-PF1---PF2---PF3---PF4---PF5---PF6---PF7---PF8---PF9--- !

   9  Schedule !       Help        End   Apply Accpt                         !

  10  Network  +-------------------------------------------------------------+

  11  Network Schedule Overview

  12  Activation Overview




 Command => 1_____________________________________________________________
Enter-PF1---PF2---PF3---PF4---PF5---PF6---PF7---PF8---PF9---PF10--PF11--PF12---
      Help        End   Old                                             Menu
```

Where you can select:

- Owner
- Network
- Job (only reports 1, 2, 3 and 4)
- Report Destination

Owner, Network and Job may be terminated with wildcard characters:

| Wildcard Character | Meaning |
|---|---|
| * | Only select objects for which the name begins with the given prefix. |
| > | Only select objects with a name greater than the given value. |
| < | Only select objects with a name less than the given value. |

 Copyright © Software AG 2003

This allows extremely flexible reporting. On the other hand, it allows you to formulate requests that will cause very many Adabas calls. For this reason, it is possible to disallow wildcard report selection for non-administrator users (see User Profiles). By default, users of type A and O are allowed to use wildcard selection; users of type G are not. It is not possible to disallow it for users of type A.

You can also choose where the report is to be directed:

1. (the default) will write the results to the screen
2. will write the results to Printer 1 (which must be defined appropriately)
3. will write the results to the PC (using Entire Connection and Printer 7)
4. will write the results to a PC work file (using Entire Connection and Work File 7) in comma-separated-variable format, suitable for importing into a spreadsheet package. This destination is only allowed for reports 1, 2, 3, 4, 9, 11 and 12.

When you are satisfied with your selection, press PF5 to move on to the date/time/run range selection window (where applicable) or to produce the report. If you have used the * wildcard for Owner, Network or Job you will then be prompted to select which Owner/Network/Job you are interested in. However, if you press PF4 rather than PF5, you will not be prompted instead the report will include all objects which match your selection criteria.

## Special PF Keys

| Key | Name | Function |
|---|---|---|
| PF3 | End | Return to Reporting Menu. |
| PF4 | Apply | Confirm selection criteria, including * wildcards. |
| PF5 | Accpt | Confirm selection criteria. If any object name has an *, you will be prompted with a list of matching objects, from which you may select one and press PF5 again. |

## Security

Administrator users (and reports run in batch) may report on any network in any owner. Non-administrator users, however, will only receive information on networks to which they have read access. A user is considered to have read access if:

1. The user is linked to owner SYSDBA.
2. The user is linked to the Network owner.
3. Access to the network has been explicitly granted to the user.

## Batch Execution

All new reports may be executed in batch, as well as online. In batch, there are no security restrictions and the only supported destination is Printer 1. Batch execution is described in more detail below.

(Explanations of individual reports are mostly the same as the old reporting descriptions, except for the screens.)

# Job Logs

First screen:

```
 06.11.01               *** Entire Operations 4.1.1 ***               17:53:53

 Owner UKSJU   +-------------------------------------------------------------+

 ------------- !                                                             !

               !  Log - Terminated Jobs                                      !

     Reportin !                                                              !

               !  Owner......: Example___    (Blank for all, * for selection  !

   1  Log - Te !  Network....: E5*_______     or * and PF4 to process all     !

   2  Log - Ab !  Job........: __________     matching objects)               !

   3  Log - Jo !                                                             !

   4  Accounti !                                                             !

   5  Network  !  Destination: 1                                             !

   6  Network  !     1 - Screen  2 - Printer  3 - PC  4 - PC-CSV              !

   7  Network  !                                                             !

   8  Network  ! Enter-PF1---PF2---PF3---PF4---PF5---PF6---PF7---PF8---PF9--- !

   9  Schedule !       Help        End   Apply Accpt                         !

  10  Network  +-------------------------------------------------------------+

  11  Network Schedule Overview

  12  Activation Overview




 Command => 1_____________________________________________________________
Enter-PF1---PF2---PF3---PF4---PF5---PF6---PF7---PF8---PF9---PF10--PF11--PF12---
      Help        End   Old                                              Menu
```

Will produce a list of all terminated jobs for Networks beginning E5 in owner EXAMPLE.

Second screen:

 **Copyright © Software AG 2003**

```
 06.11.01               *** Entire Operations 4.1.1 ***               17:53:53
 Owner UKSJU   +-------------------------------------------------------------+
 ------------- !                                                             !
               !  Log - Terminated Jobs                                      !
     Reportin  !                                                             !
               !  Owner......: Example___    (Blank for all, * for selection  !
   1  Log - Te !  Network....: E5*_______     or * and PF4 to process all     !
   2  Log - Ab !  Job........: __________     matching objects)               !
   3  Log - Jo !                                                             !
   4  Accounti !                                                             !
   5  Network  !  Destination: 1                                             !
   6  Network  !     1 - Screen  2 - Printer  3 - PC  4 - PC-CSV              !
   7  Network  +-----------------------------------------------------+        !
   8  Network  !                                                     ! -PF9--- !
   9  Schedule !  Log - Terminated Jobs                               !        !
  10  Network  !             Date / Run Number Selection             ! --------+
  11  Network  !                                                     !
  12  Activati !  From Date 06.11.01  00:00   to 06.11.01  23:59     !
               !  From Run  1____             to 99999               !
               !                                                     !
 Command => 1_ !  PF3  End                                           ! __
Enter-PF1---PF +-----------------------------------------------------+ --PF12---
      Help        End   Old                                              Menu
```

Here you may select date, time and run number ranges.

The reporting program gives a running total of how many log records it has had to read to satisfy your request and displays the results:

```
                                                    Entire Operations Log Report
 ------------------------------------------------------------------------------


   Owner      Network    Job        Run   Date     Time  Message

   ---------- ---------- ---------- ----- -------- ----- -----------------------


   EAMPLE     E52-LOGRES E52-J01      205 06.11.01 01:00 Ended ok


  ********************************* Bottom of Data ******************************

 Enter-PF1---PF2---PF3---PF4---PF5---PF6---PF7---PF8---PF9---PF10--PF11--PF12---
                   End                                       Left  Right Menu
```

**Note:**
Column headings and PF keys have the same meanings as for the old reports.

# Network and Job Accounting Data

- Column Headings
- Special PF Keys
- Detail and Summary Displays

First screen:

 Copyright © Software AG 2003

```
 14.11.01               *** Entire Operations 4.1.1 ***               10:59:31
 Owner EXAMPLE +-------------------------------------------------------------+
 ------------- !                                                             !
               !  Job Accounting Data: Selection                             !
     Reportin  !                                                             !
               !  Owner......: UKSJU_____    (Blank for all, * for selection  !
   1  Log - Te !  Network....: W>________     or * and PF4 to process all     !
   2  Log - Ab !  Job........: __________     matching objects)               !
   3  Log - Jo !                                                             !
   4  Accounti !                                                             !
   5  Network  !  Destination: 1                                             !
   6  Network  !     1 - Screen  2 - Printer  3 - PC  4 - PC-CSV              !
   7  Network  !                                                             !
   8  Network  ! Enter-PF1---PF2---PF3---PF4---PF5---PF6---PF7---PF8---PF9--- !
   9  Schedule !       Help        End   Apply Accpt                          !
  10  Network  +-------------------------------------------------------------+
  11  Network Schedule Overview
  12  Activation Overview


 Command => 4_____________________________________________________________
Enter-PF1---PF2---PF3---PF4---PF5---PF6---PF7---PF8---PF9---PF10--PF11--PF12---
      Help        End   Old                                                Menu
```

This example will display accounting data for all jobs in networks with names greater than W, under owner UKSJU.
Press PF4 or PF5 to select the date, time and run number ranges:

```
 14.11.01               *** Entire Operations 4.1.1 ***               10:59:31
 Owner EXAMPLE +-------------------------------------------------------------+
 ------------- !                                                             !
               !  Job Accounting Data: Selection                             !
     Reportin  !                                                             !
               !  Owner......: UKSJU_____    (Blank for all, * for selection  !
   1  Log - Te !  Network....: W>________     or * and PF4 to process all     !
   2  Log - Ab !  Job........: __________     matching objects)               !
   3  Log - Jo !                                                             !
   4  Accounti !                                                             !
   5  Network  !  Destination: 1                                             !
   6  Network  !     1 - Screen  2 - Printer  3 - PC  4 - PC-CSV              !
   7  Network  +-----------------------------------------------------+        !
   8  Network  !                                                     ! -PF9--- !
   9  Schedule !  Job Accounting Data: Selection                     !        !
  10  Network  !             Date / Run Number Selection             ! --------+
  11  Network  !                                                     !
  12  Activati !  From Date 01.11.01  00:00   to 14.11.01  23:59     !
               !  From Run  1____             to 99999               !
               !                                                     !
 Command => 4_ !  PF3  End                                           ! __
Enter-PF1---PF +-----------------------------------------------------+ --PF12---
      Help        End   Old                                                Menu
```

The historical elapsed and cpu times for the selected objects are displayed:

```
 14.11.01                *** Entire Operations 4.1.1 ***                11:09:10
 Owner  UKSJU                   Job Accounting Data           Network WLSJOBS
-------------------------------------------------------------------------------
 Job          Run      JobId Date      Start     Stop    Elapsed min CPU Tm sec
 WLS-JOB01     89      52937 02.11.01  16:05:50  16:06:33       0.71       1.74
 WLS-JOB02     89      52938           16:05:50  16:06:51       1.01       1.75
 WLS-JOB03     89      52939           16:05:50  16:06:31       0.68       1.73
 WLS-JOB04     89      52940           16:05:50  16:06:31       0.68       1.75
 WLS-JOB05     89      52941           16:05:50  16:06:31       0.68       1.74
 WLS-JOB06     89      52942           16:05:50  16:06:31       0.68       1.74
 WLS-JOB07     89      52943           16:06:31  16:07:10       0.65       1.71
 WLS-JOB08     89      52944           16:06:31  16:07:09       0.63       1.70
 WLS-JOB09     89      52945           16:06:31  16:07:09       0.63       1.70
 WLS-JOB10     89      52946           16:06:31  16:07:09       0.63       1.71
 WLS-JOB11     89      52947           16:06:33  16:07:10       0.61       1.69
 WLS-JOB12     89      52948           16:06:51  16:07:13       0.36       1.54
 WLS-JOB01     89      52978           16:11:43  16:12:31       0.80      15.61
 (Network)     89                      16:05:50  16:12:31       6.68      36.11
                                                            ---------- ----------
 Averages from 02.11.01 16:05 to 02.11.01 16:12 are             0.68       2.78
 ************************************* More *************************************
Enter-PF1---PF2---PF3---PF4---PF5---PF6---PF7---PF8---PF9---PF10--PF11--PF12---
                  End   Net               Up    Down                    Menu
```

The screen shows the Owner and Network in the title.

## Column Headings

| Column Name | Explanation |
|---|---|
| Job | Job name as defined to Entire Operations. |
| Run | Run number of the job. |
| JobId | Operating system job identifier. |
| Date | Date when the job started. |
| Start | Time when the job started. |
| Stop | Time when the job stopped. |
| Elapsed min | Elapsed time in minutes, to two decimal places. |
| CPU Tm sec | CPU time in seconds, to two decimal places. |

When the job name is (Network), this shows the start time of the first job in the network, the end time of the last job and the sum of elapsed and cpu times for all jobs in the network.

Averages fromtoare shows the average values of elapsed and cpu times for all jobs in the network.

## Special PF Keys

 Copyright © Software AG 2003

| Key | Name | Function |
|---|---|---|
| PF3 | End | Return to the Job Accounting Data: Selection window. |
| PF4 | Net | Toggle between job accounting data and network summary accounting data (see below). |
| PF7 | Up | Display previous screen of data for this network. |
| PF8 | Down | Display next screen of data for this network. If the last screen is already displayed (Bottom of Data shows instead of More), PF8 is named Next and displays the first screen for the next network. If there are no more networks matching the selection criteria, you are returned to the Job Accounting Data: Selection window. |
| PF12 | Menu | Return to the Entire Operations main menu. |

## Detail and Summary Displays

The initial display for each selected network shows accounting data for each job and a summary for each network. Assuming you have not made any job selection (that is, on the Job Accounting Data: Selection window, you left the Job field blank, or specified *), you may restrict the information to network summary data only, by pressing PF4:

```
 14.11.01               *** Entire Operations 4.1.1 ***              11:46:26
 Owner  UKSJU                   Job Accounting Data           Network WLSJOBS
-------------------------------------------------------------------------------
 Job          Run      JobId Date      Start     Stop    Elapsed min CPU Tm sec
 (Network)     89            02.11.01  16:05:50  16:12:31       6.68      36.11
 (Network)     90                      16:19:35  16:21:29       1.90      34.31
 (Network)     91                      16:27:28  16:38:39      11.18     194.08
 (Network)     92                      17:25:54  17:41:21      15.45     189.62
 (Network)     94            06.11.01  11:08:24  15:27:29     259.08      44.76
 ___________________________________________________________________________
                                                          ---------- ----------
 Averages from 02.11.01 16:05 to 06.11.01 15:27 are            58.86      99.78
 ****************************** Bottom of Data ******************************
Enter-PF1---PF2---PF3---PF4---PF5---PF6---PF7---PF8---PF9---PF10--PF11--PF12---
                  End   Job               Up    Next                    Menu
```

Pressing PF4 again, will return to the detailed job accounting display.

# Network Description

- Network Description (with JCL)
- Example 1
- Example 2

Screens:

```
 06.11.01              *** Entire Operations 4.1.1 ***              18:47:39
 Owner UKSJU   +-------------------------------------------------------------+
 ------------- !                                                             !
               !  Network Description (short)                                !
     Reportin  !                                                             !
               !  Owner......: EXAMPLE___    (Blank for all, * for selection  !
   1  Log - Te !  Network....: __________     or * and PF4 to process all     !
   2  Log - Ab !                             matching objects)               !
   3  Log - Jo !                                                             !
   4  Accounti !                                                             !
   5  Network  !  Destination: 1                                             !
   6  Network  !     1 - Screen  2 - Printer  3 - PC  4 - PC-CSV              !
   7  Network  !                                                             !
   8  Network  ! Enter-PF1---PF2---PF3---PF4---PF5---PF6---PF7---PF8---PF9--- !
   9  Schedule !       Help        End   Apply Accpt                          !
  10  Network  +-------------------------------------------------------------+
  11  Network Schedule Overview
  12  Activation Overview


 Command => 5_____________________________________________________________
Enter-PF1---PF2---PF3---PF4---PF5---PF6---PF7---PF8---PF9---PF10--PF11--PF12---
      Help        End   Old                                             Menu
```

**Note:**
Job is not a selection criterion.

```
 14.11.01              *** Entire Operations 4.1.1 ***              11:52:50
 Owner EXAMPLE +-------------------------------------------------------------+
 ------------- !                                                             !
               !  Network Description (detailed)                             !
     Reportin  !                                                             !
               !  Owner......: EXAMPLE___    (Blank for all, * for selection  !
   1  Log - Te !  Network....: __________     or * and PF4 to process all     !
   2  Log - Ab !                             matching objects)               !
   3  Log - Jo !                                                             !
   4  Accounti !                                                             !
   5  Network  !  Destination: 1                                             !
   6  Network  !     1 - Screen  2 - Printer  3 - PC  4 - PC-CSV              !
   7  Network  !                                                             !
   8  Network  ! Enter-PF1---PF2---PF3---PF4---PF5---PF6---PF7---PF8---PF9--- !
   9  Schedule !       Help        End   Apply Accpt                          !
  10  Network  +-------------------------------------------------------------+
  11  Network Schedule Overview
  12  Activation Overview


 Command => 6_____________________________________________________________
Enter-PF1---PF2---PF3---PF4---PF5---PF6---PF7---PF8---PF9---PF10--PF11--PF12---
      Help        End   Old                                             Menu
```

 Copyright © Software AG 2003

There is now a 3rd Network Description option.

## Network Description (with JCL)

Displays the same information as the detailed report and additionally prints out the JCL of each job with JCL location BS2, LMS, NAT, PDS, LIB or VSE. Please note that, for security reasons, no Entire System Server logons are performed. This means that the user must already have logged on to each node containing JCL (or the node must be started with the AUTOLOG=YES parameter).

```
 14.11.01              *** Entire Operations 4.1.1 ***              11:53:56
 Owner EXAMPLE +-------------------------------------------------------------+
 ------------- !                                                             !
               !  Network Description (with JCL)                             !
     Reportin  !                                                             !
               !  Owner......: EXAMPLE___    (Blank for all, * for selection  !
   1  Log - Te !  Network....: __________     or * and PF4 to process all     !
   2  Log - Ab !                             matching objects)               !
   3  Log - Jo !                                                             !
   4  Accounti !                                                             !
   5  Network  !  Destination: 1                                             !
   6  Network  !     1 - Screen  2 - Printer  3 - PC  4 - PC-CSV              !
   7  Network  !                                                             !
   8  Network  ! Enter-PF1---PF2---PF3---PF4---PF5---PF6---PF7---PF8---PF9--- !
   9  Schedule !       Help        End   Apply Accpt                          !
  10  Network  +-------------------------------------------------------------+
  11  Network Schedule Overview
  12  Activation Overview



 Command => 7_____________________________________________________________
Enter-PF1---PF2---PF3---PF4---PF5---PF6---PF7---PF8---PF9---PF10--PF11--PF12---
      Help        End   Old                                            Menu
```

Example screens for JCL:

## Example 1

```
14/11/01                      Entire Operations                      12:07:04

Network  E10-PAR-01         Network Documentation            Owner  EXAMPLE

Job      E10-J01

-------------------------------------------------------------------------------

Job: E10-J01     Type JOB PDS      Description: 1st sequential job

Location   :  NAT

DSN/Library:  EOR-T321                                      Member: E10-J01

Node       :  146


Schedule Parameters          Send Late Message To

------------------------     --------------------

Earliest Start:

Latest Start  :

Deadline      :

Elapsed Time  : 0.04


JCL for E10-J01 follows









Enter-PF1---PF2---PF3---PF4---PF5---PF6---PF7---PF8---PF9---PF10--PF11--PF12---
                  End                                                     Menu
```

# Example 2

 Copyright © Software AG 2003

```
14/11/01                      Entire Operations                      12:07:44

Network  E10-PAR-01         Network Documentation            Owner  EXAMPLE

Job      E10-J01

-------------------------------------------------------------------------------

//EORE10J1 JOB @UID,CLASS=@CLASS,MSGCLASS=@MSGCLASS,MSGLEVEL=(1,1)

//* ***************************

//* JOB ENDED OK COND CODE 0000

//* ***************************

//JOBLIB  DD    DSN=@JOBLIB,DISP=SHR

//STEP01   EXEC  PGM=NOPCONTI

//



Enter-PF1---PF2---PF3---PF4---PF5---PF6---PF7---PF8---PF9---PF10--PF11--PF12---
                 End                                                     Menu
```

# Network Job Flow Display

Screen:

```
 06.11.01               *** Entire Operations 4.1.1 ***               18:48:35

 Owner UKSJU   +-------------------------------------------------------------+

 ------------- !                                                             !

               !  Network Job Flow Display                                   !

     Reportin !                                                              !

               !  Owner......: UKSJU_____    (Blank for all, * for selection  !

   1  Log - Te !  Network....: __________     or * and PF4 to process all     !

   2  Log - Ab !                              matching objects)               !

   3  Log - Jo !                                                              !

   4  Accounti !                                                              !

   5  Network  !  Destination: 1                                              !

   6  Network  !     1 - Screen  2 - Printer  3 - PC  4 - PC-CSV              !

   7  Network  !                                                              !

   8  Network  ! Enter-PF1---PF2---PF3---PF4---PF5---PF6---PF7---PF8---PF9--- !

   9  Schedule !       Help        End   Apply Accpt                          !

  10  Network  +-------------------------------------------------------------+

  11  Network Schedule Overview

  12  Activation Overview




 Command => 8_____________________________________________________________
Enter-PF1---PF2---PF3---PF4---PF5---PF6---PF7---PF8---PF9---PF10--PF11--PF12---
      Help        End   Old                                             Menu
```

Again, Job is not a selection criterion.

# Schedule of Jobs

Screens:

 Copyright © Software AG 2003

```
 06.11.01               *** Entire Operations 4.1.1 ***               18:49:50

 Owner UKSJU   +-------------------------------------------------------------+

 ------------- !                                                             !

               !  Schedule of Jobs                                           !

     Reportin !                                                              !

               !  Owner......: UKSJU_____    (Blank for all, * for selection  !

   1  Log - Te !  Network....: __________     or * and PF4 to process all     !

   2  Log - Ab !                              matching objects)               !

   3  Log - Jo !                                                              !

   4  Accounti !                                                              !

   5  Network  !  Destination: 1                                              !

   6  Network  !     1 - Screen  2 - Printer  3 - PC  4 - PC-CSV              !

   7  Network  !                                                              !

   8  Network  ! Enter-PF1---PF2---PF3---PF4---PF5---PF6---PF7---PF8---PF9--- !

   9  Schedule !       Help        End   Apply Accpt                          !

  10  Network  +-------------------------------------------------------------+

  11  Network Schedule Overview

  12  Activation Overview




 Command => 9_____________________________________________________________
Enter-PF1---PF2---PF3---PF4---PF5---PF6---PF7---PF8---PF9---PF10--PF11--PF12---
      Help        End   Old                                            Menu
```

Again, Job is not a selection criterion. After selecting Owner and Network, you can select a date range:

```
 06.11.01               *** Entire Operations 4.1.1 ***               18:49:50
 Owner UKSJU   +-------------------------------------------------------------+
 ------------- !                                                             !
               !  Schedule of Jobs                                           !
     Reportin  !                                                             !
               !  Owner......: UKSJU_____    (Blank for all, * for selection  !
   1  Log - Te !  Network....: __________     or * and PF4 to process all     !
   2  Log - Ab !                             matching objects)               !
   3  Log - Jo !                                                             !
   4  Accounti !                                                             !
   5  Network  !  Destination: 1                                             !
   6  Network  !     1 - Screen  2 - Printer  3 - PC  4 - PC-CSV              !
   7  Network  !                +---------------------------------------+     !
   8  Network  ! Enter-PF1---PF !                                       ! --- !
   9  Schedule !       Help     !  Schedule of Jobs                      !     !
  10  Network  +--------------- !                                       ! ----+
  11  Network Schedule Overview !      Start Date  ===> 06.11.01        !
  12  Activation Overview       !                                       !
                                !      End Date    ===> 06.11.01        !
                                !                                       !
 Command => 9_________________  !  Enter                    PF3 End     !
Enter-PF1---PF2---PF3---PF4---P +---------------------------------------+ 12---
      Help        End   Old                                            Menu
```

The date range may not exceed 31 days.

# Network Start Summary

Screens:

 Copyright © Software AG 2003

```
 06.11.01               *** Entire Operations 4.1.1 ***               18:57:58

 Owner UKSJU   +-------------------------------------------------------------+

 ------------- !                                                             !

               !  Network Start Summary                                      !

     Reportin !                                                              !

               !  Owner......: UKSJU_____    (Blank for all, * for selection  !

   1  Log - Te !  Network....: __________     or * and PF4 to process all     !

   2  Log - Ab !                              matching objects)               !

   3  Log - Jo !                                                              !

   4  Accounti !                                                              !

   5  Network  !  Destination: 1                                              !

   6  Network  !     1 - Screen  2 - Printer  3 - PC  4 - PC-CSV              !

   7  Network  !                                                              !

   8  Network  ! Enter-PF1---PF2---PF3---PF4---PF5---PF6---PF7---PF8---PF9--- !

   9  Schedule !       Help        End   Apply Accpt                          !

  10  Network  +-------------------------------------------------------------+

  11  Network Schedule Overview

  12  Activation Overview




 Command => 10_____________________________________________________________
Enter-PF1---PF2---PF3---PF4---PF5---PF6---PF7---PF8---PF9---PF10--PF11--PF12---
      Help        End   Old                                              Menu
```

Again, Job is not a selection criterion. After selecting Owner and Network, you can select a date range:

```
 06.11.01               *** Entire Operations 4.1.1 ***               18:57:58
 Owner UKSJU   +-------------------------------------------------------------+
 ------------- !                                                             !
               !  Network Start Summary                                      !
     Reportin  !                                                             !
               !  Owner......: UKSJU_____    (Blank for all, * for selection  !
   1  Log - Te !  Network....: __________     or * and PF4 to process all     !
   2  Log - Ab !                             matching objects)               !
   3  Log - Jo !                                                             !
   4  Accounti !                                                             !
   5  Network  !  Destination: 1                                             !
   6  Network  !     1 - Screen  2 - Printer  3 - PC  4 - PC-CSV              !
   7  Network  !                +---------------------------------------+     !
   8  Network  ! Enter-PF1---PF !                                       ! --- !
   9  Schedule !       Help     !  Network Start Summary                 !     !
  10  Network  +--------------- !                                       ! ----+
  11  Network Schedule Overview !      Start Date  ===> 01.11.01        !
  12  Activation Overview       !                                       !
                                !      End Date    ===> 06.11.01        !
                                !                                       !
 Command => 10_________________ !  Enter                    PF3 End     !
Enter-PF1---PF2---PF3---PF4---P +---------------------------------------+ 12---
      Help        End   Old                                            Menu
```

Results:

 Copyright © Software AG 2003

```
06.11.01                    Entire Operations                       19:22:09

                 Network Start Summary for 01.11.01 thru 06.11.01      Page    1

  ---------------------------------------------------------------------------


  UKSJU      WLSJOBS

  ---------------------
  (  89) 02.11 16:00             Network Activation

         02.11 16:00             EOR2941 - Network Act. sched. on 02.11.01 at 16

         02.11 16:00             Symbol Prompting in Progress

         02.11 16:00             Symbol Prompting by UKSJU

         02.11 16:00             Symbol Table WLS activated

         02.11 16:00             Symbol Prompt Standard Routine used

         02.11 16:00             Symbol Prompting finished

         02.11 16:01             Act.Symbols modified by SYPG-SN1

         02.11 16:01             Activation Net 02.11 16:00

         02.11 16:01  WLS-JOB01  Awaiting JCL Load

         02.11 16:01  WLS-JOB02  Awaiting JCL Load

         02.11 16:01  WLS-JOB03  Awaiting JCL Load

         02.11 16:01  WLS-JOB04  Awaiting JCL Load

         02.11 16:01  WLS-JOB05  Awaiting JCL Load





 MORE
```

# Network Schedule Overview

Screens:

1. Select report type (description same as on page 481):

```
 14.11.01               *** Entire Operations 4.1.1 ***               12:19:35
 Owner EXAMPLE                    Reporting Menu                User ID UKSJU
 ------------------ +-------------------------------------------------------+
                    !                                                       !
      Reporting Men !   Network Schedule Overview: Type                     !
                    !                                                       !
   1  Log - Termina !  A Extractions + Schedule, sorted by network, time    !
   2  Log - Abended !  B Extractions only,       sorted by network, time    !
   3  Log - Jobs no !  C Extractions only,       sorted by time             !
   4  Accounting Da !                                                       !
   5  Network Descr !  Type    ==> A                                        !
   6  Network Descr !                                                       !
   7  Network Descr !  Enter------PF3-----------------------------------    !
   8  Network Job F !             End                                       !
   9  Schedule of J +-------------------------------------------------------+
  10  Network Start Summary
  11  Network Schedule Overview
  12  Activation Overview


 Command => 11_____________________________________________________________
Enter-PF1---PF2---PF3---PF4---PF5---PF6---PF7---PF8---PF9---PF10--PF11--PF12---
      Help        End   Old                                            Menu
```

2. Select Owner, Network, Destination:

 Copyright © Software AG 2003

```
 14.11.01              *** Entire Operations 4.1.1 ***              12:19:35

 Owner EXAMPLE +-------------------------------------------------------------+

 ------------- !                                                             !

               !  Network Schedule Overview                                  !

     Reportin !                                                              !

               !  Owner......: EXAMPLE___    (Blank for all, * for selection  !

   1  Log - Te !  Network....: __________     or * and PF4 to process all     !

   2  Log - Ab !                              matching objects)               !

   3  Log - Jo !                                                              !

   4  Accounti !                                                              !

   5  Network  !  Destination: 1                                              !

   6  Network  !     1 - Screen  2 - Printer  3 - PC  4 - PC-CSV              !

   7  Network  !                                                              !

   8  Network  ! Enter-PF1---PF2---PF3---PF4---PF5---PF6---PF7---PF8---PF9--- !

   9  Schedule !       Help        End   Apply Accpt                          !

  10  Network  +-------------------------------------------------------------+

  11  Network Schedule Overview

  12  Activation Overview




 Command => 11_____________________________________________________________

Enter-PF1---PF2---PF3---PF4---PF5---PF6---PF7---PF8---PF9---PF10--PF11--PF12---
      Help        End   Old                                            Menu
```

3. Select date range:

```
 14.11.01               *** Entire Operations 4.1.1 ***               12:23:59
 Owner EXAMPLE +-------------------------------------------------------------+
 ------------- !                                                             !
               !  Network Schedule Overview                                  !
     Reportin  !                                                             !
               !  Owner......: EXAMPLE___    (Blank for all, * for selection  !
   1  Log - Te !  Network....: __________     or * and PF4 to process all     !
   2  Log - Ab !                              matching objects)               !
   3  Log - Jo !                                                             !
   4  Accounti !                                                             !
   5  Network  !  Destination: 1                                             !
   6  Network  !     1 - Screen  2 - Printer  3 - PC  4 - PC-CSV              !
   7  Network  !                +---------------------------------------+    !
   8  Network  ! Enter-PF1---PF !                                       ! --- !
   9  Schedule !       Help     !  Network Schedule Overview             !    !
  10  Network  +--------------- !                                       ! ----+
  11  Network Schedule Overview !      Start Date  ===> 14.11.01        !
  12  Activation Overview       !                                       !
                                !      End Date    ===> 21.11.01        !
                                !                                       !
 Command => 11________________  !  Enter                     PF3 End   !
Enter-PF1---PF2---PF3---PF4---P +---------------------------------------+ 12---
      Help        End   Old                                             Menu
```

4. Resulting screen:

 Copyright © Software AG 2003

```
14.11.01                    Entire Operations                       12:24:44

  Owner   EXAMPLE

  Network E52-LOGRES   Schedule from 14.11.01 thru 21.11.01           Page    1


             Date     Time   Owner      Network     Run  Type

  ------------------------------------------------------------------------------

  Wednesday  14.11.01 08:00  EXAMPLE    E52-LOGRES       Schedule, periodic

  Thursday   15.11.01 08:00  EXAMPLE    E52-LOGRES       Schedule, periodic

  Friday     16.11.01 08:00  EXAMPLE    E52-LOGRES       Schedule, periodic

  Saturday   17.11.01 08:00  EXAMPLE    E52-LOGRES       Schedule, periodic

  Sunday     18.11.01 08:00  EXAMPLE    E52-LOGRES       Schedule, periodic


  Monday     19.11.01 08:00  EXAMPLE    E52-LOGRES       Schedule, periodic

  Tuesday    20.11.01 08:00  EXAMPLE    E52-LOGRES       Schedule, periodic

  Wednesday  21.11.01 08:00  EXAMPLE    E52-LOGRES       Schedule, periodic

  ------------------------------------------------------------------------------









 MORE
```

# Activation Overview

- Column Headings
- Special PF Keys
- Left and Right Scrolling

1. Select activation types:

```
 14.11.01               *** Entire Operations 4.1.1 ***               14:30:29
 Owner UKSJU   +-------------------------------------------------------+ KSJU
 ------------- !                                                       ! -------
               !              Activation Overview: Type                !
     Reportin  !                                                       !
               !  Select one or more of these Activation Types:        !
   1  Log - Te !  * All types               A API                      !
   2  Log - Ab !  M Manual                  O EOJ                      !
   3  Log - Jo !  R Recovery                S Scheduled                !
   4  Accounti !                                                       !
   5  Network  !  Type    ==> *_______                                 !
   6  Network  !                                                       !
   7  Network  !  Enter------PF3-----------------------------------   !
   8  Network  !             End                                       !
   9  Schedule +-------------------------------------------------------+
  10  Network Start Summary
  11  Network Schedule Overview
  12  Activation Overview


 Command => 12_____________________________________________________________
Enter-PF1---PF2---PF3---PF4---PF5---PF6---PF7---PF8---PF9---PF10--PF11--PF12---
      Help        End   Old                                            Menu
```

2. Select Owner, Network and destination:

 Copyright © Software AG 2003

```
 14.11.01              *** Entire Operations 4.1.1 ***              14:33:48

 Owner UKSJU   +-------------------------------------------------------------+

 ------------- !                                                             !

               !  Activation Overview                                        !

     Reportin  !                                                             !

               !  Owner......: UKSJU_____    (Blank for all, * for selection  !

   1 Log - Te  !  Network....: __________     or * and PF4 to process all     !

   2 Log - Ab  !                              matching objects)               !

   3 Log - Jo  !                                                             !

   4 Accounti  !                                                             !

   5 Network   !  Destination: 1                                             !

   6 Network   !     1 - Screen  2 - Printer  3 - PC  4 - PC-CSV             !

   7 Network   !                                                             !

   8 Network   ! Enter-PF1---PF2---PF3---PF4---PF5---PF6---PF7---PF8---PF9--- !

   9 Schedule  !       Help        End   Apply Accpt                         !

  10 Network   +-------------------------------------------------------------+

  11 Network Schedule Overview

  12 Activation Overview




 Command => 12_____________________________________________________________
Enter-PF1---PF2---PF3---PF4---PF5---PF6---PF7---PF8---PF9---PF10--PF11--PF12---
     Help        End   Old                                              Menu
```

3. Select date, time and run number ranges:

```
 14.11.01              *** Entire Operations 4.1.1 ***              14:33:48

 Owner UKSJU   +-------------------------------------------------------------+

 ------------- !                                                             !

               !  Activation Overview                                        !

     Reportin  !                                                             !

               !  Owner......: UKSJU_____    (Blank for all, * for selection  !

   1  Log - Te !  Network....: __________     or * and PF4 to process all     !

   2  Log - Ab !                              matching objects)               !

   3  Log - Jo !                                                             !

   4  Accounti !                                                             !

   5  Network  !  Destination: 1                                             !

   6  Network  !     1 - Screen  2 - Printer  3 - PC  4 - PC-CSV             !

   7  Network  +-----------------------------------------------------+        !

   8  Network  !                                                   ! -PF9--- !

   9  Schedule !  Activation Overview                               !         !

  10  Network  !             Date / Run Number Selection            ! --------+

  11  Network  !                                                   !

  12  Activati !  From Date 02.11.01  00:00   to 14.11.01  23:59    !

               !  From Run  1____             to 99999              !

               !                                                    !

 Command => 12 !  PF3  End                                          ! __
Enter-PF1---PF +-----------------------------------------------------+ --PF12---
     Help        End   Old                                              Menu
```

4. Resulting screen:

 **Copyright © Software AG 2003**

```
                                                Entire Operations: Activation Ov

--------------------------------------------------------------------------------

Date: 02.11.01

  Owner      Network    Job        Run   Time  Type       Message

  ---------- ---------- ---------- ----- ----- ---------- ---------------------


  UKSJU      WLSJOBS    -             88 00:00 Scheduled  Activation Net 02.11

  UKSJU      AAAA-NET   NAT-SYMBOL    44 15:14 Manual     Job Act. sched. on 02

  UKSJU      AAAA-NET   NAT-SYMBOL    45 15:15 Manual     Job Act. sched. on 02

  UKSJU      AAAA-NET   NAT-SYMBOL    46 15:16 Manual     Job Act. sched. on 02

  UKSJU      AAAA-NET   NAT-SYMBOL    47 15:17 Manual     Job Act. sched. on 02

  UKSJU      AAAA-NET   NAT-SYMBOL    48 15:26 Manual     Job Act. sched. on 02

  UKSJU      AAAA-NET   NAT-SYMBOL    49 15:38 Manual     Job Act. sched. on 02

  UKSJU      AAAA-NET   QQQQQQQQ      50 15:43 Manual     Job Act. sched. on 02

  UKSJU      WLSJOBS    -             89 16:00 Manual     Network Act. sched. o

  UKSJU      WLSJOBS    -             89 16:01 Scheduled  Activation Net 02.11

  UKSJU      TEST-REP1  -             74 16:07 EOJ        Activated by UKSJU/WL

  UKSJU      TEST-REP1  REALJOB1      75 16:07 EOJ        Activated by UKSJU/WL

  UKSJU      TEST-REP1  -             74 16:07 Scheduled  Activation Net 02.11

 ************************************* m o r e ***********************************
Enter-PF1---PF2---PF3---PF4---PF5---PF6---PF7---PF8---PF9---PF10--PF11--PF12---
                 End                            Down        Left  Right Menu
```

This screen shows, for each date in the selected range:

## Column Headings

| Column | Explanation |
|---|---|
| Owner | Owner name. |
| Network | Network name. |
| Job | Job name for a single job activation or for a network activation. |
| Run | Run number. |
| Time | Time job or network was activated. |
| Type | Type of activation:<br>Scheduled - activated because of schedule.<br>Manual - activated manually.<br>EOJ - activated by an EOJ action.<br>API - activated via NOPUAC4N.<br>Recovery - activated by EOJ recovery processing. |
| Message | Log message associated with activation. |

## Special PF Keys

| Key | Name | Function |
|---|---|---|
| PF3 | End | Returns to Activation Type selection. |
| PF8 | Down | Scrolls down. |
| PF10 | Left | Scrolls left. |
| PF11 | Right | Scrolls right. |
| PF12 | Menu | Returns to the Entire Operations main menu. |

## Left and Right Scrolling

You can scroll right (twice) by pressing PF11:

1. First scroll right:

 Copyright © Software AG 2003

```
                           Entire Operations: Activation Overview

--------------------------------------------------------------------------------



    Job        Run   Time  Type       Message

--- ---------- ----- ----- ---------- ----------------------------------------



    -             88 00:00 Scheduled  Activation Net 02.11 09:30

T   NAT-SYMBOL    44 15:14 Manual     Job Act. sched. on 02.11.01 at 15:14 Run

T   NAT-SYMBOL    45 15:15 Manual     Job Act. sched. on 02.11.01 at 15:15 Run

T   NAT-SYMBOL    46 15:16 Manual     Job Act. sched. on 02.11.01 at 15:16 Run

T   NAT-SYMBOL    47 15:17 Manual     Job Act. sched. on 02.11.01 at 15:17 Run

T   NAT-SYMBOL    48 15:26 Manual     Job Act. sched. on 02.11.01 at 15:26 Run

T   NAT-SYMBOL    49 15:38 Manual     Job Act. sched. on 02.11.01 at 15:38 Run

T   QQQQQQQQ      50 15:43 Manual     Job Act. sched. on 02.11.01 at 15:43 Run

    -             89 16:00 Manual     Network Act. sched. on 02.11.01 at 16:00

    -             89 16:01 Scheduled  Activation Net 02.11 16:00

P1  -             74 16:07 EOJ        Activated by UKSJU/WLSJOBS/WLS-JOB01 Run

P1  REALJOB1      75 16:07 EOJ        Activated by UKSJU/WLSJOBS/WLS-JOB02 Run

P1  -             74 16:07 Scheduled  Activation Net 02.11 16:07

***************** m o r e ************************************
Enter-PF1---PF2---PF3---PF4---PF5---PF6---PF7---PF8---PF9---PF10--PF11--PF12---
                  End                           Down        Left  Right Menu
```

2. Second scroll right:

```
        Entire Operations: Activation Overview

-------------------------------------------------------------------------------



 Time  Type       Message

 ----- ---------- -------------------------------------------------------------



 00:00 Scheduled  Activation Net 02.11 09:30

 15:14 Manual     Job Act. sched. on 02.11.01 at 15:14 Run 44

 15:15 Manual     Job Act. sched. on 02.11.01 at 15:15 Run 45

 15:16 Manual     Job Act. sched. on 02.11.01 at 15:16 Run 46

 15:17 Manual     Job Act. sched. on 02.11.01 at 15:17 Run 47

 15:26 Manual     Job Act. sched. on 02.11.01 at 15:26 Run 48

 15:38 Manual     Job Act. sched. on 02.11.01 at 15:38 Run 49

 15:43 Manual     Job Act. sched. on 02.11.01 at 15:43 Run 50

 16:00 Manual     Network Act. sched. on 02.11.01 at 16:00 Run 89

 16:01 Scheduled  Activation Net 02.11 16:00

 16:07 EOJ        Activated by UKSJU/WLSJOBS/WLS-JOB01 Run 89

 16:07 EOJ        Activated by UKSJU/WLSJOBS/WLS-JOB02 Run 89

 16:07 Scheduled  Activation Net 02.11 16:07

o r e ***********************************
Enter-PF1---PF2---PF3---PF4---PF5---PF6---PF7---PF8---PF9---PF10--PF11--PF12---
                  End                           Down        Left  Right Menu
```

3. Use PF10 to scroll left.

# Producing Reports in Batch

- Log Reports
- Accounting Data
- Network Information
- Network Job Flow
- Schedule of Jobs
- Network Start Summary
- Network Schedule Overview
- Activation Overview
- Extended Log Report

 Copyright © Software AG 2003

All of the above reports can also be run in batch. As noted above, no security or wildcard restrictions apply in batch.

Batch reports are printed on Natural printer 1, which must be allocated correctly in the job control. The Natural batch session must have the necessary LFILEs (131 and 216) correctly set and should run in delimiter input mode (IM=D). The examples below assume that input delimiter is set to ,.

The batch reporting programs input their parameters in several steps. This is described separately for each program.

# Log Reports

Log reports (equivalent to online options 1, 2 and 3) are produced by program RE-LOG-P. It does 3 INPUTs:

1. Options
   - Report type
     **A** all events in log
     **B** abended jobs
     **T** terminated jobs
     **X** not started jobs
   - Count Jobs
     **Y** produce a count of jobs (Warning: this requires a rereading of the whole log and therefore will greatly increase the elapsed and cpu times and the number of Adabas calls for the batch job)
     **N** do not produce a count of jobs
2. Owner/Network/Job
   - Owner name. *, > and < wildcards are allowed. Use * for all owners.
   - Network name. *, > and < wildcards are allowed. Use * for all networks.
   - Job name. *, > and < wildcards are allowed. Use * for all jobs.
3. Date, time, run number ranges
   - From date (format YYYYMMDD)
   - From time (format HH:II:SS)
   - From run (maximum 999999999)
   - To date (format YYYYMMDD)
   - To time (format HH:II:SS)
   - To run (maximum 999999999)

## Examples

Below are examples of Natural CMSYNIN data for producing various log reports:

```
RE-LOG-P T,Y

EX*,E10>

20011101,,,20011130,23:59:59,999999999
```

will produce a report of all terminated jobs in networks with names greater than E10 under owners beginning EX, starting at 00:00:00 on 1st November 2001 and ending at 23:59:59 on 30th November 2001, for run numbers in the range 0 to 999999999. A count of jobs will be produced.

```
RE-LOG-P A,N

*,*,*

20011114,09:00:00,51,20011114,17:30:00,60
```

will produce a report of all events between 09:00:00 and 17:30:00 on 14th November 2001 for all owners, networks and jobs with run numbers between 51 and 60. A count of jobs will not be produced.

# Accounting Data

Accounting data (equivalent to online option 4) is produced by program RE-ACC-P. It does 2 INPUTs:

1. Owner/Network/Job
   - Owner name. *, > and < wildcards are allowed. Use * for all owners.
   - Network name. *, > and < wildcards are allowed. Use * for all networks.
   - Job name. *, > and < wildcards are allowed. Use * for all jobs.
2. Date, time, run number ranges
   - From date (format YYYYMMDD)
   - From time (format HH:II:SS)
   - From run (maximum 999999999)
   - To date (format YYYYMMDD)
   - To time (format HH:II:SS)
   - To run (maximum 999999999)

## Examples

Below are examples of Natural CMSYNIN data for producing various accounting reports:

```
RE-ACC-P

EXAMPLE,E01-CONTI

20011101,,,20011130,23:59:59,999999999
```

will produce accounting data for all jobs in network E01-CONTI under owner EXAMPLE, starting at 00:00:00 on 1st November 2001 and ending at 23:59:59 on 30th November 2001, for run numbers in the range 0 to 999999999.

```
RE-ACC-P

EXAMPLE,*,E10*

20011101,09:00:00,51,20011231,23:59:59,60
```

will produce accounting data for for all jobs beginning E10 in all networks under owner EXAMPLE, starting it 09:00:00 on 1st November 2001 ending at 23:59:59 on 31st December 2001, with run numbers between 51 and 60.

# Network Information

Network reports (equivalent to online options 5, 6 and 7) are produced by program RE-NET-P. It does 2 INPUTs:

1. Report type
   - **S** summary
   - **D** detailed
   - **J** detailed, with JCL
2. Owner/Network
   - Owner name. *,> and < wildcards are allowed. Use * for all owners.
   - Network name. *,> and < wildcards are allowed. Use * for all networks.

 Copyright © Software AG 2003

### Examples

Below are examples of Natural CMSYNIN data for producing various network reports:

```
RE-NET-P S

*,*
```

will produce a summary report for all networks.

```
RE-NET-P J

SYS*,W>
```

will produce a detailed report, including JCL for all networks with names greater than W in owners beginning SYS.

## Network Job Flow

Network job flow (equivalent to online option 8) is produced by program RE-FLW-P. It does 1 INPUT:

1. Owner/Network
   - Owner name. *,> and < wildcards are allowed. Use * for all owners.
   - Network name. *,> and < wildcards are allowed. Use * for all networks.

### Examples

Below are examples of Natural CMSYNIN data for producing various network job flow reports:

```
RE-FLW-P

EXAMPLE,E60-FLOW
```

will produce a report for E60-FLOW in owner EXAMPLE.

```
RE-FLW-P

SYS*,W>
```

will produce a report for all networks with names greater than W in owners beginning SYS.

## Schedule of Jobs

Job schedules (equivalent to online option 9) are produced by program RE-JSC-P. It does 2 INPUTs:

1. Owner/Network
   - Owner name. *,> and < wildcards are allowed. Use * for all owners.
   - Network name. *,> and < wildcards are allowed. Use * for all networks.
2. Date range
   - From date (format YYYYMMDD)
   - To date (format YYYYMMDD)

### Examples

Below are examples of Natural CMSYNIN data for producing various job schedule reports:

```
RE-JSC-P
EXAMPLE,E01-CONTI
20011101,20011130
```

will produce a schedule of jobs in network E01-CONTI under owner EXAMPLE, between 1st and 30th November 2001.

```
RE-JSC-P
*,*
20011101,20011231
```

will produce a schedule of all jobs, between 1st and 30th November 2001.

## Network Start Summary

The network start summary (equivalent to online option 10) is produced by program RE-ACT-P. It does 2 INPUTs:

1. Owner/Network
   - Owner name. *,> and < wildcards are allowed. Use * for all owners.
   - Network name. *,> and < wildcards are allowed. Use * for all networks.
2. Date range
   - From date (format YYYYMMDD)
   - To date (format YYYYMMDD)

### Examples

Below are examples of Natural CMSYNIN data for producing various network start summary reports:

```
RE-ACT-P
EXAMPLE,*
20011101,20011130
```

will produce a summary of all networks under owner EXAMPLE, between 1st and 30th November 2001.

```
RE-ACT-P
E*,M<
20011101,20011231
```

will produce a summary of all networks with names less than M under owners beginning with E between 1st November and 31st December 2001.

## Network Schedule Overview

The network schedule overview (equivalent to online option 11) is produced by program RE-NSC-P. It does 3 INPUTs:

1. Report Type
   - **A** with schedule.
   - **B** to activate, sorted by network.
   - **C** to activate, sorted by time.
2. Owner/Network
   - Owner name. *,> and < wildcards are allowed. Use * for all owners.
   - Network name. *,> and < wildcards are allowed. Use * for all networks.
3. Date range
   - From date (format YYYYMMDD).
   - To date (format YYYYMMDD).

 Copyright © Software AG 2003

### Examples

Below are examples of Natural CMSYNIN data for producing various schedule overview reports:

```
RE-NSC-P A
EXAMPLE,*
20011101,20011130
```

will produce an overview of all networks under owner EXAMPLE, scheduled to run between 1st and 30th November 2001.

```
RE-NSC-P B
E*,M<
20011101,20011231
```

will produce an overview of schedule extractions (activations) of all networks with names less than M under owners beginning with E between 1st November and 31st December 2001.

## Activation Overview

The activation overview (equivalent to online option 12) is produced by program RE-ACO-P. It does 3 INPUTs:

1. Activation Types to be included in report
   - ***** all network activations
   - **A** networks activated via NOPUAC4N API
   - **M** networks activated manually
   - **O** networks activated as a result of EOJ checking
   - **R** networks activated as part of recovery processing for an abended job
   - **S** networks activated according to schedule
     You can either specify * or any combination of **A**, **M**, **O**, **R**, **S**
2. Owner/Network
   - Owner name. *,> and < wildcards are allowed. Use * for all owners.
   - Network name. *,> and < wildcards are allowed. Use * for all networks.
3. Date, time, run number ranges
   - From date (format YYYYMMDD)
   - From time (format HH:II:SS)
   - From run (maximum 999999999)
   - To date (format YYYYMMDD)
   - To time (format HH:II:SS)
   - To run (maximum 999999999)

### Examples

Below are examples of Natural CMSYNIN data for producing various activation overview reports:

```
RE-ACO-P AM
EXAMPLE,*
20011101,,,20011130 (equivalent to 20011101,00:00:00,1,20011130,23:59:59,999999999)
```

will produce an overview of all networks under owner EXAMPLE, activated manually or by API between 1st and 30th November 2001.

```
RE-ACO-P *
*,*
20011115,14:00:00,71,20011115,22:00:00,99
```

will produce an overview of all activations between 14:00:00 and 22:00:00 on 15th November 2001, with run numbers between 71 and 99.

## Extended Log Report

This report is only available in batch and can be used to print the following:

- log records
- job output written to the log
- active JCL changes written to the log
- active JCL

The report program is NOPLP01P and it does one input to receive these parameters:

| Parameter | Explanation | | |
|---|---|---|---|
| FROM-DATE-TIME | Format YYYYMMDDHHIISS, starting time for log report. | | |
| THRU-DATE-TIME | Format YYYYMMDDHHIISS, ending time for log report. | | |
| LANG | Language in which log records will be printed, either 1 for English (the default) or 2 for German. | | |
| OWNER | Owner(s) to be included in the report. The wildards *, > and < are allowed. | | |
| NETWORK | Network(s) to be included in the report. The wildcards *, > and < are allowed. | | |
| DBENV | Reserved for future use. Do not specify this parameter. | | |
| RUN-FROM | Starting run number. | | |
| RUN-THRU | Ending run number. | | |
| JOB | Job(s) to be included in the report. The wildcards *, > and < are allowed. | | |
| ACTJCL | **Y or N**.<br>If Y, any active JCL for jobs matching the owner/network/job/run criteria is printed after the log information. | | |
| SYSOUT | **Y or N**.<br>If Y, any logged sysout for jobs matching the owner/network/run/job/date/time criteria is printed. | | |
| CHGJCL | **Y or N**.<br>If Y, any active JCL modifications for jobs matching the owner/network/run/job/date/time criteria are printed. | EXTLOG | **Y or N**.<br>Specify a default value for ACTJCL, SYSOUT and CHGJCL. |

Because of the large number of parameters, you are recommended to use keyword mode for specifying them. NOPLP01P can be executed in a standard batch Natural, with LFILEs 131 and 216 set. The output is written to the Natural system print dataset (CMPRINT).

 Copyright © Software AG 2003

The following example assumes the Natural parameters IM=D,IA==,CF=%.

```
NOPLP01P

FROM-DATE-TIME=20011101000000%
THRU-DATE-TIME=20011115163000%
RUN-FROM=1%
RUN-THRU=999%
OWNER=UKSJ*%
NETWORK=TEST-2>%
JOB=L<%
LANG=2%
EXTLOG=Y
```

Will print all log records as well as logged sysout, logged active JCL modifications and active JCL for jobs with names less than L in networks with names greater than TEST-2 under owners beginning with UKSJ, with run numbers in the range 1 to 999 between 00:00 on 1st November 2001 and 16:30 on 15th November 2001. The log records will be printed in German.

**Note:**
The date/time range has no influence on printing of active JCL.

# Cross-References

(new cross-reference option)

Page 489, new screen shot:

```
15.11.01                *** Entire Operations 4.1.1 ***                17:03:15
Owner UKSJU                  Cross References Menu             User ID UKSJU
--------------------------------------------------------------------------------

     Cross References Menu

  1  User Routine Usage
  2  Symbol Table Usage
  3  JCL Usage

 Command => ____________________________________________________________
Enter-PF1---PF2---PF3---PF4---PF5---PF6---PF7---PF8---PF9---PF10--PF11--PF12---
      Help        End                                                   Menu
```

(Description of JCL Usage.)

You can use option 3 JCL Usage to find out which JCL files are used in which networks. Entering 3 on the command line, causes this screen to be shown:

 Copyright © Software AG 2003

```
 15.11.01               *** Entire Operations 4.1.1 ***               17:03:15
 Owne +-------------------------------------------------------------+ JU
 ---- !                                                              ! -----
      !                            JCL Usage                         !
      !                                                              !
      !  Enter selection criteria (with * Wildcard) or blank for all !
   1  !                                                              !
   2  !  File/Natlib    : ____________________________________________ !
   3  !  Member         : ________                                   !
      !  JCL Location   : ___                                        !
      !                                                              !
      !                                                              !
      !  Enter------PF3-----------------------------------------------  !
      !             End                                              !
      +--------------------------------------------------------------+



 Command => 3_____________________________________________________________
Enter-PF1---PF2---PF3---PF4---PF5---PF6---PF7---PF8---PF9---PF10--PF11--PF12---
      Help        End                                                 Menu
```

## Field Description

| Field | Explanation |
|---|---|
| File/Natlib | You can restrict the cross reference to an individual file or Natural library (or a set of files with the same prefix) by using an * wildcard. |
| Member | You can restrict the cross reference to an individual member (or a set of members with the same prefix) by using an * wildcard. |
| JCL Location | You can restrict the cross reference to any one of the supported JCL locations, or leave blank to include any location. |

Make your selection and press Enter to move on to the next screen:

```
 15.11.01               *** Entire Operations 4.1.1 ***               17:23:04
 Owne +------- +-------------------------------------------------------------+
 ---- !        !                                                             !
      !        !  JCL Usage                                                  !
      !        !                                                             !
      !  Enter !  Owner......: __________    (Blank for all, * for selection  !
   1  !        !  Network....: __________     or * and PF4 to process all     !
   2  !  File/ !                              matching objects)               !
   3  !  Membe !                                                             !
      !  JCL L !                                                             !
      !        !  Destination: 1                                             !
      !        !     1 - Screen  2 - Printer  3 - PC  4 - PC-CSV             !
      !  Enter !                                                             !
      !        ! Enter-PF1---PF2---PF3---PF4---PF5---PF6---PF7---PF8---PF9--- !
      +------- !       Help        End   Apply Accpt                         !
               +-------------------------------------------------------------+


 Command => 3_____________________________________________________________
Enter-PF1---PF2---PF3---PF4---PF5---PF6---PF7---PF8---PF9---PF10--PF11--PF12---
      Help        End                                                     Menu
```

Here you can restrict the cross-reference to particular owners and networks, using the *, < and > wildcard characters. You can also choose any of the 4 destinations. Fields and PF keys are the same as for the reporting system, described above.

### To produce the cross-reference listing in batch

- Run XRJCL--P in a standard batch Natural job with LFILEs 131 and 216 assigned and printer file 1 correctly defined.

The program does 2 inputs:

1. File/Natlib, Member, JCL Location
2. Owner, Network

The following examples assume the Natural parameters IM=D,ID=,:

```
XRJCL--P
PROD1.JOBLIB,IEB*
SYS*,W
```

Will produce a list of all jobs in networks with names less than W under owners beginning with SYS that use JCL members beginning with IEB in dataset PROD1.JOBLIB.

```
XRJCLP
SYS*,*,NAT
*,*
```

Will produce a list of all jobs which use JCL in Natural libraries beginning with SYS.

 Copyright © Software AG 2003

# General Information

This subsection applies to all reporting options.

It covers the following topics:

- Selection
- Special PF Keys
- Security
- Batch Execution

---

## Selection

Selection of data is handled in a similar way for all reports.
After selecting the report option, (and for Network Schedule Overview and Activation Overview, the report-specific selection criteria), you receive the following selection window:

```
 06.11.01              *** Entire Operations 4.1.1 ***              17:07:43

 Owner EXAMPLE +-------------------------------------------------------------+

 ------------- !                                                             !

               !  Log - Terminated Jobs                                      !

     Reportin !                                                              !

               !  Owner......: __________    (Blank for all, * for selection  !

   1  Log - Te !  Network....: __________     or * and PF4 to process all     !

   2  Log - Ab !  Job........: __________     matching objects)               !

   3  Log - Jo !                                                             !

   4  Accounti !                                                             !

   5  Network  !  Destination: 1                                             !

   6  Network  !     1 - Screen  2 - Printer  3 - PC  4 - PC-CSV              !

   7  Network  !                                                             !

   8  Network  ! Enter-PF1---PF2---PF3---PF4---PF5---PF6---PF7---PF8---PF9--- !

   9  Schedule !       Help        End   Apply Accpt                         !

  10  Network  +-------------------------------------------------------------+

  11  Network Schedule Overview

  12  Activation Overview




 Command => 1_____________________________________________________________
Enter-PF1---PF2---PF3---PF4---PF5---PF6---PF7---PF8---PF9---PF10--PF11--PF12---
      Help        End   Old                                              Menu
```

Where you can select:

- Owner
- Network
- Job (only reports 1, 2, 3 and 4)
- Report Destination

Owner, Network and Job may be terminated with wildcard characters:

| Wildcard Character | Meaning |
|---|---|
| * | Only select objects for which the name begins with the given prefix. |
| > | Only select objects with a name greater than the given value. |
| < | Only select objects with a name less than the given value. |

 Copyright © Software AG 2003

This allows extremely flexible reporting. On the other hand, it allows you to formulate requests that will cause very many Adabas calls. For this reason, it is possible to disallow wildcard report selection for non-administrator users (see User Profiles). By default, users of type A and O are allowed to use wildcard selection; users of type G are not. It is not possible to disallow it for users of type A.

You can also choose where the report is to be directed:

1. (the default) will write the results to the screen
2. will write the results to Printer 1 (which must be defined appropriately)
3. will write the results to the PC (using Entire Connection and Printer 7)
4. will write the results to a PC work file (using Entire Connection and Work File 7) in comma-separated-variable format, suitable for importing into a spreadsheet package. This destination is only allowed for reports 1, 2, 3, 4, 9, 11 and 12.

When you are satisfied with your selection, press PF5 to move on to the date/time/run range selection window (where applicable) or to produce the report. If you have used the * wildcard for Owner, Network or Job you will then be prompted to select which Owner/Network/Job you are interested in. However, if you press PF4 rather than PF5, you will not be prompted instead the report will include all objects which match your selection criteria.

# Special PF Keys

| Key | Name | Function |
|---|---|---|
| PF3 | End | Return to Reporting Menu. |
| PF4 | Apply | Confirm selection criteria, including * wildcards. |
| PF5 | Accpt | Confirm selection criteria. If any object name has an *, you will be prompted with a list of matching objects, from which you may select one and press PF5 again. |

# Security

Administrator users (and reports run in batch) may report on any network in any owner. Non-administrator users, however, will only receive information on networks to which they have read access. A user is considered to have read access if:

1. The user is linked to owner SYSDBA.
2. The user is linked to the Network owner.
3. Access to the network has been explicitly granted to the user.

# Batch Execution

All new reports may be executed in batch, as well as online. In batch, there are no security restrictions and the only supported destination is Printer 1. Batch execution is described in more detail below.

(Explanations of individual reports are mostly the same as the old reporting descriptions, except for the screens.)

# Job Logs

This subsection covers the following topics:


- Job Logs
- Displaying the Log - Terminated Jobs
- Column Headings: Log Report


---

## Job Logs

The following options on the Reporting Menu offer information on jobs, which is extracted from the Entire Operations Log:

- **Log - Terminated Jobs**
  Displays a log of all jobs that terminated OK.
- **Log - Abended Jobs**
  Displays a log of all jobs that ended abnormally.
- **Log - Jobs not started**
  Displays a log of all jobs that were not started, jobs whose latest start time was exceeded, jobs waiting for input conditions or jobs for which a permanent error has occurred during activation or start.

The following applies to all job logs:

Only those networks are displayed for which the user has read access.

The user has read access, if:

1. the user has profile type **A** (Administrator);
2. the owner SYSDBA is currently assigned to the user;
3. the network owner can be found on the user's owner list;
4. access to the network has been explicitly granted to the user (see the subsection Authorizing Other Users to Access a Network in the section Network Maintenance).

## Displaying the Log - Terminated Jobs

**For example, to display the Log - Terminated Jobs**

1. Type its option number in the Option field on the Reporting Menu. Press Enter.

   The Log - Terminated Jobs screen will appear.

 Copyright © Software AG 2003

```
 06.11.01               *** Entire Operations 4.1.1 ***              17:53:53

 Owner UKSJU   +-------------------------------------------------------------+

 ------------- !                                                             !

               !  Log - Terminated Jobs                                      !

     Reportin !                                                              !

               !  Owner......: Example___    (Blank for all, * for selection  !

   1  Log - Te !  Network....: E5*_______     or * and PF4 to process all     !

   2  Log - Ab !  Job........: __________     matching objects)               !

   3  Log - Jo !                                                             !

   4  Accounti !                                                             !

   5  Network  !  Destination: 1                                             !

   6  Network  !     1 - Screen  2 - Printer  3 - PC  4 - PC-CSV              !

   7  Network  !                                                             !

   8  Network  ! Enter-PF1---PF2---PF3---PF4---PF5---PF6---PF7---PF8---PF9--- !

   9  Schedule !       Help        End   Apply Accpt                         !

  10  Network  +-------------------------------------------------------------+

  11  Network Schedule Overview

  12  Activation Overview




 Command => 1_____________________________________________________________
Enter-PF1---PF2---PF3---PF4---PF5---PF6---PF7---PF8---PF9---PF10--PF11--PF12---
      Help        End   Old                                            Menu
```

2. Enter owner and network for which to display information. You can enter selection criteria with an asterisk *. Press Enter.

   The Date / Run number selection window will be displayed.

```
 06.11.01               *** Entire Operations 4.1.1 ***              17:53:53
 Owner UKSJU   +-------------------------------------------------------------+
 ------------- !                                                             !
               !  Log - Terminated Jobs                                      !
     Reportin  !                                                             !
               !  Owner......: Example___    (Blank for all, * for selection  !
   1  Log - Te !  Network....: E5*_______     or * and PF4 to process all     !
   2  Log - Ab !  Job........: __________     matching objects)               !
   3  Log - Jo !                                                             !
   4  Accounti !                                                             !
   5  Network  !  Destination: 1                                             !
   6  Network  !     1 - Screen  2 - Printer  3 - PC  4 - PC-CSV              !
   7  Network  +-----------------------------------------------------+        !
   8  Network  !                                                     ! -PF9--- !
   9  Schedule !  Log - Terminated Jobs                               !        !
  10  Network  !             Date / Run Number Selection             ! --------+
  11  Network  !                                                     !
  12  Activati !  From Date 06.11.01  00:00   to 06.11.01  23:59     !
               !  From Run  1____             to 99999               !
               !                                                     !
 Command => 1_ !  PF3  End                                           ! __
Enter-PF1---PF +-----------------------------------------------------+ --PF12---
      Help        End   Old                                              Menu
```

Here you may select date, time and run number ranges for which to display the information (default is current date).

3. Enter the required ranges. Press Enter.

   The Entire Operations Log Report screen will appear with a running total of how many log records it has had to read to satisfy your request and displays the results:

 Copyright © Software AG 2003

```
                                                    Entire Operations Log Report
-------------------------------------------------------------------------------


  Owner      Network    Job        Run   Date     Time  Message

  ---------- ---------- ---------- ----- -------- ----- -----------------------


  EAMPLE     E52-LOGRES E52-J01      205 06.11.01 01:00 Ended ok


 ******************************** Bottom of Data ******************************

Enter-PF1---PF2---PF3---PF4---PF5---PF6---PF7---PF8---PF9---PF10--PF11--PF12---
                 End                                       Left  Right Menu
```

This window displays a list of all terminated jobs for Networks beginning from E5 in owner EXAMPLE.

**Notes:**

1. Column headings and PF keys have the same meanings as for the old reports.
2. The display of Log - Abended Jobs and of Log - Jobs not started also has the same format.

# Column Headings: Log Report

Meaning of column headings:

| Column | Description |
|---|---|
| Owner | Owner to whom the network belongs. |
| Network | Network to which the job belongs. |
| Job | Job name as defined to Entire Operations. |
| Date | Date of this event. |
| Time | Time of event. |
| Message | Message text. |

4. Press PF11 (Right) to scroll right and display the full message text.
   Press PF10 (Left) to scroll back to the left.
   Press Enter to scroll down and display more log entries, if there are any.
5. Press PF3 (End) to return to the Reporting Menu.

 Copyright © Software AG 2003

# Network and Job Accounting Data

This subsection covers the following topics:

- Selecting Accounting Data
- Field Descriptions: Date / Run Number Selection
- Column Headings: Job Accounting Data
- Special PF Keys

---

## Selecting Accounting Data

The option Accounting Data on the Reporting Menu offers information on job elapsed times and CPU times of previous network executions.

**To select Accounting Data**

1. Type its option number in the Option field on the Reporting Menu. Press Enter.

   A window opens in which you can enter the owner, network and job for which to display information:

```
 14.11.01               *** Entire Operations 4.1.1 ***              10:59:31
 Owner EXAMPLE +-------------------------------------------------------------+
 ------------- !                                                             !
               !  Job Accounting Data: Selection                             !
     Reportin  !                                                             !
               !  Owner......: UKSJU_____    (Blank for all, * for selection  !
   1  Log - Te !  Network....: W>________     or * and PF4 to process all     !
   2  Log - Ab !  Job........: __________     matching objects)               !
   3  Log - Jo !                                                             !
   4  Accounti !                                                             !
   5  Network  !  Destination: 1                                             !
   6  Network  !     1 - Screen  2 - Printer  3 - PC  4 - PC-CSV              !
   7  Network  !                                                             !
   8  Network  ! Enter-PF1---PF2---PF3---PF4---PF5---PF6---PF7---PF8---PF9--- !
   9  Schedule !       Help        End   Apply Accpt                         !
  10  Network  +-------------------------------------------------------------+
  11  Network Schedule Overview
  12  Activation Overview


 Command => 4_____________________________________________________________
Enter-PF1---PF2---PF3---PF4---PF5---PF6---PF7---PF8---PF9---PF10--PF11--PF12---
      Help        End   Old                                             Menu
```

   This example will display accounting data for all jobs in networks with names greater than W, under owner UKSJU.

2. Press PF4 or PF5 to select the date, time and run number ranges:

```
 14.11.01               *** Entire Operations 4.1.1 ***              10:59:31
 Owner EXAMPLE +-------------------------------------------------------------+
 ------------- !                                                             !
               !  Job Accounting Data: Selection                             !
     Reportin  !                                                             !
               !  Owner......: UKSJU_____    (Blank for all, * for selection  !
   1  Log - Te !  Network....: W>________     or * and PF4 to process all     !
   2  Log - Ab !  Job........: __________     matching objects)               !
   3  Log - Jo !                                                             !
   4  Accounti !                                                             !
   5  Network  !  Destination: 1                                             !
   6  Network  !     1 - Screen  2 - Printer  3 - PC  4 - PC-CSV              !
   7  Network  +-----------------------------------------------------+        !
   8  Network  !                                                     ! -PF9--- !
   9  Schedule !  Job Accounting Data: Selection                     !        !
  10  Network  !             Date / Run Number Selection             ! --------+
  11  Network  !                                                     !
  12  Activati !  From Date 01.11.01  00:00   to 14.11.01  23:59     !
               !  From Run  1____             to 99999               !
               !                                                     !
 Command => 4_ !  PF3  End                                           ! __
Enter-PF1---PF +-----------------------------------------------------+ --PF12---
      Help        End   Old                                             Menu
```

The historical elapsed and cpu times for the selected objects are displayed:

```
 14.11.01               *** Entire Operations 4.1.1 ***              11:09:10
 Owner  UKSJU                  Job Accounting Data          Network WLSJOBS
-------------------------------------------------------------------------------
 Job          Run      JobId Date      Start     Stop    Elapsed min CPU Tm sec
 WLS-JOB01     89      52937 02.11.01  16:05:50  16:06:33       0.71       1.74
 WLS-JOB02     89      52938           16:05:50  16:06:51       1.01       1.75
 WLS-JOB03     89      52939           16:05:50  16:06:31       0.68       1.73
 WLS-JOB04     89      52940           16:05:50  16:06:31       0.68       1.75
 WLS-JOB05     89      52941           16:05:50  16:06:31       0.68       1.74
 WLS-JOB06     89      52942           16:05:50  16:06:31       0.68       1.74
 WLS-JOB07     89      52943           16:06:31  16:07:10       0.65       1.71
 WLS-JOB08     89      52944           16:06:31  16:07:09       0.63       1.70
 WLS-JOB09     89      52945           16:06:31  16:07:09       0.63       1.70
 WLS-JOB10     89      52946           16:06:31  16:07:09       0.63       1.71
 WLS-JOB11     89      52947           16:06:33  16:07:10       0.61       1.69
 WLS-JOB12     89      52948           16:06:51  16:07:13       0.36       1.54
 WLS-JOB01     89      52978           16:11:43  16:12:31       0.80      15.61
 (Network)     89                      16:05:50  16:12:31       6.68      36.11
                                                            ---------- ----------
 Averages from 02.11.01 16:05 to 02.11.01 16:12 are             0.68       2.78
 ************************************* More ************************************
Enter-PF1---PF2---PF3---PF4---PF5---PF6---PF7---PF8---PF9---PF10--PF11--PF12---
                  End   Net               Up    Down                    Menu
```

The screen shows the Owner and Network in the title.

3. Enter the required Owner, Network and Job names. Press Enter.

   Another window opens on the bottom half of the screen:

 Copyright © Software AG 2003

```
 02.11.01               *** Entire Operations 4.1.1 ***               17:14:42
 Owner EXAMPLE +-----------------------------------------------------+  GHH
 ------------- !                                                     ! ---------
               !          Job Accounting Data: Selection             !
     Reportin  !                                                     !
               !  Owner    ===>  EXAMPLE___                           !
   1  Log - Te !  Network  ===>  E60-FLOW__                           !
   2  Log - Ab !  Job      ===>  __________ (empty: whole network)    !
   3  Log - Jo !                                                     !
   4  Accounti !  PF3  End                                           !
   5  Network  +-----------------------------------------------------+
   6  Network Description (detailed)
   7  Network  +-----------------------------------------------------+
   8  Schedule !                                                     !
   9  Network  !  Owner EXAMPLE Network E60-FLOW                     !
  10  Network  !             Date / Run Number Selection             !
               !                                                     !
               !  From Date 01.11.01  00:00   to 02.11.01  17:14    !
               !  From Run  1____             to 99999              !
               !                                                     !
 Command => 4_ !  PF3  End                                           ! __
Enter-PF1---PF +-----------------------------------------------------+ --PF12---
      Help        End                                                   Menu
```

# Field Descriptions: Date / Run Number Selection

The input fields of the Date / Run Number Selection window are described in the following table:

| Field | Description |
|---|---|
| From Date | Enter the date and time from which to display accounting data. |
| to | Enter the date and time until which to display accounting data. |
| From Run ... to | Enter the range of run numbers for which to display accounting data. |

4. Enter the required dates, times and run ranges. Press Enter.

   The following screen appears with the job accounting data:

```
 02.11.01                *** Entire Operations 4.1.1 ***                17:17:10
 Owner  EXAMPLE                 Job Accounting Data           Network E60-FLOW
-------------------------------------------------------------------------------
 Job         Run  JobId  Date      Start     Stop    Elapsed min CPU Time sec
 JOB-01      1234  2007  01.11.01  13:14:06  13:15:06       1.00        0.05
 JOB-019     1234  2012            13:15:27  13:17:27       2.00        0.02
 (Network)   1234                  13:14:06  13:17:27       3.35        0.07

 JOB-01      1276  2332  02.11.01  13:01:08  13:02:08       1.00        0.05
 JOB-012     1276  2336            13:02:28  13:04:28       2.00        0.03
 JOB-019     1276  2337            13:02:30  13:04:30       2.00        0.03
 JOB-013     1276  2340            13:04:44  13:06:44       2.00        0.03
 JOB-014     1276  2349            13:07:00  13:19:01      12.01        0.10
 JOB-015     1276                  13:19:06  13:19:06
 JOB-02      1276  2394            13:19:10  13:20:10       1.00        0.05
 JOB-03      1276                  13:20:36  13:20:37       0.01
 JOB-04      1276  2410            13:20:39  13:22:40       2.01        0.03
 JOB-05      1276                  13:23:00  13:23:00
                                                         ----------  ----------
 Averages from 01.11.01 13:14 to 02.11.01 13:23 are         2.09        0.03
 ************************************* More ************************************
Enter-PF1---PF2---PF3---PF4---PF5---PF6---PF7---PF8---PF9---PF10--PF11--PF12---
                 End   Net               Up    Down
```

# Column Headings: Job Accounting Data

The following table explains the column headings for the data listed on the Network Maintenance screen:

| Column | Explanation |
|---|---|
| Job | Job name as defined to Entire Operations. |
| Run | Run number of the job. |
| JobId | Operating system job identifier. |
| Date | Date when the job started. |
| Start | Time when the job started. |
| Stop | Time when the job stopped. |
| Elapsed min | Elapsed time in minutes. |
| CPU Tm sec | CPU time in seconds. |

When the job name is (Network), the (Network) records in the Job column are network summary records. These contain the start time of the network's first job and the stop time of its last job, as well as its cumulative CPU time in seconds and its total elapsed time in minutes.

Averages fromtoare shows the average values of elapsed and CPU times for all jobs in the network.

5. Press PF8 (Down) to scroll data forwards and PF7 (Up) to scroll backwards.
6. Press PF3 (End) to return to the Reporting Menu.

**Note:**
Running times and CPU times of dummy jobs are not taken account of in this evalutation.

 Copyright © Software AG 2003

# Special PF Keys

| Key | Name | Function |
|---|---|---|
| PF3 | End | Return to the Job Accounting Data: Selection window. |
| PF4 | Net | Toggle between job accounting data and network summary accounting data (see below). |
| PF7 | Up | Display previous screen of data for this network. |
| PF8 | Down | Display next screen of data for this network. If the last screen has already been displayed (Bottom of Data is displayed instead of More), PF8 is named Next and displays the first screen for the next network. If there are no more networks matching the selection criteria, you are returned to the Job Accounting Data: Selection window. |
| PF12 | Menu | Return to the Entire Operations main menu. |

Copyright © Software AG 2003 

# Network Description

This subsection covers the following topics:

- Network Description Options
- Displaying the Network Description (short)
- Displaying the Network Description (detailed)
- Displaying the Network Description (with JCL)
- Field Descriptions: Network Description

---

## Network Description Options

The two Network Description options on the Reporting Menu allow you to display network and job online documentation.

- **Network Description (short)**
  Displays information on networks and jobs as defined on the master data base, including scheduling information, prerequisites and end-of-job checking and actions.
- **Network Description (detailed)**
  Displays the same information as the 'short' version, but includes all prose descriptions defined at the network, job or event level using the Editor facility.

## Displaying the Network Description (short)

**For example, to display the Network Description (short)**

1. Type its option number in the Option field on the Reporting Menu. Press Enter.

   A window opens in which you can enter the owner and the network for which to display information:

```
 06.11.01               *** Entire Operations 4.1.1 ***              18:47:39
 Owner UKSJU   +-------------------------------------------------------------+
 ------------- !                                                             !
               !  Network Description (short)                                !
     Reportin  !                                                             !
               !  Owner......: EXAMPLE___    (Blank for all, * for selection  !
   1  Log - Te !  Network....: __________     or * and PF4 to process all     !
   2  Log - Ab !                              matching objects)               !
   3  Log - Jo !                                                             !
   4  Accounti !                                                             !
   5  Network  !  Destination: 1                                             !
   6  Network  !     1 - Screen  2 - Printer  3 - PC  4 - PC-CSV              !
   7  Network  !                                                             !
   8  Network  ! Enter-PF1---PF2---PF3---PF4---PF5---PF6---PF7---PF8---PF9--- !
   9  Schedule !       Help        End   Apply Accpt                         !
  10  Network  +-------------------------------------------------------------+
  11  Network Schedule Overview
  12  Activation Overview


 Command => 5_____________________________________________________________
Enter-PF1---PF2---PF3---PF4---PF5---PF6---PF7---PF8---PF9---PF10--PF11--PF12---
      Help        End   Old                                              Menu
```

 Copyright © Software AG 2003

**Note:**
Job is not a selection criterion.

2. Enter the owner and network in the selection window. Press Enter.

# Displaying the Network Description (detailed)

```
 14.11.01               *** Entire Operations 4.1.1 ***              11:52:50
 Owner EXAMPLE +-------------------------------------------------------------+
 ------------- !                                                             !
               !  Network Description (detailed)                             !
     Reportin  !                                                             !
               !  Owner......: EXAMPLE___    (Blank for all, * for selection  !
   1 Log - Te  !  Network....: __________     or * and PF4 to process all     !
   2 Log - Ab  !                              matching objects)               !
   3 Log - Jo  !                                                             !
   4 Accounti  !                                                             !
   5 Network   !  Destination: 1                                             !
   6 Network   !     1 - Screen  2 - Printer  3 - PC  4 - PC-CSV             !
   7 Network   !                                                             !
   8 Network   ! Enter-PF1---PF2---PF3---PF4---PF5---PF6---PF7---PF8---PF9--- !
   9 Schedule  !       Help        End   Apply Accpt                         !
  10 Network   +-------------------------------------------------------------+
  11 Network Schedule Overview
  12 Activation Overview


 Command => 6_____________________________________________________________
Enter-PF1---PF2---PF3---PF4---PF5---PF6---PF7---PF8---PF9---PF10--PF11--PF12---
      Help        End   Old                                             Menu
```

There is now a 3rd Network Description option.

# Displaying the Network Description (with JCL)

Displays the same information as the detailed report and additionally prints out the JCL of each job with JCL location BS2, LMS, NAT, PDS, LIB or VSE. Please note that, for security reasons, no Entire System Server logons are performed. This means that the user must already have logged on to each node containing JCL (or the node must be started with the AUTOLOG=YES parameter).

- Example 1
- Example 2

```
 14.11.01               *** Entire Operations 4.1.1 ***              11:53:56
 Owner EXAMPLE +-------------------------------------------------------------+
 ------------- !                                                             !
               !  Network Description (with JCL)                             !
     Reportin  !                                                             !
               !  Owner......: EXAMPLE___    (Blank for all, * for selection  !
   1 Log - Te  !  Network....: __________     or * and PF4 to process all     !
   2 Log - Ab  !                              matching objects)               !
   3 Log - Jo  !                                                             !
   4 Accounti  !                                                             !
   5 Network   !  Destination: 1                                             !
   6 Network   !     1 - Screen  2 - Printer  3 - PC  4 - PC-CSV             !
   7 Network   !                                                             !
   8 Network   ! Enter-PF1---PF2---PF3---PF4---PF5---PF6---PF7---PF8---PF9--- !
   9 Schedule  !       Help        End   Apply Accpt                         !
  10 Network   +-------------------------------------------------------------+
  11 Network Schedule Overview
  12 Activation Overview



 Command => 7_____________________________________________________________
Enter-PF1---PF2---PF3---PF4---PF5---PF6---PF7---PF8---PF9---PF10--PF11--PF12---
      Help        End   Old                                             Menu
```

# Example Screens for JCL

## Example 1

 Copyright © Software AG 2003

```
14/11/01                      Entire Operations                      12:07:04

Network  E10-PAR-01         Network Documentation            Owner  EXAMPLE

Job      E10-J01

--------------------------------------------------------------------------------

Job: E10-J01     Type JOB PDS      Description: 1st sequential job

Location   :  NAT

DSN/Library:  EOR-T321                                      Member: E10-J01

Node       :  146


Schedule Parameters          Send Late Message To

------------------------     --------------------

Earliest Start:

Latest Start  :

Deadline      :

Elapsed Time  : 0.04


JCL for E10-J01 follows









Enter-PF1---PF2---PF3---PF4---PF5---PF6---PF7---PF8---PF9---PF10--PF11--PF12---
                  End                                                    Menu
```

## Example 2

```
14/11/01                      Entire Operations                      12:07:44

Network  E10-PAR-01         Network Documentation            Owner  EXAMPLE

Job      E10-J01

--------------------------------------------------------------------------------

//EORE10J1 JOB @UID,CLASS=@CLASS,MSGCLASS=@MSGCLASS,MSGLEVEL=(1,1)

//* ***************************

//* JOB ENDED OK COND CODE 0000

//* ***************************

//JOBLIB  DD    DSN=@JOBLIB,DISP=SHR

//STEP01   EXEC  PGM=NOPCONTI

//

Enter-PF1---PF2---PF3---PF4---PF5---PF6---PF7---PF8---PF9---PF10--PF11--PF12---
                 End                                                     Menu
```

# Field Descriptions: Network Description

Meaning of the input fields:

| Field | Description |
|---|---|
| Owner | Display networks belonging to this owner. Press Enter to select all owners. Enter an asterisk * and press Enter to display a selection list of owner names, or enter XX* and press Enter to list owner names with prefix XX. |
| Network | Network name. Press Enter to select all networks. Enter an asterisk * and press Enter to display a selection list of network names, or enter XX* and press Enter to list network names with prefix XX. |

 Copyright © Software AG 2003

A window opens at the bottom of the screen:

```
   6  Network Descriptio !                                          !
   7  Network Job Flow D !  PF3 End                                 !
   8  Schedule of Jobs   +-----------------------------------------+
   9  Network Activation Summary
  10  Network Schedule Overview
                         +-----------------------------------------+
                         !                                         !
                         !      Send Output to Printer ?  N (Y/N)  !
                         !                                         !
 Command => 5___________ +-----------------------------------------+
Enter-PF1---PF2---PF3---PF4---PF5---PF6---PF7---PF8---PF9---PF10--PF11--PF12---
      Help        End                                                 Menu
```

3. If you enter **Y** and press Enter, output is printed.
   If you enter **N** and press Enter, the Network Description appears on the screen.

   The network information appears on your screen or is printed in the following format:

```
  02.11.01                   Entire Operations 4.1.1                   17:23:17
  Network  TESTNET            Network Documentation            Owner  GFR
  Job
  ------------------------------------------------------------------------------
  Description   :
  Execution Node: 148

  Schedule Times              Send Late Message to
  --------------              --------------------
  Earliest Start: 09:15:00
  Latest Start  : 11:00:00
  Deadline      : 12:30:00
  ****

  ... Job Description on the following Pages





 Enter-PF1---PF2---PF3---PF4---PF5---PF6---PF7---PF8---PF9---PF10--PF11--PF12---
                   End                                                 Menu
```

   The information reflects the network parameters as defined in the Network Maintenance facility.

4. Press Enter to display information on the first job in the network.

   Job information is presented in a format similar to the following:

```
02.11.01                    Entire Operations 4.1.1                    17:23:43
Network  TESTNET             Network Documentation            Owner  GFR
Job      HANS
-------------------------------------------------------------------------------
Job: HANS        Type JOB PDS      Description:
Location   :  PDS
DSN/Library:  SN.GFR.SOURCE                                  Member: HANS
Node       :  148

Schedule Parameters          Send Late Message To
------------------------     --------------------
Earliest Start: 09:15:00
Latest Start  : 11:00:00
Deadline      : 12:30:00
Elapsed Time  :



Input Conditions
----------------

Enter-PF1---PF2---PF3---PF4---PF5---PF6---PF7---PF8---PF9---PF10--PF11--PF12---
                  End                                                     Menu
```

The information reflects the job parameters as defined in the Job Maintenance facility.

5. Press Enter to display the next page of information.

   You can display all job definitions for the specified network. If you selected the Network Description (detailed) option, the long prose description is also displayed.

6. Press PF3 (End) to return to the Reporting Menu.

 Copyright © Software AG 2003

# Network Job Flow Display

The Network Job Flow Display option provides a short overview of the job flow within a network. The output can be sent to the screen or printed.

**To invoke the Network Job Flow Display**

1. Type its option number in the Option field on the Reporting Menu. Press Enter.

   A window opens in which you can enter the owner and the network for which to display information:

```
 06.11.01               *** Entire Operations 4.1.1 ***              18:48:35

 Owner UKSJU   +-------------------------------------------------------------+

 ------------- !                                                             !

               !  Network Job Flow Display                                   !

     Reportin  !                                                             !

               !  Owner......: UKSJU_____    (Blank for all, * for selection  !

   1  Log - Te !  Network....: __________     or * and PF4 to process all     !

   2  Log - Ab !                              matching objects)               !

   3  Log - Jo !                                                             !

   4  Accounti !                                                             !

   5  Network  !  Destination: 1                                             !

   6  Network  !     1 - Screen  2 - Printer  3 - PC  4 - PC-CSV              !

   7  Network  !                                                             !

   8  Network  ! Enter-PF1---PF2---PF3---PF4---PF5---PF6---PF7---PF8---PF9--- !

   9  Schedule !       Help        End   Apply Accpt                         !

  10  Network  +-------------------------------------------------------------+

  11  Network Schedule Overview

  12  Activation Overview




  Command => 8_____________________________________________________________
 Enter-PF1---PF2---PF3---PF4---PF5---PF6---PF7---PF8---PF9---PF10--PF11--PF12---
      Help        End   Old                                              Menu
```

**Note:**
Job is not a selection criterion.

The selection fields are preset with '*'. This causes an object selection to be displayed after Enter is displayed. If all objects are to be selected, the corresponding selection field must be deleted.

The contents of the output fields result in the following:

| Owner | Network | Selection |
|---|---|---|
| empty | empty | All owners und networks are displayed. |
| filled | empty | All networks for the selected owner are displayed. |
| filled | * | Network selection for the selected owner is invoked. |

Network selection is only executed, if an owner has already been selected.

2. Enter the Owner and Network in the selection window. Press Enter.

   A window opens at the bottom of the screen in which you are asked Send Output to Printer?

3. If you enter **Y** and press Enter, output is printed on printer assigned to Workfile 1.
   If you enter **N** and press Enter, the Job Flow screen appears, for example:

```
MORE
 02.11.01                    Entire Operations 4.1.1                    17:16:44
                Job Flow of Network E60-FLOW   Owner EXAMPLE          Page    1

      Job       by Condition            from/to Job     Owner       Network
 ---------------------------------------------------------------------------
(1)   JOB-01
        I       E60-JOB1-O
        +-----> E60-JOB1-O -----------> (11)  JOB-019
(2)   JOB-012
        I       E60-J012-O
(3)   JOB-013
        I       E60-J013-O
(4)   JOB-014
        I       E60-J014-O
(5)   JOB-015
        I       E60-J015-O
        +<----- E60-J019-O <----------- (11)  JOB-019
(6)   JOB-02
        I       E60-JOB2-O1
(7)   JOB-03
```

## Notes on the above list:

- Each job is identified by a sequence number.
- Direct successor jobs appear in vertical order.
- If the direct sequence is interrupted, a horizontal line is printed.
- If a successor cannot be shown indirectly, an arrow --> points from the left.
- If a predecessor cannot be shown directly, an arrow <-- points from the right.
- The linking conditions are shown on the right-hand side of the screen.
- Input conditions dependent on files and dependent on job variables (BS2000) are displayed.

4. Press Enter to display the next screen, if there is more data.
5. Press PF3 (End) to return to the Reporting Menu.

 Copyright © Software AG 2003

# Jobs Schedule

This subsection covers the following topics:

- Invoking the Jobs Schedule
- Column Headings: Production Plan

---

## Invoking the Jobs Schedule

The Jobs Schedule option on the Reporting Menu displays a jobs schedule for a specific date range.

**To invoke the Jobs Schedule**

1. Type its option number in the Option field on the Reporting Menu. Press Enter.

   A window opens in which you can specify a date range:

```
 06.11.01               *** Entire Operations 4.1.1 ***              18:49:50

 Owner UKSJU   +-------------------------------------------------------------+

 ------------- !                                                             !

               !  Schedule of Jobs                                           !

     Reportin  !                                                             !

               !  Owner......: UKSJU_____    (Blank for all, * for selection  !

   1  Log - Te !  Network....: __________     or * and PF4 to process all     !

   2  Log - Ab !                              matching objects)               !

   3  Log - Jo !                                                             !

   4  Accounti !                                                             !

   5  Network  !  Destination: 1                                             !

   6  Network  !     1 - Screen  2 - Printer  3 - PC  4 - PC-CSV              !

   7  Network  !                                                             !

   8  Network  ! Enter-PF1---PF2---PF3---PF4---PF5---PF6---PF7---PF8---PF9--- !

   9  Schedule !       Help        End   Apply Accpt                         !

  10  Network  +-------------------------------------------------------------+

  11  Network Schedule Overview

  12  Activation Overview




 Command => 9_____________________________________________________________
Enter-PF1---PF2---PF3---PF4---PF5---PF6---PF7---PF8---PF9---PF10--PF11--PF12---
      Help        End   Old                                             Menu
```

**Note:**
Job is not a selection criterion.

2. After selecting Owner and Network, you can select a date range which may not exceed 31 days.
   Enter the Start Date and End Date required and press Enter.

   The following window opens:

 Copyright © Software AG 2003

```
 06.11.01               *** Entire Operations 4.1.1 ***               18:49:50
 Owner UKSJU   +-------------------------------------------------------------+
 ------------- !                                                             !
               !  Schedule of Jobs                                           !
     Reportin  !                                                             !
               !  Owner......: UKSJU_____    (Blank for all, * for selection  !
   1  Log - Te !  Network....: __________     or * and PF4 to process all     !
   2  Log - Ab !                              matching objects)               !
   3  Log - Jo !                                                             !
   4  Accounti !                                                             !
   5  Network  !  Destination: 1                                             !
   6  Network  !     1 - Screen  2 - Printer  3 - PC  4 - PC-CSV              !
   7  Network  !                +---------------------------------------+     !
   8  Network  ! Enter-PF1---PF !                                       ! --- !
   9  Schedule !       Help     !  Schedule of Jobs                      !     !
  10  Network  +--------------- !                                       ! ----+
  11  Network Schedule Overview !      Start Date  ===> 06.11.01        !
  12  Activation Overview       !                                       !
                                !      End Date    ===> 06.11.01        !
                                !                                       !
 Command => 9_________________  !  Enter                     PF3 End    !
Enter-PF1---PF2---PF3---PF4---P +---------------------------------------+ 12---
      Help        End   Old                                             Menu
```

3. Enter owner and network for which to display information. You can enter selection criteria with an asterisk *. Press Enter.

   A window opens at the bottom of the screen:

```
   6  Network Descriptio !                                          !
   7  Network Job Flow D !  PF3 End                                 !
   8  Schedule of Jobs   +-----------------------------------------+
   9  Network Activation Summar !  Schedule of Jobs                !
  10  Network Schedule Overview !                                  !
                        +-----------------------------------------+
                        !                                         !
                        !      Send Output to Printer ?  N (Y/N)  !
                        !                                         !
 Command => 8___________ +-----------------------------------------+
Enter-PF1---PF2---PF3---PF4---P +---------------------------------------+ 12---
      Help        End                                                   Menu
```

4. If you enter **Y** and press Enter, output is printed.
   If you enter **N** and press Enter, the schedule appears on the screen.

   A schedule for the given range appears on your screen or is printed in the following format:

```
 02.11.01               *** Entire Operations 4.1.1 ***              17:33:52
                    Production Plan 02.11.01 thru 02.11.01
-------------------------------------------------------------------------------
02.11.01
  Owner     Network      Job            Description        Start  Elapsed
---------- ---------- ---------- ------------------------- ----- ----------

ASF        ASF-COPY   JOB-01                                00:00
                      LMS-JOB

EXAMPLE    E40-REC-01 E40-J01    Run is always okay
                      E40-J02    ABEND=SE37 1st run
                      E40-J03    Run only after recovery
                      E40-J99999 Reset all conditions

SN         A-1        HUGO-1
                      HUGO-2                                05:00
                      IMP-TEST                              00:00

           DEMO-NET   JOB1       firST-JOB                  09:15

Enter-PF1---PF2---PF3---PF4---PF5---PF6---PF7---PF8---PF9---PF10--PF11--PF12---
                  End                             Down                    Menu
```

5. Press PF8 (Down) or Enter to scroll down the schedule.
6. Press PF3 (End) to return to the Reporting Menu.

# Column Headings: Production Plan

Meaning of column headings:

| Field | Description |
|---|---|
| Owner | Owner name of job. |
| Network | Network name of job. |
| Job | Job name. |
| Description | Short description of job as defined in job definition. |
| Start | Scheduled starting time of job. |
| Elapsed | Estimated running time of job. |

 Copyright © Software AG 2003

# Network Start Summary

This function produces a status report of all network starts for a given day, regardless of whether they:

- are waiting for prerequisite resources;
- have already been executed;
- are currently being executed;
- have already been completed.

**To display the Network Start Summary**

1. Type its option number in the Option field on the Reporting Menu. Press Enter.

   The following windows open:

```
 06.11.01               *** Entire Operations 4.1.1 ***              18:57:58

 Owner UKSJU   +-------------------------------------------------------------+

 ------------- !                                                             !

               !  Network Start Summary                                      !

     Reportin  !                                                             !

               !  Owner......: UKSJU_____    (Blank for all, * for selection  !

   1  Log - Te !  Network....: __________     or * and PF4 to process all     !

   2  Log - Ab !                              matching objects)               !

   3  Log - Jo !                                                             !

   4  Accounti !                                                             !

   5  Network  !  Destination: 1                                             !

   6  Network  !     1 - Screen  2 - Printer  3 - PC  4 - PC-CSV              !

   7  Network  !                                                             !

   8  Network  ! Enter-PF1---PF2---PF3---PF4---PF5---PF6---PF7---PF8---PF9--- !

   9  Schedule !       Help        End   Apply Accpt                         !

  10  Network  +-------------------------------------------------------------+

  11  Network Schedule Overview

  12  Activation Overview




  Command => 10_____________________________________________________________
 Enter-PF1---PF2---PF3---PF4---PF5---PF6---PF7---PF8---PF9---PF10--PF11--PF12---
       Help        End   Old                                             Menu
```

**Note:**
Job is not a selection criterion. After selecting Owner and Network, you can select a date range.

2. Enter the date for which to compile the summary. This can be any date in the past, present or future. Press Enter.

   The following window opens:

```
 06.11.01               *** Entire Operations 4.1.1 ***              18:57:58
 Owner UKSJU   +-------------------------------------------------------------+
 ------------- !                                                             !
               !  Network Start Summary                                      !
     Reportin  !                                                             !
               !  Owner......: UKSJU_____    (Blank for all, * for selection  !
   1  Log - Te !  Network....: __________     or * and PF4 to process all     !
   2  Log - Ab !                              matching objects)               !
   3  Log - Jo !                                                             !
   4  Accounti !                                                             !
   5  Network  !  Destination: 1                                             !
   6  Network  !     1 - Screen  2 - Printer  3 - PC  4 - PC-CSV              !
   7  Network  !                +---------------------------------------+    !
   8  Network  ! Enter-PF1---PF !                                       ! --- !
   9  Schedule !       Help     !  Network Start Summary                 !    !
  10  Network  +-------------- !                                       ! ----+
  11  Network Schedule Overview !      Start Date  ===> 01.11.01        !
  12  Activation Overview       !                                       !
                                !      End Date    ===> 06.11.01        !
                                !                                       !
 Command => 10_________________ !  Enter                    PF3 End     !
Enter-PF1---PF2---PF3---PF4---P +---------------------------------------+ 12---
      Help        End   Old                                             Menu
```

3. Enter owner and network for which to display information. You can enter selection criteria with an asterisk *. Press Enter.

   A window opens at the bottom of the screen in which you are asked Send Output to Printer?:

```
   6  Network Descriptio !                                              !
   7  Network Job Flo +- !  PF3 End                                     !
   8  Schedule of Job !  +-------------------------------------------+
   9  Network Activat !     Please enter the Date for the Report       !
  10  Network Schedul !                                                 !
                      !  +-------------------------------------------+
                      !  !                                             !
                      !  !      Send Output to Printer ?  N (Y/N)      !
                      +- !                                             !
 Command => 9__________ +-------------------------------------------+
Enter-PF1---PF2---PF3---PF4---PF5---PF6---PF7---PF8---PF9---PF10--PF11--PF12---
      Help        End                                                   Menu
```

4. If you enter **Y** and press Enter, output is printed on the printer assigned to Workfile 1. If you enter **N** and press Enter, the Network Start Summary screen appears, for example:

 Copyright © Software AG 2003

```
06.11.01                    Entire Operations                        19:22:09

                 Network Start Summary for 01.11.01 thru 06.11.01      Page    1

  ------------------------------------------------------------------------------


  UKSJU      WLSJOBS

  ---------------------
  (  89) 02.11 16:00             Network Activation

         02.11 16:00             EOR2941 - Network Act. sched. on 02.11.01 at 16

         02.11 16:00             Symbol Prompting in Progress

         02.11 16:00             Symbol Prompting by UKSJU

         02.11 16:00             Symbol Table WLS activated

         02.11 16:00             Symbol Prompt Standard Routine used

         02.11 16:00             Symbol Prompting finished

         02.11 16:01             Act.Symbols modified by SYPG-SN1

         02.11 16:01             Activation Net 02.11 16:00

         02.11 16:01  WLS-JOB01  Awaiting JCL Load

         02.11 16:01  WLS-JOB02  Awaiting JCL Load

         02.11 16:01  WLS-JOB03  Awaiting JCL Load

         02.11 16:01  WLS-JOB04  Awaiting JCL Load

         02.11 16:01  WLS-JOB05  Awaiting JCL Load





 MORE
```

5. Press Enter to display the next screen, if there is more data.
6. Press PF3 (End) to return to the Reporting Menu.

**Note:**
For networks that terminate error-free, only those jobs are displayed that have no successors in the same network.

# Network Schedule Overview

This subsection covers the following topics:

- Creating the Network Schedule Overview
- Use of Wildcards
- Field Descriptions: Network Schedule Overview - Windows
- Column Headings: Network Schedule Overview - Screen

## Creating the Network Schedule Overview

This function enables you to create an overview of scheduled and/or not yet executed, system-wide network activations.

You can create the overview according to the following criteria:

- Extractions and/or schedule
- Owner
- Network
- Starting date
- Ending date

**Note:**
The starting and ending dates can be in the past. In this case, only those network activations are logged, which have not yet been executed. These can be caused by symbol prompting, which has not been completed, or by an Entire Operations Monitor, that has not been active over an extended period of time.

**To create the Network Schedule Overview**

1. Type its option number in the Option field on the Reporting Menu. Press Enter.

   The Network Schedule Overview: Type window opens:

```
 14.11.01               *** Entire Operations 4.1.1 ***               12:19:35
 Owner EXAMPLE                    Reporting Menu                User ID UKSJU
 ------------------ +-------------------------------------------------------+
                    !                                                       !
     Reporting Men !   Network Schedule Overview: Type                     !
                    !                                                       !
   1  Log - Termina !  A Extractions + Schedule, sorted by network, time    !
   2  Log - Abended !  B Extractions only,       sorted by network, time    !
   3  Log - Jobs no !  C Extractions only,       sorted by time             !
   4  Accounting Da !                                                       !
   5  Network Descr !  Type    ==> A                                        !
   6  Network Descr !                                                       !
   7  Network Descr !  Enter------PF3-----------------------------------    !
   8  Network Job F !             End                                       !
   9  Schedule of J +-------------------------------------------------------+
  10  Network Start Summary
  11  Network Schedule Overview
  12  Activation Overview


 Command => 11_____________________________________________________________
Enter-PF1---PF2---PF3---PF4---PF5---PF6---PF7---PF8---PF9---PF10--PF11--PF12---
      Help        End   Old                                             Menu
```

 Copyright © Software AG 2003

2. Select the report type of your choice and press Enter (see Field Descriptions following).

   The following window will appear:

```
 14.11.01               *** Entire Operations 4.1.1 ***               12:19:35

 Owner EXAMPLE +-------------------------------------------------------------+

 ------------- !                                                             !

               !  Network Schedule Overview                                  !

     Reportin !                                                              !

               !  Owner......: EXAMPLE___    (Blank for all, * for selection  !

   1  Log - Te !  Network....: __________     or * and PF4 to process all     !

   2  Log - Ab !                              matching objects)               !

   3  Log - Jo !                                                              !

   4  Accounti !                                                              !

   5  Network  !  Destination: 1                                              !

   6  Network  !     1 - Screen  2 - Printer  3 - PC  4 - PC-CSV              !

   7  Network  !                                                              !

   8  Network  ! Enter-PF1---PF2---PF3---PF4---PF5---PF6---PF7---PF8---PF9--- !

   9  Schedule !       Help        End   Apply Accpt                          !

  10  Network  +-------------------------------------------------------------+

  11  Network Schedule Overview

  12  Activation Overview




 Command => 11_____________________________________________________________

Enter-PF1---PF2---PF3---PF4---PF5---PF6---PF7---PF8---PF9---PF10--PF11--PF12---
      Help        End   Old                                              Menu
```

3. Enter selection criteria for owner and network and destination (see Field Descriptions following). Press Enter.

   The Date Range window will appear:

```
 14.11.01               *** Entire Operations 4.1.1 ***              12:23:59
 Owner EXAMPLE +-------------------------------------------------------------+
 ------------- !                                                             !
               !  Network Schedule Overview                                  !
     Reportin  !                                                             !
               !  Owner......: EXAMPLE___    (Blank for all, * for selection  !
   1  Log - Te !  Network....: __________     or * and PF4 to process all     !
   2  Log - Ab !                              matching objects)               !
   3  Log - Jo !                                                             !
   4  Accounti !                                                             !
   5  Network  !  Destination: 1                                             !
   6  Network  !     1 - Screen  2 - Printer  3 - PC  4 - PC-CSV              !
   7  Network  !                +---------------------------------------+    !
   8  Network  ! Enter-PF1---PF !                                       ! --- !
   9  Schedule !       Help     !  Network Schedule Overview             !    !
  10  Network  +--------------- !                                       ! ----+
  11  Network Schedule Overview !      Start Date  ===> 14.11.01        !
  12  Activation Overview       !                                       !
                                !      End Date    ===> 21.11.01        !
                                !                                       !
 Command => 11_________________ !  Enter                    PF3 End     !
Enter-PF1---PF2---PF3---PF4---P +---------------------------------------+ 12---
      Help        End   Old                                             Menu
```

4. Select the date range and press Enter.

   The resulting screen will take the following form.

 Copyright © Software AG 2003

```
14.11.01                    Entire Operations                       12:24:44

  Owner   EXAMPLE

  Network E52-LOGRES   Schedule from 14.11.01 thru 21.11.01           Page    1


             Date     Time   Owner      Network     Run  Type

  ------------------------------------------------------------------------------

  Wednesday  14.11.01 08:00  EXAMPLE    E52-LOGRES       Schedule, periodic

  Thursday   15.11.01 08:00  EXAMPLE    E52-LOGRES       Schedule, periodic

  Friday     16.11.01 08:00  EXAMPLE    E52-LOGRES       Schedule, periodic

  Saturday   17.11.01 08:00  EXAMPLE    E52-LOGRES       Schedule, periodic

  Sunday     18.11.01 08:00  EXAMPLE    E52-LOGRES       Schedule, periodic


  Monday     19.11.01 08:00  EXAMPLE    E52-LOGRES       Schedule, periodic

  Tuesday    20.11.01 08:00  EXAMPLE    E52-LOGRES       Schedule, periodic

  Wednesday  21.11.01 08:00  EXAMPLE    E52-LOGRES       Schedule, periodic

  ------------------------------------------------------------------------------









 MORE
```

# Use of Wildcards

If one of the selection fields contains the character '*', then a selection map will open for this field after pressing Enter.

Pressing PF4 (Apply) causes **all** objects to appear in the report which correspond to the wildcard.

# Field Descriptions: Network Schedule Overview - Windows

This table describes the input fields of the Network Schedule Overview windows:

| Field | Description | |
|---|---|---|
| Type | Enter an overview type. Possible values: | |
| | **A** | Schedule extractions and schedule, sorted according to network and time. |
| | **B** | Schedule extractions only, sorted according to network and time. |
| | **C** | Schedule extractions only, sorted according to time. |
| Owner | Enter network owner. If the field contains an '*' somewhere, the owner can be selected in a selection window. | |
| Network | Enter network name. If the field contains an '*' somewhere, the network can be selected in a selection window. | |
| Start Date | Enter the date from which to start the overview. | |
| End Date | Enter the date on which to end the overview. | |

5. Press Enter.

   A window opens at the bottom of the screen:

```
 01.11.01               *** Entire Operations 4.1.1 ***               15:39:03
 Owner EXAMPLE                    Reporting M +-------------------------+
 ------------------------------------------- !                         ! ------
                                             !                         !
      Reporting Menu                         !   Owner    EXAMPLE      !
                     +-------------------------------------------------------+
   1  Log - Termina !                                                       !
   2  Log - Abended !   Network Schedule Overview                          !
   3  Log - Jobs no !                                                       !
   4  Accounting Da !  Type    ==> A                                       !
   5  Network Descr !  Owner   ==> EXAMPLE___   * Select or Blank for all   !
   6  Network Descr !  Network ==> E60-FLOW__   * Select or Blank for all   !
   7  Network Job F !           +-------------------------------------+    !
   8  Schedule of J +---------- !                                     ! ----+
   9  Network Start Summary     !  Network Schedule Overview            !
  10  Network Schedule Overview !                                       !
                                !      Start Date  ===> 01.11.01        !
                                !                                       !
                                !      End Date    ===> 01.11.01        !
                                !                                       !
 Command => 10_________________ !  Enter                    PF3 End     !
Enter-PF1---PF2---PF3---PF4---P +-------------------------------------+ 12---
      Help        End                                                   Menu
```

6. Enter starting and ending date in the fields provided. Press Enter.

   A window opens at the bottom of the screen in which you are asked Send Output to Printer?

7. If you enter **Y** and press Enter, output is printed on printer assigned to Workfile 1..
   If you enter **N** and press Enter, the following screen appears, for example, if you selected Type **A** (extractions and schedule, sorted according to network and time):

 Copyright © Software AG 2003

```
02.11.01                  Entire Operations 4.1.1                    15:56:57
Owner   ASF
Network ASF-COPY     Schedule from 02.11.01 thru 02.11.01            Page    1

           Date     Time   Owner      Network     Run  Type
-------------------------------------------------------------------------------
Friday     02.11.01 00:00  ASF        ASF-COPY         Schedule, periodic
-------------------------------------------------------------------------------
Friday     02.11.01 20:30  DQA        QAC01VERCM    2  Schedule, active
-------------------------------------------------------------------------------
Friday     02.11.01 14:00  EXAMPLE    E40-REC-01       Schedule, periodic
Friday     02.11.01 16:00  EXAMPLE    E40-REC-01 1031  Schedule, active
-------------------------------------------------------------------------------
Friday     02.11.01 12:00  EXAMPLE    E50-USRT         Schedule, periodic
Friday     02.11.01 13:00  EXAMPLE    E50-USRT         Schedule, periodic
Friday     02.11.01 14:00  EXAMPLE    E50-USRT         Schedule, periodic
-------------------------------------------------------------------------------
Friday     02.11.01 00:00  EXAMPLE    E60-FLOW         Schedule, periodic
-------------------------------------------------------------------------------
Friday     02.11.01 16:00  EXAMPLE    E70-MSG     266  Schedule, active



MORE
```

If you selected Type **B** (extractions only, sorted according to network and time), the following screen appears, for example:

```
02.11.01                 Entire Operations 4.1.1                     15:58:25
Owner   DQA
Network QAC01VERCM   Schedule from 02.11.01 thru 31.07.96            Page    1

           Date     Time   Owner      Network     Run  Type
-------------------------------------------------------------------------------
Friday     02.11.01 20:30  DQA        QAC01VERCM    2  Schedule, active
-------------------------------------------------------------------------------

Monday     05.11.01 10:00  EXAMPLE    B60-FLOW     47  Aw. Symbol Prompting

Thursday   15.11.01 10:00  EXAMPLE    B60-FLOW     44  Schedule, active
-------------------------------------------------------------------------------
Sunday     04.11.01 14:30  EXAMPLE    E20-DYN-01  211  Schedule, active

Tuesday    06.11.01 14:30  EXAMPLE    E20-DYN-01  212  Schedule, active
-------------------------------------------------------------------------------
Friday     09.11.01 16:00  EXAMPLE    E40-REC-01 1031  Schedule, active

Tuesday    13.11.01 14:00  EXAMPLE    E40-REC-01 1032  Schedule, active



MORE
```

Or, if you selected Type **C** (extractions only, sorted according to time), the following screen appears, for example:

```
02.11.01                  Entire Operations 4.1.1                    15:59:56
Owner
Network              Schedule from 02.11.01 thru 02.11.01           Page    1

           Date     Time   Owner      Network     Run  Type
-------------------------------------------------------------------------------
Friday     02.11.01 00:00  GFR        ZEITR        85  Aw. Symbol Prompting
Friday     02.11.01 16:00  EXAMPLE    E40-REC-01 1031  Schedule, active
Friday     02.11.01 16:00  EXAMPLE    E70-MSG     266  Schedule, active
Friday     02.11.01 16:40  SN         RZF-02      181  Schedule, active
Friday     02.11.01 17:00  SN         A-1         754  Schedule, active
Friday     02.11.01 17:00  SN         A-2         152  Aw. Symbol Prompting
Friday     02.11.01 20:30  DQA        QAC01VERCM    2  Schedule, active

***** End of Report *****
```

8. Press Enter to display the next screen, if there is more data.

# Column Headings: Network Schedule Overview - Screen

The following table explains the column headings for the data listed on the Network Schedule Overview screen:

| Column | Description |
|---|---|
| Date | Date of the scheduled activation. |
| Time | Time of the scheduled activation. |
| Owner | Owner of the network to be activated. Use an asterisk * to enter selection criteria for the owners. |
| Network | Network name. Use an asterisk * to enter selection criteria for the networks. |
| Run | Run number of the network. |
| Type | Current status of the network. For an explanation of the messages that appear here, see Messages in Active Job Display. |

 Copyright © Software AG 2003

# Activation Overview

This subsection covers the following topics:

- Invoking Activation Overview
- Column Headings
- Special PF Keys
- Left and Right Scrolling

---

## Invoking Activation Overview

This function enables you to create an overview of network activations.

**To create the Activation Overview**

1. Type its option number in the Option field on the Reporting Menu. Press Enter.

   The Activation Overview: Type window opens:

```
 14.11.01               *** Entire Operations 4.1.1 ***               14:30:29
 Owner UKSJU   +-------------------------------------------------------+ KSJU
 ------------- !                                                       ! -------
               !              Activation Overview: Type                !
     Reportin  !                                                       !
               !  Select one or more of these Activation Types:        !
   1 Log - Te  !  * All types              A API                       !
   2 Log - Ab  !  M Manual                 O EOJ                       !
   3 Log - Jo  !  R Recovery               S Scheduled                 !
   4 Accounti  !                                                       !
   5 Network   !  Type    ==> *_______                                 !
   6 Network   !                                                       !
   7 Network   !  Enter------PF3-----------------------------------    !
   8 Network   !             End                                       !
   9 Schedule  +-------------------------------------------------------+
  10 Network Start Summary
  11 Network Schedule Overview
  12 Activation Overview


 Command => 12_____________________________________________________________
Enter-PF1---PF2---PF3---PF4---PF5---PF6---PF7---PF8---PF9---PF10--PF11--PF12---
      Help        End   Old                                            Menu
```

2. Enter the activation types.

   The Activation Overview window will be displayed.

```
 14.11.01               *** Entire Operations 4.1.1 ***              14:33:48

 Owner UKSJU   +-------------------------------------------------------------+

 ------------- !                                                             !

               !  Activation Overview                                        !

     Reportin !                                                              !

               !  Owner......: UKSJU_____    (Blank for all, * for selection  !

   1  Log - Te !  Network....: __________     or * and PF4 to process all     !

   2  Log - Ab !                              matching objects)               !

   3  Log - Jo !                                                              !

   4  Accounti !                                                              !

   5  Network  !  Destination: 1                                              !

   6  Network  !     1 - Screen  2 - Printer  3 - PC  4 - PC-CSV              !

   7  Network  !                                                              !

   8  Network  ! Enter-PF1---PF2---PF3---PF4---PF5---PF6---PF7---PF8---PF9--- !

   9  Schedule !       Help        End   Apply Accpt                          !

  10  Network  +-------------------------------------------------------------+

  11  Network Schedule Overview

  12  Activation Overview




 Command => 12_____________________________________________________________
Enter-PF1---PF2---PF3---PF4---PF5---PF6---PF7---PF8---PF9---PF10--PF11--PF12---
      Help        End   Old                                             Menu
```

3. Enter Owner, Network and Destination and press Enter.

   The Date / Run Number Selection window will appear.

 Copyright © Software AG 2003

```
 14.11.01               *** Entire Operations 4.1.1 ***              14:33:48

 Owner UKSJU   +-------------------------------------------------------------+

 ------------- !                                                             !

               !  Activation Overview                                        !

     Reportin  !                                                             !

               !  Owner......: UKSJU_____    (Blank for all, * for selection  !

   1  Log - Te !  Network....: __________     or * and PF4 to process all     !

   2  Log - Ab !                              matching objects)               !

   3  Log - Jo !                                                             !

   4  Accounti !                                                             !

   5  Network  !  Destination: 1                                             !

   6  Network  !     1 - Screen  2 - Printer  3 - PC  4 - PC-CSV              !

   7  Network  +-----------------------------------------------------+        !

   8  Network  !                                                   ! -PF9--- !

   9  Schedule !  Activation Overview                               !         !

  10  Network  !             Date / Run Number Selection            ! --------+

  11  Network  !                                                   !

  12  Activati !  From Date 02.11.01  00:00   to 14.11.01  23:59    !

               !  From Run  1____             to 99999              !

               !                                                    !

 Command => 12 !  PF3  End                                          ! __
Enter-PF1---PF +-----------------------------------------------------+ --PF12---
      Help        End   Old                                             Menu
```

4. Enter date, time and run number ranges.

   The Entire Operations: Activation Overview screen will be displayed.

```
                                                Entire Operations: Activation Ov

-------------------------------------------------------------------------------

Date: 02.11.01

  Owner      Network    Job        Run   Time  Type       Message

  ---------- ---------- ---------- ----- ----- ---------- ---------------------


  UKSJU      WLSJOBS    -             88 00:00 Scheduled  Activation Net 02.11

  UKSJU      AAAA-NET   NAT-SYMBOL    44 15:14 Manual     Job Act. sched. on 02

  UKSJU      AAAA-NET   NAT-SYMBOL    45 15:15 Manual     Job Act. sched. on 02

  UKSJU      AAAA-NET   NAT-SYMBOL    46 15:16 Manual     Job Act. sched. on 02

  UKSJU      AAAA-NET   NAT-SYMBOL    47 15:17 Manual     Job Act. sched. on 02

  UKSJU      AAAA-NET   NAT-SYMBOL    48 15:26 Manual     Job Act. sched. on 02

  UKSJU      AAAA-NET   NAT-SYMBOL    49 15:38 Manual     Job Act. sched. on 02

  UKSJU      AAAA-NET   QQQQQQQQ      50 15:43 Manual     Job Act. sched. on 02

  UKSJU      WLSJOBS    -             89 16:00 Manual     Network Act. sched. o

  UKSJU      WLSJOBS    -             89 16:01 Scheduled  Activation Net 02.11

  UKSJU      TEST-REP1  -             74 16:07 EOJ        Activated by UKSJU/WL

  UKSJU      TEST-REP1  REALJOB1      75 16:07 EOJ        Activated by UKSJU/WL

  UKSJU      TEST-REP1  -             74 16:07 Scheduled  Activation Net 02.11

 ************************************* m o r e ********************************
Enter-PF1---PF2---PF3---PF4---PF5---PF6---PF7---PF8---PF9---PF10--PF11--PF12---
                 End                           Down        Left  Right Menu
```

This screen displays the following columns for each date in the selected range.

# Column Headings

 Copyright © Software AG 2003

| Column | Explanation |
|---|---|
| Owner | Owner name. |
| Network | Network name. |
| Job | Job name for a single job activation or for a network activation. |
| Run | Run number. |
| Time | Time job or network was activated. |
| Type | Type of activation:<br>Scheduled - activated because of schedule.<br>Manual - activated manually.<br>EOJ - activated by an EOJ action.<br>API - activated via NOPUAC4N.<br>Recovery - activated by EOJ recovery processing. |
| Message | Log message associated with activation. |

# Special PF Keys

| Key | Name | Function |
|---|---|---|
| PF3 | End | Returns to Activation Type selection. |
| PF8 | Down | Scrolls down. |
| PF10 | Left | Scrolls left. |
| PF11 | Right | Scrolls right. |
| PF12 | Menu | Returns to the Entire Operations main menu. |

# Left and Right Scrolling

You can scroll right (twice) by pressing PF11:

1. First scroll right:

```
                           Entire Operations: Activation Overview

--------------------------------------------------------------------------------



    Job        Run   Time  Type       Message

--- ---------- ----- ----- ---------- ----------------------------------------



    -             88 00:00 Scheduled  Activation Net 02.11 09:30

T   NAT-SYMBOL    44 15:14 Manual     Job Act. sched. on 02.11.01 at 15:14 Run

T   NAT-SYMBOL    45 15:15 Manual     Job Act. sched. on 02.11.01 at 15:15 Run

T   NAT-SYMBOL    46 15:16 Manual     Job Act. sched. on 02.11.01 at 15:16 Run

T   NAT-SYMBOL    47 15:17 Manual     Job Act. sched. on 02.11.01 at 15:17 Run

T   NAT-SYMBOL    48 15:26 Manual     Job Act. sched. on 02.11.01 at 15:26 Run

T   NAT-SYMBOL    49 15:38 Manual     Job Act. sched. on 02.11.01 at 15:38 Run

T   QQQQQQQQ      50 15:43 Manual     Job Act. sched. on 02.11.01 at 15:43 Run

    -             89 16:00 Manual     Network Act. sched. on 02.11.01 at 16:00

    -             89 16:01 Scheduled  Activation Net 02.11 16:00

P1  -             74 16:07 EOJ        Activated by UKSJU/WLSJOBS/WLS-JOB01 Run

P1  REALJOB1      75 16:07 EOJ        Activated by UKSJU/WLSJOBS/WLS-JOB02 Run

P1  -             74 16:07 Scheduled  Activation Net 02.11 16:07

***************** m o r e ************************************
Enter-PF1---PF2---PF3---PF4---PF5---PF6---PF7---PF8---PF9---PF10--PF11--PF12---
                  End                           Down        Left  Right Menu
```

2. Second scroll right:

 Copyright © Software AG 2003

```
       Entire Operations: Activation Overview

-------------------------------------------------------------------------------



 Time  Type       Message

 ----- ---------- ------------------------------------------------------------



 00:00 Scheduled  Activation Net 02.11 09:30

 15:14 Manual     Job Act. sched. on 02.11.01 at 15:14 Run 44

 15:15 Manual     Job Act. sched. on 02.11.01 at 15:15 Run 45

 15:16 Manual     Job Act. sched. on 02.11.01 at 15:16 Run 46

 15:17 Manual     Job Act. sched. on 02.11.01 at 15:17 Run 47

 15:26 Manual     Job Act. sched. on 02.11.01 at 15:26 Run 48

 15:38 Manual     Job Act. sched. on 02.11.01 at 15:38 Run 49

 15:43 Manual     Job Act. sched. on 02.11.01 at 15:43 Run 50

 16:00 Manual     Network Act. sched. on 02.11.01 at 16:00 Run 89

 16:01 Scheduled  Activation Net 02.11 16:00

 16:07 EOJ        Activated by UKSJU/WLSJOBS/WLS-JOB01 Run 89

 16:07 EOJ        Activated by UKSJU/WLSJOBS/WLS-JOB02 Run 89

 16:07 Scheduled  Activation Net 02.11 16:07

o r e ***********************************
Enter-PF1---PF2---PF3---PF4---PF5---PF6---PF7---PF8---PF9---PF10--PF11--PF12---
                  End                           Down        Left  Right Menu
```

3. Use PF10 to scroll left.

# Producing Reports in Batch

All of the above reports can also be run in batch. As noted above, no security or wildcard restrictions apply in batch.

Batch reports are printed on Natural printer 1, which must be allocated correctly in the job control. The Natural batch session must have the necessary LFILEs (131 and 216) correctly set and should run in delimiter input mode (IM=D). The examples below assume that input delimiter is set to ,.

The batch reporting programs input their parameters in several steps. This is described separately for each program.

This subsection covers the following topics:

- Log Reports
- Accounting Data
- Network Information
- Network Job Flow
- Schedule of Jobs
- Network Start Summary
- Network Schedule Overview
- Activation Overview
- Extended Log Report
- Report of Used JCL

---

## Log Reports

Log reports (equivalent to online options 1, 2 and 3) are produced by program RE-LOG-P. It does 3 INPUTs:

1. Options
   - Report type
     **A** all events in log
     **B** abended jobs
     **T** terminated jobs
     **X** not started jobs
   - Count Jobs
     **Y** produce a count of jobs (Warning: this requires a rereading of the whole log and therefore will greatly increase the elapsed and cpu times and the number of Adabas calls for the batch job)
     **N** do not produce a count of jobs
2. Owner/Network/Job
   - Owner name. *, > and < wildcards are allowed. Use * for all owners.
   - Network name. *, > and < wildcards are allowed. Use * for all networks.
   - Job name. *, > and < wildcards are allowed. Use * for all jobs.
3. Date, time, run number ranges
   - From date (format YYYYMMDD)
   - From time (format HH:II:SS)
   - From run (maximum 999999999)
   - To date (format YYYYMMDD)
   - To time (format HH:II:SS)
   - To run (maximum 999999999)

 Copyright © Software AG 2003

## Examples

Below are examples of Natural CMSYNIN data for producing various log reports:

```
RE-LOG-P T,Y

EX*,E10>

20011101,,,20011130,23:59:59,999999999
```

will produce a report of all terminated jobs in networks with names greater than E10 under owners beginning EX, starting at 00:00:00 on 1st November 2001 and ending at 23:59:59 on 30th November 2001, for run numbers in the range 0 to 999999999. A count of jobs will be produced.

```
RE-LOG-P A,N

*,*,*

20011114,09:00:00,51,20011114,17:30:00,60
```

will produce a report of all events between 09:00:00 and 17:30:00 on 14th November 2001 for all owners, networks and jobs with run numbers between 51 and 60. A count of jobs will not be produced.

# Accounting Data

Accounting data (equivalent to online option 4) is produced by program RE-ACC-P. It does 2 INPUTs:

1. Owner/Network/Job
   - Owner name. *, > and < wildcards are allowed. Use * for all owners.
   - Network name. *, > and < wildcards are allowed. Use * for all networks.
   - Job name. *, > and < wildcards are allowed. Use * for all jobs.
2. Date, time, run number ranges
   - From date (format YYYYMMDD)
   - From time (format HH:II:SS)
   - From run (maximum 999999999)
   - To date (format YYYYMMDD)
   - To time (format HH:II:SS)
   - To run (maximum 999999999)

## Examples

Below are examples of Natural CMSYNIN data for producing various accounting reports:

```
RE-ACC-P

EXAMPLE,E01-CONTI

20011101,,,20011130,23:59:59,999999999
```

will produce accounting data for all jobs in network E01-CONTI under owner EXAMPLE, starting at 00:00:00 on 1st November 2001 and ending at 23:59:59 on 30th November 2001, for run numbers in the range 0 to 999999999.

```
RE-ACC-P

EXAMPLE,*,E10*

20011101,09:00:00,51,20011231,23:59:59,60
```

will produce accounting data for for all jobs beginning E10 in all networks under owner EXAMPLE, starting it 09:00:00 on 1st November 2001 ending at 23:59:59 on 31st December 2001, with run numbers between 51 and 60.

# Network Information

Network reports (equivalent to online options 5, 6 and 7) are produced by program RE-NET-P. It does 2 INPUTs:

1. Report type
   - **S** summary
   - **D** detailed
   - **J** detailed, with JCL
2. Owner/Network
   - Owner name. *,> and < wildcards are allowed. Use * for all owners.
   - Network name. *,> and < wildcards are allowed. Use * for all networks.

## Examples

Below are examples of Natural CMSYNIN data for producing various network reports:

```
RE-NET-P S

*,*
```

will produce a summary report for all networks.

```
RE-NET-P J

SYS*,W>
```

will produce a detailed report, including JCL for all networks with names greater than W in owners beginning SYS.

# Network Job Flow

Network job flow (equivalent to online option 8) is produced by program RE-FLW-P. It does 1 INPUT:

1. Owner/Network
   - Owner name. *,> and < wildcards are allowed. Use * for all owners.
   - Network name. *,> and < wildcards are allowed. Use * for all networks.

## Examples

Below are examples of Natural CMSYNIN data for producing various network job flow reports:

```
RE-FLW-P

EXAMPLE,E60-FLOW
```

 Copyright © Software AG 2003

will produce a report for E60-FLOW in owner EXAMPLE.

```
RE-FLW-P
```

```
SYS*,W>
```

will produce a report for all networks with names greater than W in owners beginning SYS.

# Schedule of Jobs

Job schedules (equivalent to online option 9) are produced by program RE-JSC-P. It does 2 INPUTs:

1. Owner/Network
   - Owner name. *,> and < wildcards are allowed. Use * for all owners.
   - Network name. *,> and < wildcards are allowed. Use * for all networks.
2. Date range
   - From date (format YYYYMMDD)
   - To date (format YYYYMMDD)

## Examples

Below are examples of Natural CMSYNIN data for producing various job schedule reports:

```
RE-JSC-P
EXAMPLE,E01-CONTI
20011101,20011130
```

will produce a schedule of jobs in network E01-CONTI under owner EXAMPLE, between 1st and 30th November 2001.

```
RE-JSC-P
*,*
20011101,20011231
```

will produce a schedule of all jobs, between 1st and 30th November 2001.

# Network Start Summary

The network start summary (equivalent to online option 10) is produced by program RE-ACT-P. It does 2 INPUTs:

1. Owner/Network
   - Owner name. *,> and < wildcards are allowed. Use * for all owners.
   - Network name. *,> and < wildcards are allowed. Use * for all networks.
2. Date range
   - From date (format YYYYMMDD)
   - To date (format YYYYMMDD)

## Examples

Below are examples of Natural CMSYNIN data for producing various network start summary reports:

```
RE-ACT-P
EXAMPLE,*
20011101,20011130
```

will produce a summary of all networks under owner EXAMPLE, between 1st and 30th November 2001.

```
RE-ACT-P
E*,M<
20011101,20011231
```

will produce a summary of all networks with names less than M under owners beginning with E between 1st November and 31st December 2001.

# Network Schedule Overview

The network schedule overview (equivalent to online option 11) is produced by program RE-NSC-P. It does 3 INPUTs:

1. Report Type
   - **A** with schedule.
   - **B** to activate, sorted by network.
   - **C** to activate, sorted by time.
2. Owner/Network
   - Owner name. *,> and < wildcards are allowed. Use * for all owners.
   - Network name. *,> and < wildcards are allowed. Use * for all networks.
3. Date range
   - From date (format YYYYMMDD).
   - To date (format YYYYMMDD).

## Examples

Below are examples of Natural CMSYNIN data for producing various schedule overview reports:

```
RE-NSC-P A
EXAMPLE,*
20011101,20011130
```

will produce an overview of all networks under owner EXAMPLE, scheduled to run between 1st and 30th November 2001.

```
RE-NSC-P B
E*,M<
20011101,20011231
```

will produce an overview of schedule extractions (activations) of all networks with names less than M under owners beginning with E between 1st November and 31st December 2001.

# Activation Overview

The activation overview (equivalent to online option 12) is produced by program RE-ACO-P. It does 3 INPUTs:

1. Activation Types to be included in report
   - ***** all network activations
   - **A** networks activated via NOPUAC4N API
   - **M** networks activated manually
   - **O** networks activated as a result of EOJ checking
   - **R** networks activated as part of recovery processing for an abended job
   - **S** networks activated according to schedule
     You can either specify * or any combination of **A**, **M**, **O**, **R**, **S**

 Copyright © Software AG 2003

2. Owner/Network
   - Owner name. *,> and < wildcards are allowed. Use * for all owners.
   - Network name. *,> and < wildcards are allowed. Use * for all networks.
3. Date, time, run number ranges
   - From date (format YYYYMMDD)
   - From time (format HH:II:SS)
   - From run (maximum 999999999)
   - To date (format YYYYMMDD)
   - To time (format HH:II:SS)
   - To run (maximum 999999999)

## Examples

Below are examples of Natural CMSYNIN data for producing various activation overview reports:

```
RE-ACO-P AM
EXAMPLE,*
20011101,,,20011130 (equivalent to 20011101,00:00:00,1,20011130,23:59:59,999999999)
```

will produce an overview of all networks under owner EXAMPLE, activated manually or by API between 1st and 30th November 2001.

```
RE-ACO-P *
*,*
20011115,14:00:00,71,20011115,22:00:00,99
```

will produce an overview of all activations between 14:00:00 and 22:00:00 on 15th November 2001, with run numbers between 71 and 99.

# Extended Log Report

This report is only available in batch and can be used to print the following:

- log records
- job output written to the log
- active JCL changes written to the log
- active JCL

The report program is NOPLP01P and it does one input to receive these parameters:

| Parameter | Explanation | | |
|---|---|---|---|
| FROM-DATE-TIME | Format YYYYMMDDHHIISS, starting time for log report. | | |
| THRU-DATE-TIME | Format YYYYMMDDHHIISS, ending time for log report. | | |
| LANG | Language in which log records will be printed, either 1 for English (the default) or 2 for German. | | |
| OWNER | Owner(s) to be included in the report. The wildards *, > and < are allowed. | | |
| NETWORK | Network(s) to be included in the report. The wildcards *, > and < are allowed. | | |
| DBENV | Reserved for future use. Do not specify this parameter. | | |
| RUN-FROM | Starting run number. | | |
| RUN-THRU | Ending run number. | | |
| JOB | Job(s) to be included in the report. The wildcards *, > and < are allowed. | | |
| ACTJCL | **Y or N**.<br>If Y, any active JCL for jobs matching the owner/network/job/run criteria is printed after the log information. | | |
| SYSOUT | **Y or N**.<br>If Y, any logged sysout for jobs matching the owner/network/run/job/date/time criteria is printed. | | |
| CHGJCL | **Y or N**.<br>If Y, any active JCL modifications for jobs matching the owner/network/run/job/date/time criteria are printed. | EXTLOG | **Y or N**.<br>Specify a default value for ACTJCL, SYSOUT and CHGJCL. |

Because of the large number of parameters, you are recommended to use keyword mode for specifying them. NOPLP01P can be executed in a standard batch Natural, with LFILEs 131 and 216 set. The output is written to the Natural system print dataset (CMPRINT).

The following example assumes the Natural parameters IM=D,IA==,CF=%.

```
NOPLP01P

FROM-DATE-TIME=20011101000000%
THRU-DATE-TIME=20011115163000%
RUN-FROM=1%
RUN-THRU=999%
OWNER=UKSJ*%
NETWORK=TEST-2>%
JOB=L<%
LANG=2%
EXTLOG=Y
```

 Copyright © Software AG 2003

This example will print all log records as well as logged sysout, logged active JCL modifications and active JCL for jobs with names less than L in networks with names greater than TEST-2 under owners beginning with UKSJ, with run numbers in the range 1 to 999 between 00:00 on 1st November 2001 and 16:30 on 15th November 2001. The log records will be printed in German.

**Note:**
The date/time range has no influence on printing of active JCL.

# Report of Used JCL

The report of used JCL is produced by the program RJCLOC-P. It does 2 INPUTs:

- **Owner**
  Wildcard may be used.
- **Network**
  Wildcard may be used.

Below are examples of Natural CMSYNIN data for producing JCL usage reports:

- `RJCLOC-P EXAMPLE NET-01`
  List used JCL of network EXAMPLE / NET-01.
- `RJCLOC-P TEST* *`
  List used JCL of all networks of owners with have ‡TESTŸ as begin of their names.

# Cross References

This subsection covers the following topics:

- Displaying Cross References
- Usage of User Routines
- Usage of Symbol Tables
- JCL Usage
- Field Descriptions for JCL Usage
- Cross-Reference Listing in Batch

## Displaying Cross References

**To display cross references**

1. Use the direct command XREF, described in the section Direct Commands of the Entire Operations Reference Documentation.

   The following screen appears.

```
15.11.01                *** Entire Operations 4.1.1 ***                17:03:15
Owner UKSJU                  Cross References Menu             User ID UKSJU
-------------------------------------------------------------------------------

     Cross References Menu

  1  User Routine Usage
  2  Symbol Table Usage
  3  JCL Usage

 Command => ____________________________________________________________
Enter-PF1---PF2---PF3---PF4---PF5---PF6---PF7---PF8---PF9---PF10--PF11--PF12---
      Help        End                                                   Menu
```

 Copyright © Software AG 2003

2. Choose the type of cross reference from the Cross Reference Menu.

# Usage of User Routines

**To use user routines**

1. Enter the number for User Routine Usage and press Enter.

   The following screen will be displayed:

```
 20.11.01               *** Entire Operations 4.1.1 ***              11:20:55
                             Usage of User Routines
 ------------------------------------------------------------------------------
 Please mark one or several Types.

 Cmd  Type

 _    Input Condition User Routines
 _    Resource Master Determination Exits
 _    Master JCL and Natural Programs
 _    End-of-Job Check User Routines
 _    End-of-Job Action User Routines
 _    Symbol Check User Routines
 _    Symbol Prompt User Routines





 Command => ____________________________________________________________
Enter-PF1---PF2---PF3---PF4---PF5---PF6---PF7---PF8---PF9---PF10--PF11--PF12---
                  End
```

2. Mark one of the fields to select the cross reference you want to display.

# Usage of Symbol Tables

**To use symbol tables**

1. Enter the number for Symbol Table Usage and press Enter.

   The following selection window will open:

```
02.01.02              *** Entire Operations 4.1.1 ***              15:17:18



          Symbol Table Usage


Owner        ==> __________   (Blank for all, * for selection
Symbol Table ==> __________   or * and PF4 to process all
                              matching objects)
Usage in active jobs  ==> N   (Y/N)

Destination           ==> 1
   1 - Screen  2 - Printer  3 - PC  4 - PC-CSV

Enter------PF3------PF4-------------------------------------------------------
           End     Apply
```

2. After you have completed the selection, use PF4 to create the report.

   The report output on screen looks similar to this:

```
02.01.02    Entire Operations    15:20:34
             Symbol Table Usage  Page   11




   Owner         DQA

   Symbol Table  QAOVERVIEW

Owner      Network    Run     Job
---------- ---------- ------- ----------
DQA        DQATESTBED
DQA        DQATESTBED         SUB-01-ACT
DQA        DQATESTBED         SUB-02-ACT
DQA        DQATESTBED         SUB-10-ACT
DQA        QAN01MVS-X
DQA        QAN01MVS-X         QAN01J98EV
```

# JCL Usage

You can use option 3 JCL Usage to find out which JCL files are used in which networks.

**To invoke JCL Usage**

1. Enter the number for JCL Usage on the command line and press Enter.

   The following screen will appear:

 Copyright © Software AG 2003

```
 15.11.01               *** Entire Operations 4.1.1 ***               17:03:15
 Owne +-------------------------------------------------------------+ JU
 ---- !                                                              ! -----
      !                            JCL Usage                         !
      !                                                              !
      !  Enter selection criteria (with * Wildcard) or blank for all !
   1  !                                                              !
   2  !  File/Natlib    : ______________________________________    !
   3  !  Member         : ________                                  !
      !  JCL Location   : ___                                       !
      !                                                              !
      !                                                              !
      !  Enter------PF3-----------------------------------------    !
      !             End                                              !
      +--------------------------------------------------------------+


 Command => 3_____________________________________________________________
Enter-PF1---PF2---PF3---PF4---PF5---PF6---PF7---PF8---PF9---PF10--PF11--PF12---
      Help        End                                                 Menu
```

# Field Descriptions for JCL Usage

| Field | Explanation |
|---|---|
| File/Natlib | You can restrict the cross reference to an individual file or Natural library (or a set of files with the same prefix) by using an * wildcard. |
| Member | You can restrict the cross reference to an individual member (or a set of members with the same prefix) by using an * wildcard. |
| JCL Location | You can restrict the cross reference to any one of the supported JCL locations, or leave blank to include any location. |

2. Make your selection and press Enter to move on to the next screen:

```
 15.11.01               *** Entire Operations 4.1.1 ***              17:23:04
 Owne +------- +-------------------------------------------------------------+
 ---- !        !                                                             !
      !        !  JCL Usage                                                  !
      !        !                                                             !
      !  Enter !  Owner......: __________    (Blank for all, * for selection  !
   1  !        !  Network....: __________     or * and PF4 to process all     !
   2  !  File/ !                              matching objects)               !
   3  !  Membe !                                                             !
      !  JCL L !                                                             !
      !        !  Destination: 1                                             !
      !        !     1 - Screen  2 - Printer  3 - PC  4 - PC-CSV             !
      !  Enter !                                                             !
      !        ! Enter-PF1---PF2---PF3---PF4---PF5---PF6---PF7---PF8---PF9--- !
      +------- !       Help        End   Apply Accpt                         !
               +-------------------------------------------------------------+









 Command => 3_____________________________________________________________
Enter-PF1---PF2---PF3---PF4---PF5---PF6---PF7---PF8---PF9---PF10--PF11--PF12---
      Help        End                                                     Menu
```

Here you can restrict the cross-reference to particular owners and networks, using the *, < and > wildcard characters. You can also choose any of the 4 destinations. Fields and PF keys are the same as for the reporting system, described above.

# Cross-Reference Listing in Batch

**To produce the cross-reference listing in batch**

- Run XRJCL--P in a standard batch Natural job with LFILEs 131 and 216 assigned and printer file 1 correctly defined.

  The program does 2 inputs:

  1. File/Natlib, Member, JCL Location
  2. Owner, Network

  The following examples assume the Natural parameters IM=D,ID=,:

  ```
  XRJCL--P
  PROD1.JOBLIB,IEB*
  SYS*,W
  ```

  This will produce a list of all jobs in networks with names less than W under owners beginning with SYS that use JCL members beginning with IEB in dataset PROD1.JOBLIB.

  ```
  XRJCLP
  SYS*,*,NAT
  *,*
  ```

 Copyright © Software AG 2003

This will produce a list of all jobs which use JCL in Natural libraries beginning with SYS.

# API Routines

This section covers the following topics:

- Application Programming Interface
- List of Available API Routines
- Using the API Routines
- Invoking the API Routines
- Example of Use of API-Routines

 Copyright © Software AG 2003

# Application Programming Interface

The Entire Operations library contains an Application Programming Interface (API). This is a set of routines that you can invoke from any other Natural application in order to access Entire Operations' internal data.

You can invoke these routines simply by using a Natural CALLNAT statement. The CALLNAT statement is described in detail in the **Natural Reference Documentation**.

In an appropriate location after the CALLNAT statement, you must code an END TRANSACTION statement to close Entire Operations' transaction logic. No END TRANSACTION statement is issued from within Entire Operations' APIs.

You can change the parameter names, but not the parameter format, number and order.

# List of Available Entire Operations API Routines

| Function | Description |
|---|---|
| NOPUST2N | Network and job status inquiry, symbol table inquiry |
| NOPUAS1N | Retrieve numbers of active jobs in defined status ranges. |
| NOPUCS1N | Access to calendars and schedules |
| NOPUCN3N | Access to conditions |
| NOPURS1N | Access to master resources |
| NOPURE1N | Handling of Resource Allocations |
| NOPUSY4N | Access to symbols |
| NOPUAC4N | Activation of job networks or jobs |
| NOPULW8N | Writing messages to the SAT log |
| NOPUMT2N | Expanding message texts |
| NOPUJI4N | Import of operating system jobs into the Entire Operations active queue |
| NOPUSP1N | Display of long texts for symbol prompting |
| NOPFB2-N | Generation of sysout file names for BS2000/OSD |
| EORUCB1N | Checking use of BS2000/OSD user IDs |
| NOPUJS1N | Inquiring and modifying job schedules |
| NOPUSN1N | Sub-networks: inquiring calling job or network that is called |
| NOPMLA1N | Start and stop monitor activity log |
| NOPUVI2N | Entire Operations version information |

 Copyright © Software AG 2003

# Using the API Routines

The Entire Operations API routines are delivered as Natural subprograms within the Entire Operations library.

The naming convention is:

| |
|---|
| NOPUxxxy |

where NOPU means Entire Operations User API Routine, *xxx* is the program name (sometimes containing a version number) and *y* is the program type (**N** - subprogram, **P** - program).

To use the Entire Operations API routines, define your SYSEOR library as Steplib.

They can be copied to the user application, or to a Natural SYSTEM library to make them available to all Entire Operations users. They can be made available by assigning their current library as Natural STEPLIB.

If you do not want to define SYSEOR as STEPLIB, then you must copy the following modules as well: NOPRNI-N, NOPXGM1N, NOP0320N, NOPRNT-N, NOPNMC-N, NOPXDM-N, NOPRNL-N.

**Note:**
You cannot change any routine names, since there are dependencies between them. The routines delivered with the previous Entire Operations version are still supported. Convert their calls to the newer version when you modify the calling programs. For example, beginning with Entire Operations version 1.4.1, use the network activation subprogram NOPUAC4N instead of the previously valid program NOPUAC3N. Change all CALLNAT NOPUAC3N calls to CALLNAT NOPUAC4N. The complete range of functions is available only with the latest version.

# Invoking the API Routines

First, the user application must establish a link to the Entire Operations system files. This can be done in any of the following ways:

If the user application startup is extended with either

```
NTFILE ID=216,DBID=<eor-sysf1-dbid>,FNR=<eor-sysf1-fnr>
NTFILE ID=131,DBID=<sat-log-dbid>,FNR=<sat-log-fnr> (in parameter module)
```

or

```
LFILE (216,<eor-sysf1-dbid>,<eor-sysf1-fnr>)
LFILE (131,<sat-log-dbid>,<sat-log-fnr>)     (as dynamic parameter)
```

the link is already established.

 Copyright © Software AG 2003

# Inquire Network and Job Status, Symbol Table

This subsection covers the following topics:

- Inquire the Current Status of an Active Job Network
- Inquire Status of Whole Active Network
- Inquire Status of all Jobs of an Active Network Individually
- Inquire Symbol Table Used

## Inquire the Current Status of an Active Job Network

You can inquire the current status of an active job network or of a single active job by using the following statement in your Natural application:

```
CALLNAT 'NOPUST2N'
    P-FUNCTION P-RC P-OWNER P-NETWORK P-JOB P-RUN
     P-SYMBOL-TABLE P-JOB-ID-10 P-STATUS-TIME
```

Meaning of the parameters:

| Parameter | Format | Usage | | |
|---|---|---|---|---|
| P-FUNCTION | A01 | in | Function code: | |
| | | | **A** | Get next active run number (in numerical order) beginning with a starting run number. |
| | | | **R** | Get last run number (in chronological order). |
| | | | **S** | Inquire status. |
| | | | **N** | Inquire status of next job (alphabetically). |
| | | | **W** | Status of next job waiting for anything, or of next job in status ‡permanent errorŸ. |
| | | | **Y** | Get name of symbol table from master network or job definition. |
| P-RC | N03 | out | Return code: | |
| | | | **0** | Function ok. |
| | | | **1** | Network or job not found, or run number does not exist. |
| | | | **20** | Waiting for symbol prompting, etc. |
| | | | **21** | Waiting for activation. |
| | | | **25** | Waiting for prerequisite. |
| | | | **26** | Job is in HOLD. |
| | | | **27** | Waiting for next action, or waiting for start time. |
| | | | **28** | Waiting for condition. |
| | | | **29** | Waiting for resource. |

| | | | | |
|---|---|---|---|---|
| | | | **30** | Waiting for operating system server (node). |
| | | | **31** | JCL to be loaded. |
| | | | **32** | Network activation error. |
| | | | **33** | Job activation error. |
| | | | **34** | Symbol replacement error. |
| | | | **35** | Any schedule extraction or activation error. |
| | | | **36** | Job submission. |
| | | | **37** | Job submission error. |
| | | | **38** | Job execution. |
| | | | **39** | Job execution error. |
| | | | **41** | Any job currently executing. |
| | | | **42** | End-of-job checking. |
| | | | **43** | End-of-job checking error. |
| | | | **44** | End-of-job actions. |
| | | | **45** | End-of-job actions error. |
| | | | **65** | (All jobs) terminated ok. |
| | | | **66** | (At least one job) terminated not ok. |
| | | | **69** | (At least one) permanent error. |
| | | | **93** | Waiting for deactivation. |
| | | | **101** | Invalid function code. |
| | | | **102** | Parameters missing. |
| | | | **999** | Status not defined. |
| P-OWNER | A10 | in | Owner of network. | |
| P-NETWORK | A10 | in | Job network | |
| P-JOB | A10 | in | Job. If left blank, inquiry is for whole network. | |
| P-RUN | P13 | in<br><br>out | Function **A**: Starting run number (can be 0).<br>Function **S**: Run number to be checked.<br><br>Function **A**: Next active run number (in numerical order).<br>Function **R**: Last run number of the network in chronological order. | |
| P-SYMBOL-TABLE | A10 | out | Name of the defined symbol table. Function **Y**, network: standard symbol table. When status inquiry is for whole network, first symbol table found is returned. | |
| P-JOB-ID-10 | A10 | out | ID of the job (for single jobs only, and only if the job was already submitted). | |
| P-STATUS-TIME | A14 | out | Timestamp when the current status of the job was set.<br>Format: YYYYMMDDHHIISS. | |

 Copyright © Software AG 2003

# Inquire Status of Whole Active Network

Use function **S**. Leave the P-JOB parameter blank.

# Inquire Status of all Jobs of an Active Network Individually

Use function **N**. Delete the P-JOB parameter. Then invoke this API in a REPEAT-loop until you get RC = 1 (network end).

Each call returns the status of a job. The name is contained in P-JOB. Do not change the content of P-JOB, because it is used as starting value for the next call.

# Inquire Symbol Table Used

The symbol table used is always returned for active networks and jobs.

For master networks and jobs, you can use the function **Y**.

**Notes:**

1. The status inquiry functions independently of Monitor activity, because it uses data base entries.
2. For a whole network inquiry (with function **S**), the stati of the individual jobs are linked with logical AND. In the worst case, if at least one job has failed, the status **failed** is returned for the whole network.
3. An active network is considered to have **terminated ok** only if all its active jobs have terminated ok.
4. The status inquiry is only possible as long as the network or job involved has not been deactivated.
5. To obtain all active run numbers of a network, proceed as follows:
   - use function **A**
   - begin with starting run number 0
   - call the API
   - terminate when RC does not equal 0
   - keep result as next starting run number and continue with 3.

# Accessing Calendars and Schedules

This subsection covers the following topics:

- Accessing Dates within Calendars or Schedules
- Example for Using NOPUCS1N

## Accessing Dates within Calendars or Schedules

You can access dates within calendars or schedules using the following statement in your Natural application:

```
CALLNAT 'NOPUCS1N'
    P-FUNCTION P-RC P-OBJECT-TYPE P-OWNER P-OBJECT P-DATE-A8
```

Meaning of the parameters:

 Copyright © Software AG 2003

| Parameter | Format | Usage | | |
|---|---|---|---|---|
| P-FUNCTION | A01 | in | Function code: | |
| | | | **C** | Determine the calendar used. |
| | | | **D** | Determine the schedule used. |
| | | | **N** | Determine the next set date, from a starting date. |
| | | | **P** | Determine the previous set date, from a starting date. |
| | | | **R** | Reset a date. Date will be removed from calendar or schedule. |
| | | | **S** | Set a date. Date will be added to calendar or schedule. |
| | | | **T** | Test a date. If date exists within calendar or schedule: **RC** contains 0, otherwise 1. |
| P-RC | N03 | out | Return code: | |
| | | | **0** | Function ok; or: date is set. |
| | | | **1** | Date is not set. |
| | | | **2** | Object not found. |
| | | | **101** | Invalid function code. |
| | | | **102** | Parameter(s) missing. |
| | | | **103** | Invalid parameter combination. |
| | | | **104** | Invalid object type. |
| | | | **105** | Invalid date. |
| | | | **106** | Table of explicit dates full. |
| P-OBJECT-TYPE | A01 | in | **Object type:** | |
| | | | **C** | Calendar |
| | | | **H** | Schedule history |
| | | | **S** | Schedule |
| P-OWNER | A10 | in | Owner of object. | |
| P-OBJECT | A10 | in | Name of object: calendar name, schedule name (=network name). | |
| | | aus | Funktion codes **C** and **D**: name of determined object. | |
| P-DATE-A8 | A08 | in | Date in format: YYYYMMDD | |
| | | aus | Function codes **N** and **P**: the date found. | |

**Notes:**

1. Only function **T** is allowed for object type **H** (schedule history)
2. DATE-D should be used for calls from Natural programs.
   P-DATE-A8 must be empty in this case.
3. Schedule history is usually available for the current year and previous two years.
4. Schedule dates can be set for the current year and the next year.
5. The functions **N** and **P** work for a range of years.
   Limitations:
   - For schedules, only the current and the previous year are available.
   - Calendars must be defined for all years in which a search is to be performed.

# Example for Using NOPUCS1N

The program calculates the first Monday of each month in 2001 and subsequently enters the network REQUEST/BFA001 for the calculated days in the schedule.

```
* BFA001
* DETECT FIRST MONDAY IN MONTHS
*
DEFINE DATA
LOCAL
1 #YYYYMMDD (A8)
1 REDEFINE #YYYYMMDD
 2 #YYYY    (N4)
 2 #MM      (N2)
 2 #DD      (N2)
1 #D1      (D)
1 #WD      (A1)
1 #OWNER   (A10) INIT <'REQUEST'> /* Owner   < ---------------------
1 #OBJECT  (A10) INIT <'BFA001'>  /* Network < ---------------------
1 #RC3     (N3)
END-DEFINE
*
#YYYY := 2001                     /* Year    < ---------------------
F1. FOR #MM = 01 TO 12
 RESET #DD
 R1. REPEAT
  ADD 1 TO #DD
  MOVE EDITED #YYYYMMDD TO #D1 (EM=YYYYMMDD)
  MOVE EDITED #D1 (EM=O) TO #WD
  WRITE #D1 (EM=YYYYMMDD) #WD
  UNTIL #WD = '1'      /* R1.
 END-REPEAT        /* R1.
 WRITE #D1 (EM=YYYYMMDD' 'N(10))
*
* CALL NOP SCHEDULE API TO SET THESE DAYS
*
 CALLNAT 'NOPUCS1N'
  'S' #RC3 'S' #OWNER #OBJECT #YYYYMMDD
 WRITE #YYYYMMDD #RC3
END-FOR      /* F1.
END TRANSACTION
END
```

 Copyright © Software AG 2003

# Accessing Entire Operations Conditions

This subsection covers the following topics:

- Handling Entire Operations Conditions
- Description of the Function Codes

## Handling Entire Operations Conditions

You can handle conditions using the following statement in your Natural application:

```
CALLNAT 'NOPUCN3N'
    P-FUNCTION P-RC P-OWNER P-NETWORK P-CONDITION P-RUN-FROM P-RUN-TO
       P-TIME-FROM P-TIME-TO P-CONFIRM P-JCL-CHECK
```

Meaning of the parameters:

| Parameter | Format | Usage | | | | | | |
|---|---|---|---|---|---|---|---|---|
| P-FUNCTION | A01 | in | Function code: | | | | | |
| | | | **R** | Reset a condition. | | | | |
| | | | **S** | Set a condition. | | | | |
| | | | **T** | Test a condition. | | | | |
| P-RC | N03 | out | Return code: | | | | | |
| | | | **0** | Function ok. | | | | |
| | | | **1** | Condition not found. | | | | |
| | | | **2** | Time or run required for reset. | | | | |
| | | | **101** | Invalid function code. | | | | |
| | | | **102** | Condition name missing. | | | | |
| | | | **103** | Invalid date. | | | | |
| | | | **104** | Network name missing. | | | | |
| P-OWNER | A10 | in | Owner of the job network / condition. | | | | | |
| P-NETWORK | A10 | in | Job network. | | | | | |
| P-CONDITION | A20 | in | Condition name. | | | | | |
| P-RUN-FROM | P13 | | Corresponding run number. | | | | | |
| | | in | Absolute condition: **-1** | | | | | |
| | | out | Function **T** and field empty: Last run number found is returned. | P-RUN-TO | P13 | in | Run number to (end of interval) If zero, only P-RUN-FROM will be handled. | |
| P-TIME-FROM | T | | Starting time of condition. | | | | | |
| | | in | | | | | | |
| | | out | Function **T** and field empty: Time belonging to run number is returned. | | | | | |
| P-TIME-TO | T | in | End time of condition. | | | | | |
| P-CONFIRM | A1 | in | Confirm deletions **Y** yes, **N** no | | | | | |
| P-JCL-CHECK | A1 | in | If this field contains C, the condition is treated like one which is used during a JCL check. | | | | | |

 Copyright © Software AG 2003

# Description of the Function Codes

Meaning of the function codes:

| Code | Description |
|---|---|
| R | Reset a condition. The date or the the run number must be specified.<br>If a **run number** is specified, the date is not considered.<br>If a **date** is specified, the deletion of several conditions with the same date, but different run numbers might occur. |
| S | **Set** a condition. The date and / or run number are optional. |
| T | **Test** a condition.<br>If a **run number** is specified, the time frame is not considered.<br>If **no time frame and no run number** are specified, each condition with the specified name matches.<br>If **no run number** is specified, the last run number for the time frame up to the current time is returned.<br>If **no time frame** was given, the time belonging to this run number is returned in P-TIME-FROM. |

Copyright © Software AG 2003 

# Accessing Entire Operations Master Resources

This subsection covers the following topics:

- Handling Entire Operations Master Resources
- Description of the Function Codes

## Handling Entire Operations Master Resources

You can handle master resources with the following statement:

```
CALLNAT 'NOPURS1N'
    P-FUNCTION P-RC P-NODE P-RESOURCE P-TYPE P-INIT-QTY P-USED-QTY
```

Meaning of the parameters:

 Copyright © Software AG 2003

| Parameter | Format | Usage | | |
|---|---|---|---|---|
| P-FUNCTION | A01 | in | Function code: | |
| | | | **A** | Add a resource. |
| | | | **D** | Delete a resource. |
| | | | **M** | Modify a resource. |
| | | | **T** | Test a resource. |
| P-RC | N03 | out | Return code: | |
| | | | **0** | Function ok; resource found. |
| | | | **1** | Resource not found. |
| | | | **2** | Resource already exists. |
| | | | **3** | Inconsistent values. |
| | | | **4** | Initial quantity may not be modified. |
| | | | **101** | Invalid function code. |
| | | | **102** | Resource name missing. |
| P-NODE | N03 | in | Not used; use constant with value=0. | |
| P-RESOURCE | A20 | in | Name of the resource. | |
| P-TYPE | A01 | in | Type of resource<br>(only for FUNCTION = ‡AŸ) | |
| | | | **N** | Not quantitative. |
| | | | **R** | Quantitative, re-usable. |
| | | | **U** | Quantitative, not re-usable. |
| P-INIT-QTY | P7.2 | in/out | Total quantity. | |
| P-USED-QTY | P7.2 | in/out | Currently used quantity. | |

# Description of the Function Codes

Meaning of the function codes:

| Code | Description |
|---|---|
| A | Adds a new resource definition. You must give values for P-TYPE, P-INIT-QTY and P-QTY. |
| D | Deletes a resource definition. |
| M | Used to modify the values P-INIT-QTY. |
| T | Returns the current values of P-INIT-QTY and P-QTY. |

**Note:**

- Before using **M** for modifications, you should use **T** to read the present values (unless you want to enter an absolute value).
- The currently used amount of a resource can no longer be modified directly. You must perform a resource allocation or deallocation with the API NOPURE1N to modify the currently used resource amount.

# Handling of Resource Allocations

You can handle resource allocations and deallocations with the following statement:

```
CALLNAT 'NOPURE1N'    P-FUNCTION P-RC P-DBENV P-OWNER P-NETWORK P-RUN P-JOB
          P-RESOURCE P-QUANTITY P-DEALLOCATION P-JOB-EXECUTED
```

Meaning of the parameters:

| Parameter | Format | Usage |
|---|---|---|

 Copyright © Software AG 2003

| | | | |
|---|---|---|---|
| P-FUNCTION | A01 | in | Function code: |

| | |
|---|---|
| **A** | Allocate resource. |

 Copyright © Software AG 2003

| | |
|---|---|
| **R** | Release one or several resources.<br><br>● If job and resource name given:<br>release only one allocated resource of one job.<br>● If job given, but no resource:<br>release all allocated resources of one job. |

| | |
|---|---|
| **N** | Network release.<br><br>Release resources with deallocation = "N" as well.<br><br>● If job and resource name given:<br>release only one allocated resource of one job.<br>● If job given, but no resource:<br>release all allocated resources of one job.<br>● If run number, but no job and no resource given:<br>release all allocated resources of one network run.<br>● If no run number and no job and no resource given:<br>release all allocated resources of all network runs. |
| **F** | Forced release.<br><br>Release resources with deallocation = "N" or "K" as well.<br><br>For other parameters, see "R". |
| **T** | Test resource usage, sorted by active jobs.<br><br>Subsequent calls read in the order of active jobs, then resource names.<br><br>**Sequential reading**<br><br>● The sequential reading starts at the first found resource in the order of active jobs, then resource names.<br>● Fields returned by the previous call must be kept and passed for the next call.<br>● P-RC = 5 (resource usage entry not found) is returned, if there are no more entries for this resource. |
| **U** | Test resource usage, sorted by resources, then by active jobs.<br><br>**Sequential reading**<br><br>● The sequential reading starts at the first found resource, in alphabetical order, where the name of the first found resource is equal or subsequent to the name passed in P-RESOURCE.<br>● Fields returned by the previous call must be kept and passed for the next call.<br>● P-RC = 5 (resource usage entry not found) is returned at the end of all resource usage entries. |
| **V** | Test resource usage, sorted by active jobs.<br><br>Subsequent calls read in the order of resource names, then active jobs.<br><br>**Sequential reading**<br><br>● The sequential reading starts at the first found resource followed by the superdescriptor of the active job (identified by P-OWNER, P-NETWORK, P-RUN, P-JOB).<br>● Fields returned by the previous call must be kept and passed for the next call.<br>● P-RC = 5 (resource usage entry not found) is returned at the end of all resource usage entries. |

 Copyright © Software AG 2003

| | | | | |
|---|---|---|---|---|
| P-RC | N03 | out | Return code: | |
| | | | **0** | Function ok. |
| | | | **1** | Active job not found. |
| | | | **2** | Resource not defined for job. |
| | | | **3** | Resource (master) definition not found. |
| | | | **4** | Quantity is not available. |
| | | | **5** | Ok, but no resource usage entries were found.<br>This code may be returned:<br>● if the resource has already been freed<br>● if the resource was never allocated. |
| | | | **101** | Invalid function code. |
| | | | **102** | Parameter(s) missing. |
| | | | **103** | Wildcard not allowed. |
| | | | **104** | DEALLOCATION has wrong value. |
| P-DBENV | A10 | in | (For future use, currently ignored.) | |
| P-OWNER | A10 | in | Owner.<br>Wildcard allowed.<br>Function "A": obligatory, no wildcard allowed. | |
| P-NETWORK | A10 | in | Network.<br>Wildcard allowed.<br>Function "A": obligatory, no wildcard allowed. | |
| P-RUN | I4 | in | Run.<br>**Zero** means all runs of a network.<br>Function "A": obligatory, no wildcard allowed. | |
| P-JOB | A10 | in | Job.<br>If **empty**, the whole network is meant.<br>Wildcard allowed.<br>Function "A": obligatory, no wildcard allowed.<br>**Note:**<br>If this API is used to free a resource and if the allocation was made by another job, this field must remain **empty**. | |
| P-RESOURCE | A20 | in | Name of the resource.<br>If empty, all prerequisite resource definitions of a job are meant.<br>Function "A": obligatory, no wildcard allowed. | |
| P-QUANTITY | N7.2 | in | Quantity to be allocated.<br>Function "A"only. | |

| | | | | |
|---|---|---|---|---|
| P-DEALLOCATION | A1 | in | How to deallocate this allocation (for function "A" only). | |
| | | | **J** | after job termination |
| | | | **N** | after network termination |
| | | | **K** | keep until explicit release |
| | | | For a detailed description of deallocation modes, please see Periods of Resource Allocation in the section Resources. | |
| P-JOB-EXECUTED | L | in | Unreusable resources are decreased only if the job was really executed. | |

 Copyright © Software AG 2003

# Accessing Entire Operations Symbols

This subsection covers the following topics:

- Handling Entire Operations Symbols
- Description of the Function Codes
- Sequential Reading in a Symbol Table
- Example of Sequential Symbol Table Reading

## Handling Entire Operations Symbols

You can handle symbols in symbol tables using the following statement:

```
CALLNAT 'NOPUSY4N'
    FUNCTION RC OWNER NETWORK RUN SYMBOL-TABLE SYMBOL-NAME FORMAT
    VALUE USER TIME
```

Meaning of the parameters:

| Parameter | Format | Usage | | |
|---|---|---|---|---|
| FUNCTION | A01 | in | Function code: | |
| | | | **D** | Delete one multiple value. |
| | | | **M** | Add one multiple value. |
| | | | **N** | Test next symbol. |
| | | | **P** | Test next symbol to be prompted. |
| | | | **R** | Reset a symbol. |
| | | | **S** | Set (add or modify) a symbol. |
| | | | **T** | Test existence of a symbol and inquire its value. |

| | | | | |
|---|---|---|---|---|
| RC | N03 | out | **Return code:** | |
| | | | **0** | Function ok; symbol found. |
| | | | **1** | Symbol not found. |
| | | | **2** | Invalid numeric value. |
| | | | **3** | Invalid format. |
| | | | **4** | Format modification attempted. |
| | | | **5** | Multiple table full. |
| | | | **6** | Value missing. |
| | | | **7** | Value not found. |
| | | | **10** | Invalid value by user exit. |
| | | | **11** | User exit not found. |
| | | | **12** | Access to user exit not allowed (Natural Security). |
| | | | **20** | OK; is a multiple value. |
| | | | **30** | OK; the master symbol was also modified. |
| | | | **101** | Invalid function code. |
| | | | **102** | Parameter missing. |
| | | | **111** | Symbol table name starts with reserved prefix =EOR=. |
| OWNER | A10 | in | Owner of the symbol table. | |
| NETWORK | A10 | in | Network (for active symbol table only). | |
| RUN | P13 | in | Run (for active symbol table only). | |
| SYMBOL-TABLE | A10 | in | The symbol table. | |
| SYMBOL-NAME | A20 | in | The symbol name. | |
| | | out | (for function codes **N** and **P**) | |
| FORMAT | A01 | in | Symbol format. | |
| | | out | (for function codes **N**, **P** and **T**) | |
| | | | **" " or A** | Alphanumeric. No case conversion. |
| | | | **D** | Date in the format: YYYYMMDD |
| | | | **L** | Alphanumeric. Conversion to lower case. |
| | | | **N** | Numeric. |
| | | | **U** | Alphanumeric. Conversion to upper case. |
| VALUE | A80 | in | Symbol value. | |
| | | out | (for function codes **N**, **P** and **T**) | |
| USER | A08 | out | User who made the last modification. | |
| TIME | T | out | Time of the last modification. | |

 Copyright © Software AG 2003

# Description of the Function Codes

Meaning of the function codes:

| Code | Description |
|---|---|
| D | **Delete** one multiple value. Resets one value in a multiple-value symbol. If this is the last symbol value, the whole symbol is removed from the table. |
| M | **Add** one **multiple** value. Sets one more value in a multiple-value symbol.<br>**Note:**<br>Even if the quantity of the multiple values is 1, the single value remains a multiple value. It will not be converted into a standard value. |
| N | **Test** next symbol. Tries to find the next symbol (in alphabetic order) from the specified symbol. The given name is overwritten by the name found. The other fields are returned as in function **T**. To find the first symbol of a symbol table, the symbol name can be omitted. If the end of the symbol table is reached, code **1** is returned. |
| P | **Test** next symbol to be prompted. Finds the next symbol in alphabetical order to be prompted for the current network/job run. Otherwise works like function code **N**. |
| R | **Reset** a symbol. The symbol is removed from the symbol table. |
| S | **Set** a symbol. If the symbol does not exist in the symbol table, it is inserted; if it already exists, it is overwritten. |
| T | **Test** a symbol. If the symbol is not found, code **1** is returned. If the symbol exists, its format and value are returned. The fields User and Time contain the user and time stamp of the last modification. |

**Notes:**

1. To access a **master** symbol table, the fields NETWORK and RUN must be empty. To access an **active** symbol table, the fields NETWORK and RUN must be supplied by the caller.
2. If a plausibility check user exit is defined for the symbol, it is invoked from this API routine, too. Make sure that the user exit is accessible in the calling environment. The library containing the user exit must be defined as STEPLIB for the executing environment of these APIs. A symbol value is **rejected** if the exit returns **not ok** (RC=10) or if the exit is missing (RC=11).
3. All actions will be logged.

# Sequential Reading in a Symbol Table

**To read symbols sequentially from a master or active symbol table, proceed as follows:**

1. Set function to **N**.
2. If you want to start reading at the start of the table, reset SYMBOL-NAME first; otherwise put a start name into SYMBOL-NAME.
3. Call the user routine in a REPEAT loop; leave it, if RC is not **0** and not **20**.
4. Leave SYMBOL-NAME unchanged as start value for the next call.
5. Reset SYMBOL-VALUE before the next call, if RC=0.
6. Do not reset SYMBOL-VALUE, if RC=20.

# Example of Sequential Symbol Table Reading

```
MOVE 'N' TO FUNCTION
RESET SYMBOL-NAME
R1.  REPEAT
     CALLNAT 'NOPUSY4N' RC  ...

     DECIDE ON FIRST VALUE OF RC
     VALUE 0, 20 IGNORE
     VALUE 1 ESCAPE BOTTOM (R1.)
     NONE VALUE
            /* Error handling
     END-DECIDE
            /* process symbol here
     IF RC NE 20
          RESET VALUE
     END-IF
END-REPEAT
```

 Copyright © Software AG 2003

# Activation of Job Networks or Jobs

This subsection covers the following topics:

- Trigger Activation of Job Networks or Jobs
- Activation with Symbol Modification

## Trigger Activation of Job Networks or Jobs

You can activate job networks or jobs from your Natural application.
The network of job definitions must exist in Entire Operations. Use:

```
CALLNAT 'NOPUAC4N'
    FUNCTION RC OWNER NETWORK JOB SYMBOL-TABLE START TIME RUN
```

Meaning of the parameters:

| Parameter | Format | Usage | | |
|---|---|---|---|---|
| FUNCTION | A01 | in | Function code: | |
| | | | **A** | Activate, no hold for symbols. |
| | | | **1** | Like **A**, but time frame as defined in schedule is used. |
| | | | **C** | Change start time. |
| | | | **D** | RUN > **0**: Deactivate network,<br>RUN = **-1**: Delete master-network. |
| | | | **H** | Activate, but hold task until released. |
| | | | **I** | Set run number initial value.<br>The next network run will use the next run number available after the number entered.<br>The run number must be between 0 and the highest run number permitted. |
| | | | **J** | Modify the start time of an active job. |
| | | | **R** | Release activation. |
| | | | **2** | Like **R**, but time frame as defined in schedule is used. |
| | | | **S** | Repetition of an active job. |
| | | | **X** | Network or job existence test only. |

| | | | | |
|---|---|---|---|---|
| RC | N03 | out | **Return code:** | |
| | | | **0** | Ok |
| | | | **1** | Owner, network, job not found. |
| | | | **2** | Activation entry not found. |
| | | | **3** | Network not active. |
| | | | **4** | Job cannot not be restarted. |
| | | | **5** | Run number has already been used. |
| | | | **6** | Run number not in valid range. |
| | | | **7** | No free run number. |
| | | | **101** | Invalid function code. |
| | | | **102** | Parameters missing. |
| | | | **111** | Symbol table name contained reserved prefix =EOR=. |
| | | | **901** | OK; sub-network symbol prompting. |
| OWNER | A10 | in | Owner of the job network.<br>**Note:**<br>If a job is placed in 'Hold' status by means of the function **H**, this will be written to the log. | |
| NETWORK | A10 | in | The job network. | |
| JOB | A10 | in | Job. If empty, whole network is activated, deactivated or tested. | |
| SYMBOL-TABLE | A10 | in | The special symbol table to be used for this activation. If empty, the symbol table from the network or job definition is used. | |
| START-TIME | T | in | If zero (**0**), the network is activated immediately. Otherwise, the network is activated at the designated time. The field can contain a date and the time. | |
| | | out | Start time actually set. | |
| RUN | P13 | | Run number used by Entire Operations. | |
| | | in | Functions **A**, **H**:<br>● When activating a single job, a existing run number can be entered. This should only be used for **post activations** of an active network.<br>Functions **C**, **D**, **R**, **S**:<br>● must be an existing run number of the job network.<br>Function **X**:<br>● If **0**, the master network is tested. Otherwise, an active network with this run number is tested. | |
| | | out | Functions **A**, **H**:<br>● If **0**, the next free run number is assigned.<br>● If not **0**, this number is used; if this number is still active, the next free number in ascending order is used. | |

 Copyright © Software AG 2003

**Note:**
You can use this function from outside Entire Operations, as well as from user routines within Entire Operations. This function is comparable to the manual activation of networks or jobs in the Entire Operations online system.

# Activation with Symbol Modification

**To activate a job or network and pass specific symbol values to this activation, proceed as follows**

1. Activate the network and keep it in hold, with function **H**.
2. Use the returned run number to set symbols in the active symbol table(s) for this run. You must call the routine NOPUSY4N (see the subsection Accessing Entire Operations Symbols).
3. After setting the symbol(s), release this activation with the **R** function.

   **Note:**
   Active symbols, which are set here, will not be overwritten by a subsequent complete symbol table activation.

# Writing Messages to the SAT Log

You can write messages to the SAT log file. The messages will be written with the product identifier of NOP so that they will appear in the NOP log display.

Please use the following statement:

```
CALLNAT 'NOPULW8N'
    P-TASK-ID P-MESSAGE-CODE P-MESSAGE P-DBENV P-OWNER P-NETWORK P-RUN P-JOB P-JOB-ID
    P-LOG-TARGET P-USE-NAT-MSG-CACHE
```

Meaning of the parameters:

 Copyright © Software AG 2003

| Parameter | Format | Usage | | |
|---|---|---|---|---|
| P-TASK-ID | A08 | in | User ID of person initiating the Entire Operations log messages. This can remain blank, in which case it is supplied with the content of the *USER variable. Entire Operations-internal use: name of the current Monitor task. | |
| P-MESSAGE-CODE | N4 | in | Internal message code (not displayed); used for later message selection. Use message codes in the range **8000-8999** to avoid conflicts with internal messages. | |
| P-MESSAGE | A70 | in | The message text. | |
| P-DBENV | A10 | in | Database environment; can remain blank (for future use). | |
| P-OWNER | A10 | in | Owner; used for later message selection; can remain blank. | |
| P-NETWORK | A10 | in | Network; used for later message selection; can remain blank. | |
| P-RUN | I04 | in | Run number assigned to the message; can remain blank. | |
| P-JOB | A10 | in | Job; used for later message selection; can remain blank. | |
| P-JOB-ID | A10 | in | Operating system job identifier; can remain blank. Numeric values must be right-justified with leading zeros, for example: **0000004711**. | |
| P-LOG-TARGET | A03 | in | This defines where the log message is to be written to. | |
| | | | **NOP** | to the Entire Operations Log (default). |
| | | | **SO** | to the Sysout of the current monitor task or of the batch job. |
| | | | **ALL** | to the Log and to the Sysout. |
| P-USE-NAT-MSG-CACHE | L | in | Use the Natural internal message cache.<br><br>If this routine is called from outside the Entire Operations Monitor, this parameter must be set to **FALSE**, because the Natural message cache is not initialised.<br>If this routine is called from within the Entire Operations Monitor, you may set this parameter to **TRUE**. In case of any problems with this setting, use **FALSE**. | |

The time stamp and the originating Natural user ID are inserted automatically.

This routine is also invoked internally by the other user API routines.

 Copyright © Software AG 2003

# Expanding Message Texts

Entire Operations stores its message texts in the Log file in a language-independent, compressed format.

To read the proper message text, you must use the following routine:

```
CALLNAT 'NOPUMT2N'
    P-APPLIC-ID P-MESSAGE P-USE_NAT_MSG_CACHE
```

Meaning of the parameters:

| Parameter | Format | Usage | |
|---|---|---|---|
| P-APPLIC-ID | A08 | in | Name of the application from which the message is to be taken. |
| P-MESSAGE | A70 | in | The message text. Input: compressed. Output: readable text. |
| P-USE-NAT-MSG-CACHE | L | in | Use the Natural internal message cache.<br><br>If this routine is called from outside the Entire Operations Monitor, this parameter must be set to **FALSE**, because the Natural message cache is not initialised.<br>If this routine is called from within the Entire Operations Monitor, you may set this parameter to **TRUE**. In case of any problems with this setting, use **FALSE** |

**Notes:**

1. Expansion is only necessary if the message text begins with a semicolon ';'.
2. The language of the resulting message text depends on the current value of *LANGUAGE.

# Importing Operating System Jobs into the Active Queue

You can activate a job in Entire Operations together with an existing operating system job number. This is possible if the job was submitted by any application and set to HOLD status.

Use the following statement:

```
CALLNAT 'NOPUJI4N'
   P-FUNCTION P-RC P-OWNER P-NETWORK P-JOB P-RUN P-EXECUTION-NODE P-SYSOUT-NODE
              P-SYSOUT-FILE P-BS2000-MONJV P-JOB-ID-10 P-OS-JOB-NAME
```

Meaning of the parameters:

 Copyright © Software AG 2003

| Parameter | Format | Usage | | |
|---|---|---|---|---|
| P-FUNCTION | A01 | in | Function code: | |
| | | | **I** | Import job, without prerequisite check. |
| | | | **J** | Import job, with prerequisite check. |
| P-RC | N03 | out | Return code: | |
| | | | **0** | Function ok. |
| | | | **101** | Invalid function code. |
| | | | **102** | Parameter(s) missing. |
| The parameters P-OWNER, P-NETWORK, P-JOB and P-RUN are optional. If any of these are empty, IMPORT is used instead as owner, network and/or job name. Entire Operations will try to find a job definition for these values. If a definition is found, the new active job entry is supplied from it. Otherwise, an ad-hoc activation is performed. | | | | |
| P-OWNER | A10 | in | Optional. | |
| P-NETWORK | A10 | in | Optional. | |
| P-JOB | A10 | in | Optional. | |
| P-RUN | P13 | in | Optional. If P-RUN is set to **zero (0)**, Entire Operations assigns a new run number; otherwise, the job is activated under the run number given. Master jobs **for imports with run number** must be defined with the special type R to prevent automatic activation. | |
| P-EXECUTION-NODE | I4 | in | Required.<br><br>**Note:**<br>Format was changed. Previous API version used was N3 in this case. | |
| P-SYSOUT-NODE | I4 | in | Optional.<br>Necessary only if P-SYSOUT-FILE is specified, and if P-SYSOUT-NODE is different from P-EXECUTION-NODE. | |
| P-SYSOUT-FILE | A250 | in | Required for BS2000/OSD, Unix, Windows.<br>File which contains the Sysout. | |
| P-BS2000-MONJV | A250 | in | Optional.<br>BS2000/OSD monitor job variable.<br>Specify this parameter only for BS2000/OSD, and only if the job was started in conjunction with a monitor job variable. | |
| P-JOB-ID-10 | A10 | in | Required.<br>The Job Id can be passed leftbound in this field, regardless whether it is numeric or alphanumeric.<br><br>**Note:**<br>Format was changed. Previous API version used was A5 in this case. | |
| P-OS-JOB-NAME | A08 | in | Optional; from operating system. | |

# Display of Long Texts for Symbol Prompting

You can display the symbol prompting long text for a specified symbol by using the following statement in your Natural application:

```
CALLNAT 'NOPUSP1N'
    P-OWNER P-SYMBOL-TABLE P-SYMBOL-NAME P-RC P-PROMPT-TEXT
```

Meaning of the parameters:

| Parameter | Format | Usage | | |
|---|---|---|---|---|
| P-OWNER | A10 | in | Owner of the symbol table. | |
| P-SYMBOL-TABLE | A10 | in | Name of the symbol table. | |
| P-SYMBOL-NAME | A20 | in | Name of the prompted symbol. | |
| P-RC | N03 | out | Return code: | |
| | | | **0** | Function ok. |
| | | | **1** | Symbol not found. |
| | | | **111** | Symbol table name begins with reserved prefix =EOR=. |
| P-PROMPT-TEXT | A70/1:5 | out | Symbol prompting long text (maximum 350 bytes). | |

 Copyright © Software AG 2003

# Generating Sysout File Names for BS2000/OSD

This subsection covers the following topics:


- Generating Sysout File Names for BS2000/OSD
- Rules for Exit Coding
- Use with Work File Deletion
- Example


## Generating Sysout File Names for BS2000/OSD

The exit NOPFB2-N **may** be copied into the library SYSEOR to enable the user-defined generation of sysout file names in BS2000. Only **one** instance of this exit exists in the system and it is executed only if it is present. Otherwise, standard name generation is used.

This exit is called with the parameter list NOPXPL-A, so the first line of the exit must be:

```
DEFINE DATA PARAMETER USING NOPXPL-A
```

Meaning of the parameters in NOPXPL-A:

| Parameter | Format | Use | | |
|---|---|---|---|---|
| P-CALL-PLACE | A03 | in | Constant ’FSB’ (Filename Sysout BS2000). | |
| P-RC | N04 | out | Return code: | |
| | | | **0** | Function ok (name generation ok) |
| | | | **1** | A name could not be generated.<br>The default name routine of Entire Operations is to be called. |
| | | | **2** | A name could not be generated.<br>The action (activation) is to be canceled. |
| | | | If activation is canceled by means of the name routine,<br>a corresponding log entry will be written. | |
| P-RT | A66 | out | Return code (not evaluated). | |
| P-OWNER | A10 | in | Network owner. | |
| P-NETWORK | A10 | in | Job network. | |
| P-JOB | A10 | in | Job. | |
| P-RUN | P13 | in | Run number. | |
| P-ACTIVATION-TIME | T | in | Activation time of the network. | |
| P-EXECUTION-NODE | N03 | in | Entire System Server execution node. | |
| P-EXECUTION-OPSYS | A08 | in | Operating system of Entire System Server node. | |
| P-SYMBOL-TABLE | A10 | in | Name of the defined symbol table. | |
| P-FSB-OBJECT-TYPE | A05 | in | File type: | |
| | | | **SO-C** | Current sysout file. |
| | | | **SO-P** | Previous sysout file. |
| | | | **SO-P1** | Previous sysout file without user ID. |
| | | | **SO-A** | All sysout files of a job. |
| P-FSB-USERID | A08 | in | BS2000 user ID. | |
| P-FSB-CATID | A04 | in | BS2000 Cat ID. | |
| P-FSB-SUFFIX | A02 | in | BS2000 suffix. | |
| P-SYSOUT-FILE | A54 | out | Generated file name. | |

# Rules for Exit Coding

- File names must be created which are unique system-wide. Otherwise, the proper running ofEntire Operationsis no longer possible.
- File names which are unique system-wide can be produced by using the fields P-OWNER, P-NETWORK, P-RUN, P-JOB and P-FSB-SUFFIX simultaneously.
- You must be able to process all of the object types defined above.
- Except for the object type SO-P1, a fully-qualified file name must be created which includes the BS2000 user ID.
- A wildcard file entry valid for all sysout files of an active job must be created for the type SO-A. This type

 Copyright © Software AG 2003

is used for deleting files.

- The field P-FSB-SUFFIX is transferred and must be used to differentiate sysout files when jobs are repeated. The caller ensures that the suffix for the currently active job is unique. For the object type SO-C, this field is blank.

**Note:**
If no file name is returned, then standard name generation is used.

# Use with Work File Deletion

Even in case of work file deletion (in connection with deactivation or cleanup) this exit is called, if it exists at all. The following will apply in this context:

- At any rate, an attempt is made to also delete work files, which correspond to the default name conventions of Entire Operations, independent of the existence of the exit.
- It is presumed that the exit will generate the run number with exactly 5 digits, which are enclosed by dots:
  - aaa.00000.bbb (example: aaa.01234.bbb)

  For the Entire Operations file search, this pattern is replaced by a wildcard:

  - aaa.00000.bbb --> aaa.*.bbb
- If the name syntax of the exit is modifed, files cannot be found any longer, the names of which have been generated before the modification. It is not recommended to exchange the exit, while active jobs are running in the operating system.

# Example

```
* NOPFB2-N
* EXAMPLE EXIT FOR SYSOUT FILE NAME
*
* MODIFICATIONS:
* 17.05.95 (139240) SYSOUT FILE NAME EXIT                      SN210
* ------------------------------------------------------------------
DEFINE DATA PARAMETER USING NOPXPL-A
END-DEFINE
* ------------------------------------------------------------------
COMPRESS P-OWNER P-NETWORK P-RUN P-JOB
  INTO P-SYSOUT-FILE LEAVING NO SPACE
IF P-FSB-OBJECT-TYPE NE 'SO-P1'
* -- ALL OBJECT TYPES EXCEPT SO-P1  M U S T  HAVE A BS2000 USERID --
  COMPRESS '$' P-FSB-USERID '.' P-SYSOUT-FILE
    INTO P-SYSOUT-FILE LEAVING NO SPACE
END-IF
IF P-FSB-OBJECT-TYPE EQ 'SO-A'
* -- ALL SYSOUT FILES FOR A JOB --
  COMPRESS P-SYSOUT-FILE '*'
    INTO P-SYSOUT-FILE LEAVING NO SPACE
ELSE
  COMPRESS P-SYSOUT-FILE '.S' P-FSB-SUFFIX
    INTO P-SYSOUT-FILE LEAVING NO SPACE
END-IF
RESET P-RC        /* OK
END
```

# Checking Use of BS2000 User IDs

You can use the exit EORUCB1N contained in the library SYSEORU for a user-defined check, if Natural users are allowed to use BS2000 user IDs.

Meaning of the input and output fields:

| Parameter | Format | Use | |
|---|---|---|---|
| P-RC | N04 | out | Return code (not evaluated, should be **0**). |
| P-RT | A70 | out | Return text (not evaluated). |
| P-USER | A08 | in | *USER in Natural. |
| P-BS2000-USERID | A08 | in | BS2000 user ID. |
| P-ACCOUNT | A08 | in | BS2000 account number. |
| P-SUBMIT-PSWD | A08 | in | BS2000 submit password. |

In the following you find the example of the exit EORUCB1N delivered with Entire Operations which you can adapt according to your need. The exit always returns P-RC=0 (authorized).

## Example

```
* NOPFB2-N

END
```

 Copyright © Software AG 2003

# Job Schedule Inquiry and Modification

You can inquire and modify a job schedule by using the following statement in your Natural application:

```
CALLNAT 'NOPUJS1N'
    P-FUNCTION P-RC P-OWNER P-NETWORK P-RUN P-JOB
    P-AVERAGE-TIME P-EARLIEST-START
    P-LATEST-START P-DEADLINE
```

Meaning of the parameters:

| Parameter | Format | Use | |
|---|---|---|---|
| P-FUNCTION | A01 | in | Function code.<br>**N** inquire job schedule for the next job (in alphabetical order).<br>At the end of the list, RC = 1 is returned.<br>**R** inquire job schedule;<br>**S** change job schedule. |
| P-RC | N03 | out | Return code.<br>**0** function OK;<br>**1** owner, network, run number or job not found;<br>**101** invalid function code;<br>**102** parameter missing.<br>**103** earliest start time invalid<br>**104** latest start time invalid<br>**105** end time invalid<br>**106** latest start must be greater than earliest start<br>**107** end time must be greater than latest start<br>**108** job has already been started<br>**109** earliest start must be greater than current time<br>**110** job is in HOLD status. |
| P-OWNER | A10 | in | Owner of the network. |
| P-NETWORK | A10 | in | Job network. |
| P-RUN | P13 | in | Run number.<br>**0** master data are inquired or modified.<br>**else** inquiry or modification is valid for one activation. |
| P-JOB | A10 | in | Job. |
| P-AVERAGE-TIME | I04 | in/ out | Expected run time tenths of a second. |
| P-EARLIEST-START | A14 | in/ out | Earliest possible start time.<br>Format: YYYYMMDDHHIISS |
| P-LATEST-START | A14 | in/ out | Latest possible start time.<br>Format: YYYYMMDDHHIISS |
| P-DEADLINE | A14 | in/ out | Deadline.<br>Format: YYYYMMDDHHIISS |

# Subnetworks: Inquire Calling Job or Called Network

You can use this API to:

- find the current subnetwork for a job of type NET;
- find the current job calling a subnetwork.

Use the following statement:

```
CALLNAT 'NOPUSN1N'
    P-FUNCTION P-RC P-OWNER P-NETWORK P-RUN P-JOB
```

Meaning of the parameters:

| Parameter | Format | Use | | |
|---|---|---|---|---|
| P-FUNCTION | A01 | in | Function code | |
| | | | **C** | Find calling job (available for active subnetworks only). |
| | | | **S** | Find subnetwork. |
| | | | **T** | Find the topmost calling job (available for active subnetworks only).<br><br>This function recursively goes back in the subnetwork hierarchy, until the caller job is no longer part of a subnetwork. |
| P-RC | N03 | out | Return code | |
| | | | **0** | Function OK. |
| | | | **1** | Input object not found. |
| | | | **2** | Wrong job type. |
| | | | **3** | Not a calling job. |
| | | | **101** | Invalid function code. |
| | | | **102** | Parameter missing. |
| P-OWNER | A10 | mod | Owner of the network. | |
| P-NETWORK | A10 | mod | Network. | |
| P-RUN | P13 | mod | Run number.<br>If the function "S" is used for a master job, this parameter must be zero. | |
| P-JOB | A10 | mod | Job. | |

The parameters P-OWNER, P-NETWORK, P-RUN and P-JOB are input and output parameters. They are overwritten with the values found by the API. Therefore the caller must supply these fields with new entries before each new call.

 Copyright © Software AG 2003

# Starting and Stopping the Monitor Activity Log

You can start and stop the monitor activity log using the following calls from your Natural application.

```
CALLNAT 'NOPMLA1N'
P-FUNCTION
```

The parameters have the following meaning:

| Parameter | Format | Use | | |
|---|---|---|---|---|
| P-FUNCTION | A01 | in | Function code: | |
| | | | **Y** | Starting the monitor activity log. |
| | | | **N** | Stopping the monitor activity log. |

The call of this API has the same effect as setting the field Log Monitor Activity in the Monitor Defaults.

This enables you to automatically start and stop the monitor activity log at particular times or on account of specific conditions.

# Entire Operations Version Information

You can use this API to find out the version of Entire Operations. Use the following statement:

```
CALLNAT 'NOPUVI2N'
    P-FUNCTION P-VERSION P-VERSION-DATE P-UPDATE-DATE
```

Meaning of the parameters:

| Parameter | Format | Use | |
|---|---|---|---|
| P-FUNCTION | A01 | in | Function code.<br>**V** Version information. |
| P-VERSION | A08 | out | Version, for example V3.1.1.1. |
| P-VERSION-DATE | A08 | out | Date of version.<br>Format: YYYYMMDD. |
| P-UPDATE-DATE | A08 | out | Date of last updates.<br>Format: YYYYMMDD. |

 Copyright © Software AG 2003

# Example of Use of API-Routines

- Invoking
- Source Code

## Invoking

The Natural program NOPUT1-P can be invoked to find out how API routines react to real data. It shows how to code the calls of the supplied routines, and how to check the return codes.

This is the front end of NOPUT1-P:

```
Entire Operations Application Program Interface

Please Select:
  Network / Job Status       ST                  NOPUST1N
  Above + wait for / error   SW                  NOPUST2N
  Conditions                 CO                  NOPUCN3N
  Resource Master            RM                  NOPURS1N
  Resource Usage             RU                  NOPURE1N
  Symbols                    SY                  NOPUSY4N
  Calendars/Schedules        CS                  NOPUCS1N
  Activation                 AC                  NOPUAC4N
  Job Import                 JI                  NOPUJI4N
  Version Info               VE                  NOPUVI2N
  Symbol Prompt Texts        SP                  NOPUSP1N
  Job Schedule               SC                  NOPUJS1N
  Log Monitor Activity       LM                  NOPMLA1N
  Active Job Statistics      AS                  NOPUAS1N
  Blank or . = End
              ===> __
```

## Source Code

The following is a list of the program NOPUT1-P contained in the Entire Operations library.

```
* NOPUT1-P:

*   Entire Operations: TEST FOR USER ACCESS ROUTINES

*

* FUNCTION:

*   THE Entire Operations USER ACCESS ROUTINES CAN BE INVOKED

*   FROM HERE, AND THEIR BEHAVIOUR CAN BE OBSERVED ON REAL DATA.

*   THE PROGRAM IS MENU-DRIVEN.

*

* MODIFICATIONS:

* 16.02.00 (192108) Function S (resubmit)                  XSISAA321
```

```
* 24.02.00 (190708.2) NOPMLA1N                                  SN321

* 01.03.00 (192559) NOPUAC4N Fct I (set run number start)       SN321

* 08.11.00 (202401) Change start time of Active job         XSISIB321Z2

* 14.03.01 207190   Status of next Job waiting or error     XSETIB411

* 08.06.01 (080601) Active job statistics (NOPUAS1N)           SJU411

* 15.06.01 (210679) NOPUJI4N                                   SJU411

* 17.08.01 E41102   NOPURE1N                                    SN411

* 23.11.01 206882.1 NOPUCN3N                                    SN411

* 08.11.01 E41116.3 Reserved name prefix =EOR=              XSETIB411

* ---------------------------------------------------------------------

DEFINE DATA LOCAL

* -- PARAMETERS FOR FUNCTIONS --

1 C-FUNC           (A1)
1 C-RC             (N3)
1 C-DDBID          (I2)
1 C-DFNR           (I2)
1 C-OBJECT-TYPE    (A1)
1 C-DBENV          (A10)
1 C-OWNER          (A10)
1 C-NETWORK        (A10) INIT <' '>
1 C-JOB            (A10) INIT <' '>           /* (E-0001)
1 C-RUN            (P13)
1 C-RUN-TO         (P13)                      /* 206882.1
1 C-RUN-4          (I04)
1 C-JOB-ID-10      (A10) INIT <' '>           /* 011023
1 C-OS-JOB-NAME    (A8)  INIT <' '>
1 C-EXECUTION-NODE (N3)  INIT <0>             /* (E-0005)
1 C-MOD-USER       (A8)
1 C-MOD-TIME       (T)
1 C-START-TIME     (T)
1 C-CONDITION      (A20)
1 C-COND-TIME-FROM (T)             /* (E-0003)
1 C-COND-TIME-TO   (T)             /* (E-0003)
1 C-SYMBOL-TABLE   (A10)
1 C-SYMBOL-NAME    (A20)
1 C-SYMBOL-FORMAT  (A1)
1 C-SYMBOL-VALUE   (A80)           /* V (111755)
1 REDEFINE C-SYMBOL-VALUE
  2 C-SYMBOL-VALUE-1   (A40)
  2 C-SYMBOL-VALUE-2   (A40)       /* A (111755)
1 C-OBJECT         (A10)           /* (117624)
1 C-DATE-A8        (A08)           /* (117624)
1 C-RESOURCE       (A20)           /* (109309)
1 C-RESOURCE-TYPE  (A01)           /* (109309)
1 C-INIT-QTY-P     (P07.2)         /* (109309)
1 C-QTY-P          (P07.2)         /* (109309)
1 C-QTY-N          (N07.2)
1 C-VERSION        (A08)           /* (920918)
1 C-VERSION-DATE   (A08)           /* (920918)
```

 **Copyright © Software AG 2003**

```
1 C-UPDATE-DATE    (A08)           /* (980728)
1 C-PROMPT-TEXT    (A70/1:5)       /* (146247)
1 C-EARLIEST-START (A14)           /* (183226)
1 REDEFINE C-EARLIEST-START
  2 #EARLIEST-START (T)
1 C-LATEST-START   (A14)           /* (183226)
1 C-DEADLINE       (A14)           /* (183226)
1 C-AVERAGE-TIME   (I04)           /* (183226)
1 C-STATUS-TIME    (A14)           /* 207190
1 C-BS2000-MONJV   (A250)          /* SJU 01-06-15 (210679) V
1 REDEFINE C-BS2000-MONJV
  2 C-BS2000-MONJV-54 (A54)
1 C-SYSOUT-FILE    (A250)
1 REDEFINE C-SYSOUT-FILE
  2 C-SYSOUT-FILE-54  (A54)
1 C-JI-EXEC-NODE   (I04)
1 C-SYSOUT-NODE    (I04)           /* SJU 01-06-15 (210679) A
1 C-DEALLOCATION   (A01)
1 C-CONFIRM        (A01)           /* 206882.1
1 C-JCL-CHECK      (A01)           /* 206882.1
1 C-JOB-EXECUTED   (L)             /* E41102
*
1 #START-TIME      (A14)           /* YYYYMMDDHHIISS
1 #DATE-FROM       (D)             /* (E-0003)
1 #DATE-TO         (D)             /* (E-0003)
1 #OP              (A2)
1 #RT              (A50)
1 #LFILE-SET       (L)       INIT *
* -- NAMES OF USER ROUTINES --
*
1 #PRG-SYM  (A8) CONST <'NOPUSY4N'>
1 #PRG-COND (A8) CONST <'NOPUCN3N'>          /* 206882.1
1 #PRG-LOG  (A8) CONST <'NOPULW4N'>
1 #PRG-SDA  (A8) CONST <'NOPUSD2N'>
1 #PRG-ACT  (A8) CONST <'NOPUAC4N'>
1 #PRG-JI   (A8) CONST <'NOPUJI4N'>
1 #PRG-CS   (A8) CONST <'NOPUCS1N'>
1 #PRG-RSC  (A8) CONST <'NOPURS1N'>
1 #PRG-RU   (A8) CONST <'NOPURE1N'>          /* E41102
1 #PRG-VERS (A8) CONST <'NOPUVI2N'>
1 #PRG-STAT (A8) CONST <'NOPUST1N'>
1 #PRG-PT   (A8) CONST <'NOPUSP1N'>
1 #PRG-SC   (A8) CONST <'NOPUJS1N'>          /* (183226)
1 #PRG-MLA  (A8) CONST <'NOPMLA1N'>          /* (190708.2)
1 #PRG-STE  (A8) CONST <'NOPUST2N'>          /* 207190
1 #PRG-AJS  (A8) CONST <'NOPUAS1N'>          /* (080601)

LOCAL USING NOPUAS1L                         /* (080601)

END-DEFINE

* ---------------------------------------------------------------------

R-SEL. REPEAT
  INPUT 'Entire Operations Application Program Interface'(I)
    // 'Please Select:'
    /  3T 'Network / Job Status'
    30T 'ST'(I) 50T #PRG-STAT (AD=OD IP=OFF)
    /  3T 'Above + wait for / error'                  /* 207190
    30T 'SW'(I) 50T #PRG-STE  (AD=OD IP=OFF)          /* 207190
    /  3T 'Conditions'    30T 'CO'(I) 50T #PRG-COND (AD=OD IP=OFF)
    /  3T 'Resource Master'
```

```
    30T 'RM'(I) 50T #PRG-RSC  (AD=OD IP=OFF)
    /  3T 'Resource Usage'
    30T 'RU'(I) 50T #PRG-RU   (AD=OD IP=OFF)
    /  3T 'Symbols'       30T 'SY'(I) 50T #PRG-SYM  (AD=OD IP=OFF)
    /  3T 'Calendars/Schedules'
    30T 'CS'(I) 50T #PRG-CS   (AD=OD IP=OFF)
    /  3T 'Activation'    30T 'AC'(I) 50T #PRG-ACT  (AD=OD IP=OFF)
    /  3T 'Job Import'    30T 'JI'(I) 50T #PRG-JI   (AD=OD IP=OFF)
    /  3T 'Version Info'  30T 'VE'(I) 50T #PRG-VERS (AD=OD IP=OFF)
    /  3T 'Symbol Prompt Texts' 30T 'SP'(I) 50T #PRG-PT   (AD=OD IP=OFF)
    /  3T 'Job Schedule'  30T 'SC'(I) 50T #PRG-SC   (AD=OD IP=OFF)
    /  3T 'Log Monitor Activity'
    30T 'LM'(I) 50T #PRG-MLA  (AD=OD IP=OFF)

* sju 01-06-08 next line added (080601)

    /  3T 'Active Job Statistics' 30T 'AS'(I) 50T #PRG-AJS(AD=OD IP=OFF)
    /  3T 'Blank or . = End'
    /  15T '===>' #OP (AD=AIT'_')
*
  IF #OP = ' ' OR = '.'  ESCAPE ROUTINE  END-IF
*
  DECIDE ON FIRST VALUE OF #OP
    VALUE ' '  ESCAPE ROUTINE
*
    VALUE 'AC'       /* -- ACTIVATION --
      RESET C-RC #RT
      R-ACT. REPEAT
        INPUT 'Activation'(I) #PRG-ACT  (AD=OD IP=OFF)
          // 'Function       ==> ' C-FUNC (AD=MIT'_')
          '(A,1 activate, H act. with hold, R,2 release,'
          / 24T 'D deactivate, X existence test, S resubmit,'  /* 192108
          / 24T 'C change activation time, I run number start,'
          / 24T 'J change job start time, '' '' end)'      /* 202401
          /  'Owner          ==> ' C-OWNER         (AD=MIT'_')
          /  'Network        ==> ' C-NETWORK       (AD=MIT'_')
          /  'Job            ==> ' C-JOB           (AD=MIT'_')
          /  'Run Number     ==> ' C-RUN   (AD=MILT'_' ZP=OFF)
          '(Functions J,R)'                /* 202401
          /  'Symbol Table   ==> ' C-SYMBOL-TABLE  (AD=MIT'_')
          /  'Start Time     ==> ' #START-TIME     (AD=MIT'_')
          '(YYYYMMDDHHIISS)'
          // 'Return Code    ==> ' C-RC  (AD=OD) ' ' #RT (AD=OD)
        IF C-FUNC = ' ' OR = '.' ESCAPE BOTTOM (R-ACT.)  END-IF
*       IF #START-TIME NE ' '           /* V (111107)
        IF #START-TIME = MASK(YYYYMMDD00:2300:5900:59)   /* 188167
          MOVE EDITED #START-TIME TO C-START-TIME (EM=YYYYMMDDHHIISS)
        ELSE
          RESET C-START-TIME
        END-IF                          /* A (111107)
        CALLNAT #PRG-ACT
          C-FUNC C-RC C-OWNER C-NETWORK C-JOB C-SYMBOL-TABLE
          C-START-TIME C-RUN
        END TRANSACTION
*
        DECIDE ON FIRST VALUE OF C-RC
          VALUE   0 MOVE 'ok'                        TO #RT
          VALUE   1 MOVE 'owner, net, job not found'  TO #RT
          VALUE   2 MOVE 'activation entry not found' TO #RT
          VALUE   3 MOVE 'network, job not active'    TO #RT
          VALUE   4                                      /* 180719.2
            MOVE 'job can not be resubmitted'    TO #RT  /* 180719.2
```

 **Copyright © Software AG 2003**

```
          VALUE   5                                       /* 188167
            MOVE 'run number already used'       TO #RT  /* 188167
          VALUE   6                                       /* 192559
            MOVE 'run number not in range'       TO #RT  /* 192559
          VALUE 101 MOVE 'invalid function code'     TO #RT
          VALUE 102 MOVE 'parameter(s) missing'      TO #RT
          VALUE 111 MOVE 'Reserved NOP prefix used'  TO #RT /* E41116.3
          NONE VALUE
            COMPRESS 'response' C-RC INTO #RT
        END-DECIDE
        IF C-START-TIME = 0                        /* V 187483
          RESET #START-TIME
        ELSE                                       /* A 187483
          MOVE EDITED C-START-TIME (EM=YYYYMMDDHHIISS) TO #START-TIME
        END-IF                                     /* 187483
      END-REPEAT                         /* A (E-0001)
*
    VALUE 'CO'       /* -- CONDITIONS --
      RESET C-RC #RT
      R-COND. REPEAT
        INPUT 'Condition Handling'(I) #PRG-COND (AD=OD IP=OFF)
          // 'Function         ==> ' C-FUNC (AD=MIT'_')
          '(S set, R reset, T test, '' '' end)'
          /  'Owner            ==> ' C-OWNER         (AD=MIT'_')
          /  'Network          ==> ' C-NETWORK       (AD=MIT'_')
          /  'Condition        ==> ' C-CONDITION     (AD=MIT'_')
          /  'Run Number from  ==> ' C-RUN
          (NL=5 ZP=OFF AD=MILT'_')
          /  'Run Number to    ==> ' C-RUN-TO     /* 206882.1
          (NL=5 ZP=OFF AD=MILT'_')
          /  'F.Date YYYYMMDD  ==> '         /* 174441
          #DATE-FROM (AD=MIT'_' EM=YYYYMMDD) /* 174441
          /  'F.Time HH:II:SS  ==> ' C-COND-TIME-FROM
          (AD=MIT'_' EM=HH':'II':'SS)
          /  'T.Date YYYYMMDD  ==> '         /* 174441
          #DATE-TO   (AD=MIT'_' EM=YYYYMMDD) /* 174441
          /  'T.Time HH:II:SS  ==> ' C-COND-TIME-TO
          (AD=MIT'_' EM=HH':'II':'SS)
          /  'conf. deletions  ==> ' C-CONFIRM  (AD=MIT'_')
          '(Y/N)'
          /  'JCL check only   ==> ' C-JCL-CHECK  (AD=MIT'_')
          '('' ''/C)'
          // 'Return Code    ==> ' C-RC (AD=OD) ' ' #RT (AD=OD)
        IF C-FUNC = ' ' OR = '.' ESCAPE BOTTOM (R-COND.)  END-IF
        ADD #DATE-FROM TO C-COND-TIME-FROM     /* (E-0003)
        ADD #DATE-TO   TO C-COND-TIME-TO       /* (E-0003)
        CALLNAT #PRG-COND
          C-FUNC C-RC C-OWNER
          C-NETWORK C-CONDITION
          C-RUN   C-RUN-TO (AD=O)                /* 206882.1
          C-COND-TIME-FROM
          C-COND-TIME-TO
          C-CONFIRM (AD=O) C-JCL-CHECK (AD=O)    /* 206882.1
        END TRANSACTION
*
        DECIDE ON FIRST VALUE OF C-RC
          VALUE   0 MOVE 'ok'                      TO #RT
          VALUE   1 MOVE 'condition not found'     TO #RT
          VALUE   2 MOVE 'date or run required'    TO #RT
          VALUE 101 MOVE 'invalid function code'   TO #RT
          VALUE 102 MOVE 'condition name missing'  TO #RT
          VALUE 103 MOVE 'invalid date'            TO #RT
```

```
          VALUE 104 MOVE 'network missing'         TO #RT
          NONE VALUE
            COMPRESS 'response' C-RC INTO #RT
        END-DECIDE
      END-REPEAT
*
    VALUE 'CS'       /* -- Calendars / schedules --
      RESET C-RC #RT
      R-CA. REPEAT
        INPUT 'Calendars/Schedules'(I) #PRG-CS (AD=OD IP=OFF)
          // 'Function         ==> ' C-FUNC (AD=MIT'_')
          '(S set, R reset, T test, N next, P previous'
          / 26T '1 set all, 2 reset all'
          / 26T 'C used calendar, D used schedule, '' '' end)'
          /  'Object Type      ==> ' C-OBJECT-TYPE   (AD=MIT'_')
          '(C calendar, S schedule, H schedule history)'
          /  'Owner            ==> ' C-OWNER         (AD=MIT'_')
          /  'Object           ==> ' C-OBJECT        (AD=MIT'_')
          /  'Date             ==> ' C-DATE-A8       (AD=MIT'_')
          '(YYYYMMDD)'
          // 'Return Code    ==> ' C-RC (AD=OD) ' ' #RT (AD=OD)
        IF C-FUNC = ' ' OR = '.' ESCAPE BOTTOM (R-CA.)  END-IF
        CALLNAT #PRG-CS
          C-FUNC C-RC C-OBJECT-TYPE C-OWNER
          C-OBJECT C-DATE-A8
        END TRANSACTION
*
        DECIDE ON FIRST VALUE OF C-RC
          VALUE   0 MOVE 'ok; date is set'                TO #RT
          VALUE   1 MOVE 'date is not set'                TO #RT
          VALUE   2 MOVE 'object not found'               TO #RT
          VALUE 101 MOVE 'invalid function code'          TO #RT
          VALUE 102 MOVE 'parameter(s) missing'           TO #RT
          VALUE 103 MOVE 'invalid parameter combination'  TO #RT
          VALUE 104 MOVE 'invalid object type'            TO #RT
          VALUE 105 MOVE 'invalid date'                   TO #RT
          VALUE 106 MOVE 'table of explicit dates full'   TO #RT
          NONE VALUE
            COMPRESS 'response' C-RC INTO #RT
        END-DECIDE
      END-REPEAT
*
    VALUE 'JI'       /* -- JOB IMPORT --
      RESET C-RC #RT
      R-JI. REPEAT
        INPUT 'Job Import'(I) #PRG-JI   (AD=OD IP=OFF)
          // 'Function       ==> ' C-FUNC (AD=MIT'_')
          25T '(I import without prerequisite check'       /* 162947
          / 26T 'J import with prerequisite check'     /* 162947
          / 26T ''' '' end)'                           /* 162947
          /  'Owner          ==> ' C-OWNER          (AD=MIT'_')
          /  'Network        ==> ' C-NETWORK        (AD=MIT'_')
          /  'Job            ==> ' C-JOB            (AD=MIT'_')
          /  'Run            ==> ' C-RUN            (AD=MILT'_')
          /  'Execution Node ==> ' C-JI-EXEC-NODE   (AD=MILT'_')
          /  'Job Id         ==> ' C-JOB-ID-10      (AD=MIT'_')
          /  'OS Job Name    ==> ' C-OS-JOB-NAME    (AD=MIT'_')

* SJU 01-06-15 (210679) START INSERTING

          /  'Sysout File    ==> ' C-SYSOUT-FILE-54 (AD=MIT'_')
          /  'Sysout Node    ==> ' C-SYSOUT-NODE  (AD=MILT'_')
```

 **Copyright © Software AG 2003**

```
          /  'BS2000 Job Var ==> ' C-BS2000-MONJV-54 (AD=MIT'_')

* SJU 01-06-15 (210679) END   INSERTING

          // 'Return Code    ==> ' C-RC (AD=OD) ' ' #RT (AD=OD)
        IF C-FUNC = ' ' OR = '.' ESCAPE BOTTOM (R-JI.)  END-IF
        CALLNAT #PRG-JI
          C-FUNC C-RC C-OWNER C-NETWORK C-JOB C-RUN
*         C-EXECUTION-NODE C-JOB-ID C-OS-JOB-NAME

* SJU 01-06-15 (210679) ABOVE LINE OUT, NEXT 2 IN

          C-JI-EXEC-NODE C-SYSOUT-NODE C-SYSOUT-FILE
          C-BS2000-MONJV C-JOB-ID-10 C-OS-JOB-NAME

        END TRANSACTION
*
        DECIDE ON FIRST VALUE OF C-RC
          VALUE   0 MOVE 'ok'                        TO #RT
          VALUE   1 MOVE 'owner, net, job not found' TO #RT
          VALUE 101 MOVE 'invalid function code'     TO #RT
          VALUE 102 MOVE 'parameter(s) missing'      TO #RT
          NONE VALUE
            COMPRESS 'response' C-RC INTO #RT
        END-DECIDE
      END-REPEAT
*
    VALUE 'RM'       /* -- Resource Master --
      RESET C-RC #RT
      R-RSC. REPEAT
        INPUT 'Resource Master'(I) #PRG-RSC  (AD=OD IP=OFF)
          // 'Function       ==> ' C-FUNC (AD=MIT'_')
          '(A add, D delete, M modify, T test, '' '' end)'
          /  'Node           ==> ' C-EXECUTION-NODE (AD=MILT'_')
          /  'Resource       ==> ' C-RESOURCE       (AD=MIT'_')
          /  'Type           ==> ' C-RESOURCE-TYPE  (AD=MIT'_')
          /  'Init. Qty.     ==> ' C-INIT-QTY-P     (AD=MILT'_')
          /  'Quantity       ==> ' C-QTY-P          (AD=MILT'_')
          // 'Return Code    ==> ' C-RC (AD=OD) ' ' #RT (AD=OD)
        IF C-FUNC = ' ' OR = '.' ESCAPE BOTTOM (R-RSC.)  END-IF
        CALLNAT #PRG-RSC
          C-FUNC C-RC C-EXECUTION-NODE C-RESOURCE C-RESOURCE-TYPE
          C-INIT-QTY-P C-QTY-P
        END TRANSACTION
*
        DECIDE ON FIRST VALUE OF C-RC
          VALUE   0 MOVE 'ok'                        TO #RT
          VALUE   1 MOVE 'resource not found'        TO #RT
          VALUE   2 MOVE 'resource existing'         TO #RT
          VALUE   3 MOVE 'inconsistent values'       TO #RT
          VALUE 101 MOVE 'invalid function code'     TO #RT
          VALUE 102 MOVE 'parameter(s) missing'      TO #RT
          NONE VALUE
            COMPRESS 'response' C-RC INTO #RT       /* (118671)
        END-DECIDE
      END-REPEAT         /* R-RSC.
*
    VALUE 'RU'       /* -- Resource Usage --           /* V E41102
      RESET C-RC #RT
      C-JOB-EXECUTED := TRUE
      R-RU. REPEAT
        INPUT 'Resource Usage'(I) #PRG-RU   (AD=OD IP=OFF)
```

```
          // 'Function       ==> ' C-FUNC (AD=MIT'_')
          / 20X '(A add,'
          / 20X ' R rel.normal, N rel.network, F rel.forced,'
          / 20X ' '' '' end)'
          /  'DbEnv          ==> ' C-DBENV          (AD=MIT'_')
          /  'Owner          ==> ' C-OWNER          (AD=MIT'_')
          /  'Network        ==> ' C-NETWORK        (AD=MIT'_')
          /  'Run            ==> ' C-RUN-4     (NL=5 AD=MILT'_')
          /  'Job            ==> ' C-JOB            (AD=MIT'_')
          /  'Resource       ==> ' C-RESOURCE       (AD=MIT'_')
          /  'Quantity       ==> ' C-QTY-N          (AD=MILT'_')
          /  'Deallocation   ==> ' C-DEALLOCATION   (AD=MIT'_')
          '(J after job term, N after nw term, K keep)'
          /  'Job executed   ==> ' C-JOB-EXECUTED
          (AD=MIT'_' EM=N/Y)
          // 'Return Code    ==> ' C-RC (AD=OD) ' ' #RT (AD=OD)
        IF C-FUNC = ' ' OR = '.' ESCAPE BOTTOM (R-RU.)  END-IF
        CALLNAT #PRG-RU
          C-FUNC C-RC C-DBENV C-OWNER C-NETWORK C-RUN-4 C-JOB
          C-RESOURCE C-QTY-N C-DEALLOCATION C-JOB-EXECUTED
        END TRANSACTION
*
        DECIDE ON FIRST VALUE OF C-RC
          VALUE   0 MOVE 'ok'                          TO #RT
          VALUE   1 MOVE 'job active not found'        TO #RT
          VALUE   2 MOVE 'res. not defined for job'    TO #RT
          VALUE   3 MOVE 'res. definition not found'   TO #RT
          VALUE   4 MOVE 'quantity not available'      TO #RT
          VALUE 101 MOVE 'invalid function code'       TO #RT
          VALUE 102 MOVE 'parameter(s) missing'        TO #RT
          VALUE 103 MOVE 'wildcard not allowed'        TO #RT
          VALUE 104 MOVE 'deallocation wrong'          TO #RT
          NONE VALUE
            COMPRESS 'response' C-RC INTO #RT       /* (118671)
        END-DECIDE
      END-REPEAT                          /* A (109309)
*
    VALUE 'ST'       /* -- network / job status --
      RESET C-RC #RT
      R-STAT. REPEAT
        INPUT 'Network / Job Status'(I) #PRG-STAT (AD=OD IP=OFF)
          // 'Function       ==> ' C-FUNC (AD=MIT'_')
          '(S status, N status of next, R get latest run'
          / 24T 'A get next run, Y get symbol table, '' '' end)'
          /  'Owner          ==> ' C-OWNER         (AD=MIT'_')
          /  'Network        ==> ' C-NETWORK       (AD=MIT'_')
          /  'Run            ==> ' C-RUN
          (NL=5 ZP=OFF AD=MILT'_')
          /  'Job            ==> ' C-JOB           (AD=MIT'_')
          /  'Symbol Table   ==> ' C-SYMBOL-TABLE  (AD=OD)
          // 'Return Code    ==> ' C-RC (AD=OD) ' ' #RT (AD=OD)
        IF C-FUNC = ' ' OR = '.'  ESCAPE BOTTOM (R-STAT.)  END-IF
        CALLNAT #PRG-STAT
          C-FUNC C-RC C-OWNER C-NETWORK C-JOB C-RUN
          C-SYMBOL-TABLE
        END TRANSACTION
*
        DECIDE ON FIRST VALUE OF C-RC
          VALUE 0   MOVE 'function performed'        TO #RT
          VALUE 1   MOVE 'network/job not found'     TO #RT
          VALUE 20  MOVE 'to be activated'           TO #RT
          VALUE 21  MOVE 'waiting for activation'    TO #RT
```

 **Copyright © Software AG 2003**

```
          VALUE 25  MOVE 'waiting for prerequisite'  TO #RT
          VALUE 26  MOVE 'one or more jobs in hold'  TO #RT
          VALUE 41  MOVE 'executing'                 TO #RT
          VALUE 65  MOVE 'all jobs ended ok'         TO #RT
          VALUE 66  MOVE 'any job ended not ok'      TO #RT
          VALUE 69  MOVE 'any permanent error'       TO #RT
          VALUE 93  MOVE 'awaiting deactivation'     TO #RT
          VALUE 101 MOVE 'invalid function code'     TO #RT
          VALUE 102 MOVE 'parameter(s) missing'      TO #RT
          NONE VALUE
            COMPRESS 'response' C-RC INTO #RT       /* (118671)
        END-DECIDE
        END TRANSACTION           /* (103331)
      END-REPEAT
*
    VALUE 'SW'       /* -- next Job wait Status /Error --  V 207190
      RESET C-RC #RT
      R-STSW. REPEAT
        INPUT 'Next Job wait status / error'(I) #PRG-STE (AD=OD IP=OFF)
          // 'Function       ==> ' C-FUNC (AD=MIT'_')
          '(S Status, N Status of next, '
          / 24T 'W Next Job wait status / error, R get latest run'
          / 24T 'A get next run, Y get symbol table, '' '' end)'
          /  'Owner          ==> ' C-OWNER         (AD=MIT'_')
          /  'Network        ==> ' C-NETWORK       (AD=MIT'_')
          /  'Run            ==> ' C-RUN
          (NL=5 ZP=OFF AD=MILT'_')
          /  'Job            ==> ' C-JOB           (AD=MIT'_')
          /  'Symbol Table   ==> ' C-SYMBOL-TABLE  (AD=OD)
          /  'Job ID         ==> ' C-JOB-ID-10     (AD=OD)
          /  'Status Time    ==> ' C-STATUS-TIME   (AD=OD)
          // 'Return Code    ==> ' C-RC (AD=OD) ' ' #RT (AD=OD)
        IF C-FUNC = ' ' OR = '.'  ESCAPE BOTTOM (R-STSW.)  END-IF
        CALLNAT #PRG-STE
          C-FUNC C-RC C-OWNER C-NETWORK C-JOB C-RUN
          C-SYMBOL-TABLE C-JOB-ID-10 C-STATUS-TIME
        END TRANSACTION
*
        DECIDE ON FIRST VALUE OF C-RC
          VALUE 0   MOVE 'function performed'              TO #RT
          VALUE 1   MOVE 'network/job not found'           TO #RT
          VALUE 20  MOVE 'to be activated'                 TO #RT
          VALUE 21  MOVE 'waiting for activation'          TO #RT
          VALUE 25  MOVE 'waiting for prerequisite'        TO #RT
          VALUE 26  MOVE 'one or more jobs in hold'        TO #RT
          VALUE 27  MOVE 'Wait for next action/start time' TO #RT
          VALUE 28  MOVE 'Wait for Condition'              TO #RT
          VALUE 29  MOVE 'Wait for Resource'               TO #RT
          VALUE 30  MOVE 'Wait for Opsys Server'           TO #RT
          VALUE 31  MOVE 'JCL to be loaded'                TO #RT
          VALUE 32  MOVE 'NW activation error'             TO #RT
          VALUE 33  MOVE 'Job activation error'            TO #RT
          VALUE 34  MOVE 'Symbol replacement error'        TO #RT
          VALUE 35  MOVE 'Any Extraction+Activation error' TO #RT
          VALUE 36  MOVE 'Job submission'                  TO #RT
          VALUE 37  MOVE 'Job submission error'            TO #RT
          VALUE 38  MOVE 'Job execution'                   TO #RT
          VALUE 39  MOVE 'Job execution error'             TO #RT
          VALUE 41  MOVE 'executing'                       TO #RT
          VALUE 42  MOVE 'End of Job Checking'             TO #RT
          VALUE 43  MOVE 'End of Job Checking error'       TO #RT
          VALUE 44  MOVE 'End of Job Actions'              TO #RT
```

```
          VALUE 45  MOVE 'End of Job Actions error'        TO #RT
          VALUE 65  MOVE 'all jobs ended ok'               TO #RT
          VALUE 66  MOVE 'any job ended not ok'            TO #RT
          VALUE 69  MOVE 'any permanent error'             TO #RT
          VALUE 93  MOVE 'awaiting deactivation'           TO #RT
          VALUE 101 MOVE 'invalid function code'           TO #RT
          VALUE 102 MOVE 'parameter(s) missing'            TO #RT
          NONE VALUE
            COMPRESS 'response' C-RC INTO #RT
        END-DECIDE
        END TRANSACTION
      END-REPEAT                                    /* A 207190
*

    VALUE 'SY'       /* -- SYMBOLS --
      RESET C-RC #RT
      R-SYM. REPEAT
        INPUT 'Symbol Handling'(I) #PRG-SYM (AD=OD IP=OFF)
          // 'Function       ==> ' C-FUNC (AD=MIT'_')
          '(S set, R reset, T test, N next,'
          / 30T 'M add mult, D delete mult, '' '' end)'
          /  'Owner          ==> ' C-OWNER         (AD=MIT'_')
          /  'Network        ==> ' C-NETWORK       (AD=MIT'_')
          '(active only)'
          /  'Run            ==> ' C-RUN
          (NL=5 ZP=OFF AD=MILT'_')
          '(active only)'
          /  'Symbol Table   ==> ' C-SYMBOL-TABLE  (AD=MIT'_')
          /  'Symbol Name    ==> ' C-SYMBOL-NAME   (AD=MIT'_')
          /  'Symbol Format  ==> ' C-SYMBOL-FORMAT (AD=MIT'_')
          /  'Symbol Value   ==> ' C-SYMBOL-VALUE-1  (AD=MI'_')
          /  '                   ' C-SYMBOL-VALUE-2  (AD=MI'_')
          // 'modified       ==> ' C-MOD-USER (AD=OD)
          C-MOD-TIME (AD=OD IP=OFF EM=YY'-'MM'-'DD' 'HH':'II':'SS)
          // 'Return Code    ==> ' C-RC (AD=OD) ' ' #RT (AD=OD)
        IF C-FUNC = ' ' OR = '.'  ESCAPE BOTTOM (R-SYM.)  END-IF
        CALLNAT #PRG-SYM
          C-FUNC C-RC C-OWNER C-NETWORK C-RUN
          C-SYMBOL-TABLE C-SYMBOL-NAME C-SYMBOL-FORMAT C-SYMBOL-VALUE
          C-MOD-USER C-MOD-TIME
        END TRANSACTION
*
        DECIDE ON FIRST VALUE OF C-RC
          VALUE 0   MOVE 'ok'                        TO #RT
          VALUE 1   MOVE 'symbol not found'          TO #RT
          VALUE 2   MOVE 'invalid numeric value'     TO #RT
          VALUE 3   MOVE 'invalid format'            TO #RT
          VALUE 4   MOVE 'format change attempted'   TO #RT
          VALUE 5   MOVE 'mult. table full'          TO #RT /* (103331)
          VALUE 6   MOVE 'value missing'             TO #RT /* (103331)
          VALUE 7   MOVE 'value not found'           TO #RT /* (103331)
          VALUE 10
            #RT := 'rejected by userexit'
          VALUE 11  MOVE 'userexit not found'        TO #RT /* (107759)
          VALUE 12  MOVE 'access denied by userexit' TO #RT /* (E-0029)
          VALUE 20  MOVE 'ok, is multiple value'     TO #RT /* (921229)
          VALUE 30
            #RT := 'ok, master updated too'          /* 158341
          VALUE 101 MOVE 'invalid function code'     TO #RT
          VALUE 102 MOVE 'parameter(s) missing'      TO #RT /* 960301
          VALUE 111 MOVE 'Reserved NOP prefix used'  TO #RT /* E41116.3
          NONE VALUE
```

 Copyright © Software AG 2003

```
            COMPRESS 'response' C-RC INTO #RT       /* (118671)
        END-DECIDE
      END-REPEAT
*
    VALUE 'VE'       /* -- VERSION INFO --
      MOVE 'V' TO C-FUNC
      RESET C-VERSION C-VERSION-DATE
      CALLNAT #PRG-VERS
        C-FUNC C-VERSION C-VERSION-DATE C-UPDATE-DATE
      WRITE 'Entire Operations' C-VERSION
        / 'Version Date     ' C-VERSION-DATE
        / 'Update  Date     ' C-UPDATE-DATE
*
    VALUE 'SP'       /* -- Symbol Prompting 1246247
      RESET C-RC #RT C-PROMPT-TEXT (*)
      R-SYP. REPEAT
        INPUT 'Symbol Prompting'(I) #PRG-PT (AD=OD IP=OFF)
          // 'Owner          ==> ' C-OWNER         (AD=MIT'_')
          /  'Symbol Table   ==> ' C-SYMBOL-TABLE  (AD=MIT'_')
          /  'Symbol Name    ==> ' C-SYMBOL-NAME   (AD=MIT'_')
          // 'Return Code    ==> ' C-RC (AD=OD) ' ' #RT (AD=OD)
          /  'Prompt Text 1  ==> ' C-PROMPT-TEXT (1) (AD=OD)
          /  'Prompt Text 2  ==> ' C-PROMPT-TEXT (2) (AD=OD)
          /  'Prompt Text 3  ==> ' C-PROMPT-TEXT (3) (AD=OD)
          /  'Prompt Text 4  ==> ' C-PROMPT-TEXT (4) (AD=OD)
          /  'Prompt Text 5  ==> ' C-PROMPT-TEXT (5) (AD=OD)
        IF C-OWNER = ' ' OR C-SYMBOL-TABLE = ' '
            OR C-SYMBOL-NAME= ' '
          ESCAPE BOTTOM (R-SYP.)
        END-IF
        CALLNAT #PRG-PT
          C-OWNER C-SYMBOL-TABLE C-SYMBOL-NAME
          C-RC C-PROMPT-TEXT (*)
        END TRANSACTION
*
        DECIDE ON FIRST VALUE OF C-RC
          VALUE 0
            MOVE 'ok'                        TO #RT
          VALUE 1
            MOVE 'symbol not found'          TO #RT
          VALUE 111                                 /* E41116.3
            MOVE 'Reserved NOP prefix used'  TO #RT /* E41116.3
          NONE VALUE
            COMPRESS 'response' C-RC INTO #RT       /* (118671)
        END-DECIDE
      END-REPEAT
*
    VALUE 'SC'                                      /* V 183226 add
      RESET C-RC #RT
      R-SC. REPEAT
        INPUT 'Job schedule'(I) #PRG-SC (AD=OD IP=OFF)
          // 'Function        ==> ' C-FUNC (AD=MIT'_')
          '(R inquire, N inquire next, S change job schedule)'
          /  'Owner           ==> ' C-OWNER     (AD=MIT'_')
          /  'Network         ==> ' C-NETWORK   (AD=MIT'_')
          /  'Run Number      ==> ' C-RUN
          (NL=5 ZP=OFF AD=MILT'_')
          /  'Job             ==> ' C-JOB       (AD=MIT'_')
          //  'Earliest-start  ==> ' C-EARLIEST-START (AD=MIT'_')
          'In/Out (YYYYMMDDHHIISS) Active'
          /  44T '(00000000HHIISS) Master'
          //  'Latest-start    ==> ' C-LATEST-START   (AD=MIT'_')
```

```
          'In/Out (YYYYMMDDHHIISS) Active'
          /  44T '(00000NNNHHIISS) Master'
          //  'Deadline        ==> ' C-DEADLINE       (AD=MIT'_')
          'In/Out (YYYYMMDDHHIISS) Active'
          /  44T '(00000NNNHHIISS) Master'
          //  'Average-time    ==> ' C-AVERAGE-TIME   (ZP=OFF AD=MIT'_')
          '   In(estimated)/Out(average) 1/10 of Second'
          // 'Return-code     ==> ' C-RC (AD=OD) ' ' #RT (AD=OD)
        IF C-FUNC = ' ' OR = '.'
          ESCAPE BOTTOM (R-SC.)
        END-IF
        CALLNAT #PRG-SC C-FUNC (AD=O) C-RC C-OWNER (AD=O)
          C-NETWORK (AD=O) C-RUN (AD=O) C-JOB
          C-AVERAGE-TIME C-EARLIEST-START
          C-LATEST-START C-DEADLINE
*
        DECIDE ON FIRST VALUE OF C-RC
          VALUE   0 MOVE 'ok'                                 TO #RT
          VALUE   1 MOVE 'owner,network,run or job not found' TO #RT
          VALUE 101 MOVE 'invalid function code             ' TO #RT
          VALUE 102 MOVE 'parameter missing                 ' TO #RT
          VALUE 103 MOVE 'Wrong Earliest Start              ' TO #RT
          VALUE 104 MOVE 'Wrong Latest Start                ' TO #RT
          VALUE 105 MOVE 'Wrong Deadline                    ' TO #RT
          VALUE 106 MOVE 'Latest must be> Earliest Start   ' TO #RT
          VALUE 107 MOVE 'Deadline must be> Latest Start   ' TO #RT
          VALUE 108 MOVE 'Job already Submitted             ' TO #RT
          VALUE 109 MOVE 'Earliest must be> Current Time   ' TO #RT
*                                              183994 added
          VALUE 110 MOVE 'Job in Hold                       ' TO #RT
          NONE VALUE
            COMPRESS 'response' C-RC INTO #RT
        END-DECIDE
      END-REPEAT                                     /* A 183226
*
    VALUE 'LM'     /* log monitor activity (Y/N)        /* V 190708.2
      R-LM. REPEAT
        INPUT 'Log monitor activity'(I) #PRG-MLA (AD=OD IP=OFF)
          // 'Function        ==> ' C-FUNC (AD=MIT'_')
          '(Y yes, N no)'
        IF C-FUNC = ' ' OR = '.'
          ESCAPE BOTTOM (R-LM.)
        END-IF
        CALLNAT #PRG-MLA C-FUNC (AD=O)
      END-REPEAT                                     /* A 190708.2
*
    VALUE 'AS'                 /* act job stats sju 01-06-08 (080601) V
      P-FUNCTION:= 'S'
      CALLNAT #PRG-AJS NOPUAS-VERSION NOPUAS-PARMS(*)    /* 011118 SN
      WRITE 'Jobs waiting.......:' P-NUMBER-WAITING
        / 'Jobs in input queue:' P-NUMBER-INPUT-QUEUE
        / 'Jobs held..........:' P-NUMBER-HOLD
        / 'Jobs executing.....:' P-NUMBER-EXECUTING
        / 'Jobs in error......:' P-NUMBER-PERM-ERROR    /* (080601) A
    NONE VALUE
      WRITE 'Invalid Selection'
  END-DECIDE
END-REPEAT
END
```

 **Copyright © Software AG 2003**

# Retrieve Numbers of Active Jobs in Defined Status Ranges

This subsection covers the following topics:

- Function Call
- Description of the Function Codes

## Function Call

You can retrieve the numbers of active jobs in defined status ranges by using the following call:

```
CALLNAT 'NOPUAS1N'
    NOPUAS-VERSION NOPUAS-PARMS
```

In the calling program, please define the parameter list for this API as follows:

```
DEFINE DATA

LOCAL USING NOPUAS1L
```

Meaning of the parameters:

| Parameter | Format | Usage | |
|---|---|---|---|
| NOPUAS-VERSION | A02 | in | Interface version (01). |
| NOPUAS-PARMS | A250 | mod | Parameter area. |
| Redefinition of NOPUAS-PARMS: | | | |
| P-FUNCTION | A01 | in | Function code. |
| P-RC | N03 | out | Return code<br>**0** ok<br>**101** invalid function code<br>**102** parameter(s) missing |
| P-NUMBER-WAITING | I04 | out | Number of jobs waiting. |
| P-NUMBER-HOLD | I04 | out | Number of jobs in hold. |
| P-NUMBER-INPUT-QUEUE | I04 | out | Number of jobs in the input queue. |
| P-NUMBER-EXECUTING | I04 | out | Number of jobs executing. |
| P-NUMBER-PERM-ERROR | I04 | out | Number of jobs in permanent error status. |

## Description of the Function Codes

Meaning of the function codes:

| Code | Description |
|---|---|
| S | Get statistics. |


Copyright © Software AG 2003

# Special Monitor Features and Batch Jobs

This section covers the following topics:

- Monitor Start Network
- Day Start Network
- Common Start Network Considerations
- Cleanup in Batch Mode

---

## Monitor Start Network

- Execution

You can define a job network to be executed **after each Monitor start** and before the activation of any other job.

If a network with the name MON-START is defined under the owner SYSDBA, it is executed at Monitor start time.

### Execution

The start network is intended to run exclusively before any other network. Therefore, the absolute condition MON-START-RUNNING (owner SYSDBA) is set at activation time.

The setting of this condition is automatically taken over by the first job of the start network. This job sets no conditions during end-of-job checking and actions.

**Note:**
The absolute condition MON-START-RUNNING is to be reset, only if the whole start network ends normally. Any other activity of the Monitor is blocked during execution of the start network. If any error occurs in the start network, the whole processing of other networks is blocked until there is a manual intervention. To force the normal processing to start, just reset the condition MON-START-RUNNING manually.

## Day Start Network

- Day Start Execution

You can define a job network to be executed **at the start of each day** and before the activation of any other job.

If a network with the name DAY-START is defined under the owner SYSDBA, it is executed at Monitor start time.

### Day Start Execution

The start network is intended to run exclusively before any other network. Therefore, the absolute condition DAY-START-RUNNING (owner SYSDBA) is set at activation time.

The setting of this condition is automatically taken over by the first job of the start network. This job sets no conditions during end-of-job checking and actions.

**Note:**
The absolute condition DAY-START-RUNNING is to be reset only if the whole start network ends normally. Any other activity of the Monitor is blocked during execution of the start network. If any error occurs in the start

network, the whole processing of other networks is blocked until there is a manual intervention. To force the normal processing to start, just reset the condition DAY-START-RUNNING manually.

# Common Start Network Considerations

- Exclusive Execution
- Use

The considerations in this section apply to the Monitor start network and the day start network.

## Exclusive Execution

While a start network is running, a warning message is repeatedly written to the log.

During the execution of the start network, the following Monitor activities are blocked:

- Schedule extraction
- Activation (except start network)
- Cleanup

**Note:**
The Monitor start network and the day start network can execute in parallel.

## Use

Some possibilities for the use of the start network are:

· Preparation of symbol tables for other networks;

· Activation of other networks;

· Condition setting;

· Any Entire System Server functions.

# Cleanup in Batch Mode

- Parameter for CLEAN
- Example for CLEAN
- Cleanup of Mailbox Messages to SYSDBA
- Parameter for MX-DEL1P
- Example for MX-DEL1P

In addition to an automatic cleanup, or alternatively, you can also do a cleanup of the active database in batch mode outside of the Entire Operations Monitor.

Use a Natural batch job with the following commands:

```
LOGON SYSEOR
CLEAN <function> <log-target>
FIN
```

 Copyright © Software AG 2003

## Parameter for CLEAN

| Use | Name | Description |
|---|---|---|
| function | ALL<br>CLEAN<br>DEACT | Cleanup, deactivation, deletion of work files<br>Cleanup only<br>Deactivation, deletion of work files only |
| log-target | NOP<br>SO<br>ALL | The cleanup is logged in the Entire Operations Log.<br>The cleanup is logged in the Sysout of the batch job.<br>The start and end messages of the cleanup are also logged in the Entire Operations Log.<br>The cleanup is both logged in the Entire Operations Log and the Sysout of the batch job. |

The batch cleanup can take place with the Monitor running or not. It is recommended to do the cleanup at times of low monitor utilization.

Like the automatic cleanup the batch cleanup should be performed at least once a day. Several runs a day are possible. This may be useful to reduce the data amount of each cleanup run.

The Entire Operations retention periods also apply to batch cleanup.

## Example for CLEAN

```
CLEAN ALL SO    complete cleanup, log after Sysout
```

## Cleanup of Mailbox Messages to SYSDBA

The cleanup of mailbox messages to SYSDBA can be executed in batch mode. To do this, use a Natural batch job including the following commands:

```
LOGON SYSEOR
MX-DEL1P <yyyymmdd> <hhiiss>
FIN
```

## Parameter for MX-DEL1P

| Name | Description |
|---|---|
| yyyymmdd | Day up to which cleanup is to take place. |
| hhiiss | Time up to which cleanup is to take place. |

## Example for MX-DEL1P

```
MX-DEL1P 20020201 100000
```

# Special API Routines for NOP

This section covers the following topics:


- Introduction
- Extract Log Data to Log Selection File
- Delete Old Data in Log Selection File
- Output of Log Data to a File
- Print Account Information from NOP Log
- Monitor or Task Wait Time Modification
- Monitor Shutdown
- Monitor Start
- BS2000/OSD Jobs


---

## Introduction


- Required LFILE Assignments
- Log Selection File - Format 1


All programs documented here reside in the Entire Operations Natural library (SYSEOR). If not otherwise stated, all programs may be used in batch and online.

### Required LFILE Assignments

| LFILE | Explanation |
|---|---|
| 216 | Entire Operations System File 1. |
| 131 | SAT Log File. |
| 215 | Entire Operations System File 3 (Log Selection File). |

### Log Selection File - Format 1

An empty log selection file (LFILE=215) for accounting data is part of the NOP142 installation files.

The DDM for the above is EOR-LOG-SELECTION-1.

The DDM is delivered with descriptors on almost every field.
It is up to the user to release descriptors which are not necessary.

The file can be read and evaluated with Natural and Super Natural.

#### DB 255, File 215

This file applies to the default sequence of Entire Operations log selection 1.

 Copyright © Software AG 2003

| T | L | DB | Name | Format | S | D | Remarks |
|---|---|---|---|---|---|---|---|
| * | **EOR Log Selection** | | | | | | |
| | 1 | AA | LGS-RECORD-TYPE | A6 | N | D | |
| * | | | | | | | |
| G | 1 | AB | LGS-BS2-DATA | | | | |
| | 2 | AD | LGS-BS2-USERID | A8 | N | D | |
| | 2 | AE | LGS-BS2-ACCOUNT | A8 | N | D | |
| * | | | | | | | |
| G | 1 | AG | LGS-TIME-DATA | | | | |
| | 2 | AH | LGS-CPU-TIME | P7.2 | N | D | /* in sec. |
| | 2 | AI | LGS-JOB-START | T12 | N | D | /* date + time |
| | 2 | AK | LGS-JOB-STOP | T12 | N | D | /* date + time |
| | 2 | AM | LGS-JOB-ELAPSED | P13.0 | N | D | /* in 1/10 sec. |
| * | | | | | | | |
| G | 1 | AN | LGS-DATA-3 | | | | |
| | 2 | AO | LGS-LOG-TIME | T12 | N | D | /* date + time |
| | 2 | AP | LGS-OWNER | A10 | N | D | |
| | 2 | AQ | LGS-NETWORK | A10 | N | D | |
| | 2 | AR | LGS-RUN | P13.0 | N | D | |
| | 2 | AS | LGS-JOB | A10 | N | D | |
| | 2 | AT | LGS-STATE | A3 | N | D | |
| | 2 | AU | LGS-JOB-TYPE | A3 | N | D | |
| * | | | | | | | |
| | 1 | AY | LGS-EXECUTION-NODE | N3.0 | N | D | |
| | 1 | AW | LGS-JOB-ID | A5 | N | D | |
| | 1 | AX | LGS-OS-JOB-NAME | A8 | N | D | |
| * | | | | | | | |
| * | **Superdescriptors** | | | | | | |
| * | | | | | | | |
| | 1 | AV | LGS-KEY-1 | A30 | N | S | |
| * | | | LGS-OWNER | 1-10 | | | |
| * | | | LGS-NETWORK | 1-10 | | | |
| * | | | LGS-JOB | 1-10 | | | |

# Extract Log Data to Log Selection File

### Natural Program Call:

```
LGAX1S-P P-DATE-FROM P-DATE-TO
```

### Parameters:

| Name | Format | Description |
|---|---|---|
| P-DATE-FROM (optional) | A08 | Start date for the extraction in format YYYMMDD. |
| P-DATE-TO (optional) | A08 | End date for the extraction in format YYYMMDD. |

**Notes:**

1. Start date and end date for the extraction are optional. If wanted, both parameters must be set. If the start date is smaller than the time stamp in the private control record (see note 2 and 3), the extraction is not performed.
2. Log data extraction always starts where the last extraction ended.
3. This time stamp is kept in a private control record. (When the program is started for the first time, the starting date 01.11.2001 is used).
4. The extraction data consists of accounting data (see the subsection Network and Job Accounting Data in the section Reporting).
5. New extraction data do not overwrite existing extraction data.

# Delete Old Data in Log Selection File

### Natural Program Call:

```
 LGAX1D-P  P-RETENTION-DAYS
```

### Parameters:

| Name | Format | Description |
|---|---|---|
| P-RETENTION-DAYS | I2 | Entries older than this parameter are deleted. |

# Output of Log Data to a File

The output of log data for printing or further processing is described in the subsection Output of Log Information in the section Log Information.

# Print Account Information from NOP Log

 Copyright © Software AG 2003

### Natural Program Call:

```
LG-AP1-P  P-TIME-FROM  P-TIME-TO
```

### Parameters:

| Name | Format | Description |
|---|---|---|
| P-TIME-FROM | A14 | Format: YYYYMMDDHHIISS |
| P-TIME-TO | A14 | Format: YYYYMMDDHHIISS |

# Monitor or Task Wait Time Modification

### Natural Program Call:

```
MO-WTM-P  P-MONITOR-WAIT-TIME P-USERID [P-TASK-ID]
```

### Parameters:

| Name | Format | Description |
|---|---|---|
| P-MONITOR-WAIT-TIME | N8 | In seconds. |
| P-USERID | A8 | For log. |
| P-TASK-ID | I2 | Number of a monitor task (optional).<br>If the number of an active monitor task is specified, **only** the wait time of this task will be modified.<br>If no task number is specified, the wait times of **all active monitor tasks** will be modified. |

**Notes:**

1. If a wait time less than 5 seconds is specified, the wait time is set to 5 seconds.
2. The modifications carried out using this program only apply until the end of the current monitor run.

# Monitor Shutdown

### Natural Program Call:

```
MO-SHD-P
```

### Parameters:

None.

# Monitor Start

### Natural Program Call:

```
MO-ST--P P-MONITOR-NODE
```

### Parameter:

| Name | Format | Description |
|---|---|---|
| P-MONITOR | I2 | Value = 1 to 255 (Mainframe) |

# BS2000/OSD Jobs

These jobs are used to update the submit user ID, submit password and account number.

### Natural Program Call:

```
BS2U01-P
     P-OWNER P-USERID-OLD P-PW-OLD P-USERID-NEW P-PW-NEW
     P-ACCOUNT-NEW
```

### Parameters:

| Name | Format | Description |
|---|---|---|
| P-OWNER | A10 | Entire Operations owner of jobs to be modified. |
| P-USERID-OLD | A8 | BS2000 user ID to be exchanged. |
| P-PW-OLD | A8 | BS2000 submit password to be exchanged. |
| P-USERID-NEW | A8 | BS2000 new user ID. |
| P-PW-NEW | A8 | BS2000 new submit password. |
| P-ACCOUNT-NEW | A8 | BS2000 new account number. |

**Notes:**

1. An asterisk * for a parameter is converted to **blank**.
2. Job fields are only exchanged, if the EOR owner, the old BS2000 user ID, and the old submit password do match.
3. Fields are replaced, only if the new value is **not blank**.
4. A log is written to the screen. In batch mode, the log is printed to Natural printer 1. This printer must therefore be assigned in the JCL.

 Copyright © Software AG 2003